AT&T 555-640-111
March 1996

MERLIN LEGEND® Communications System Releases 3.1 and 4.0

System Programming

Copyright © 1996, AT&T
All Rights Reserved
Printed in U.S.A.

AT&T 555-640-111
Issue 1
March 1996

Notice

Every effort was made to ensure that the information in this book was complete and accurate at the time of printing. However, information is subject to change.

See Appendix A, "Customer Support Information," for important information.

Your Responsibility for Your System's Security

Toll fraud is the unauthorized use of your telecommunications system by an unauthorized party, for example, persons other than your company's employees, agents, subcontractors, or persons working on your company's behalf. Note that there may be a risk of toll fraud associated with your telecommunications system, and if toll fraud occurs, it can result in substantial additional charges for your telecommunications services.

You and your System Manager are responsible for the security of your system, such as programming and configuring your equipment to prevent unauthorized use. The System Manager is also responsible for reading all installation, instruction, and system administration documents provided with this product in order to fully understand the features that can introduce risk of toll fraud and the steps that can be taken to reduce that risk. AT&T does not warrant that this product is immune from or will prevent unauthorized use of common-carrier telecommunication services or facilities accessed through or connected to it. AT&T will not be responsible for any charges that result from such unauthorized use. For important information regarding your system and toll fraud, see Appendix A, "Customer Support Information."

Federal Communications Commission Statement

This equipment has been tested and found to comply with the limits for a Class A digital device, pursuant to Part 15 of the FCC Rules. These limits are designed to provide reasonable protection against harmful interference when the equipment is operated in a commercial environment. This equipment generates, uses, and can radiate radio frequency energy and, if not installed and used in accordance with the instruction manual, may cause harmful interference to radio communications. Operation of this equipment in a residential area is likely to cause harmful interference, in which case the user will be required to correct the interference at his own expense. For further FCC information, see Appendix A, "Customer Support Information."

Canadian Department of Communications (DOC) Interference Information

This digital apparatus does not exceed the Class A limits for radio noise emissions set out in the radio interference regulations of the Canadian Department of Communications.

Le Présent Appareil Numérique n'émet pas de bruits radioélectriques dépassant les limites applicables aux appareils numériques de la class A préscrites dans le reglement sur le brouillage radioélectrique édicté par le ministère des Communications du Canada.

Trademarks

5ESS, Accunet, Conversant, Definity, Megacom, MERLIN, MERLIN II, MERLIN LEGEND, Magic On Hold, MultiQuest, PARTNER, and Systimax are registered trademarks and 4ESS, AUDIX Voice Power, FAX Attendant System, HackerTracker, MERLIN MAIL, MERLIN PFC, MLX-10, MLX-10D, MLX-10DP, MLX-16DP, MLX-20L, MLX-28D, PagePac, PagePal, PassageWay, Picasso, and PictureTel are trademarks of AT&T in the U.S. and other countries. NetPROTECT is a service mark of AT&T in the U.S. and other countries.
CLASS is a service mark of Bellcore.
IBM is a registered Trademark of International Business Machines Corportation.
MS-DOS and Microsoft are registered trademarks of Microsoft Corp.
Hayes is a registered trademark of Hayes Microcomputer Products, Inc.
Supra, StarSet, and Mirage are registered trademarks of Plantronics, Inc.
UNIX is a registered trademark of UNIX System Laboratories, Inc.

Ordering Information

Call: AT&T GBCS Publications Fulfillment Center
Voice 1 800 457-1235 International Voice 317 361-5353
Fax 1 800 457-1764 International Fax 317 361-5355

Write: AT&T GBCS Publications Fulfillment Center
P.O. Box 4100
Crawfordsville, IN 47933

Order: Document No. AT&T 555-640-111
Comcode: 107713729
Issue 1, March 1996

For more information about AT&T documents, refer to the section entitled, "Related Documents" in "*About This Book*."

Support Telephone Number

In the continental U.S., AT&T provides a toll-free customer helpline 24 hours a day. Call the AT&T Helpline at **1 800 628-2888** or your AT&T authorized dealer if you need assistance when installing, programming, or using your system. Outside the continental U.S., contact your local AT&T authorized representative.

AT&T Corporate Security

Whether or not immediate support is required, *all* toll fraud incidents involving AT&T products or services *should be reported* to AT&T Corporate Security at **1 800 821-8235**. In addition to recording the incident, AT&T Corporate Security is available for consultation on security issues, investigation support, referral to law enforcement agencies, and educational programs.

AT&T Fraud Intervention

If you *suspect you are being victimized* by toll fraud and you need technical support or assistance, call GBCS National Service Assistance Center at **1 800 628-2888**.

Warranty

AT&T provides a limited warranty on this product. Refer to "Limited Warranty and Limitation of Liability" in Appendix A, "Customer Support Information."

Contents

About this Book

- Intended Audience xvii
- How to Use This Book xvii
- Terms and Conventions Used xviii
- Security xx
- Related Documents xxi
- How to Comment on This Document xxii

1 Programming Basics

- Introduction to System Programming 1–1
- System Programming Console 1–4
- Programming Procedures 1–10
- Access to System Programming from the MLX-20 Console 1–39
- Idle States 1–42
- Product Enhancements 1–45

2 Programming with SPM

- System Requirements 2–2
- Installing the SPM Software 2–3
- Connecting the PC 2–9
- Accessing SPM 2–12
- Using SPM 2–16
- System Programming 2–42
- Upgrading the System 2–48
- Surrogate Mode Programming 2–58

Contents

3 Common Administrative Procedures

- Introduction 3–1
- Basic System Operating Conditions 3–4
- System Renumbering 3–12
- System Operator Positions 3–20
- Optional Operator Features 3–26
- QCC Optional Features 3–30
- Telephones 3–57
- Fax Machines 3–78
- Optional Telephone Features 3–83
- Optional Group Features 3–110
- Optional Group Calling Features 3–125
- System Features 3–147
- Night Service 3–190
- Labeling 3–201
- Print Reports 3–214
- Memory Card 3–222

4 Programming Procedures

- Introduction 4–1
- Basic System Operating Conditions 4–1
- System Renumbering 4–12
- System Operator Positions 4–22
- Lines and Trunks 4–24
- DS1 Facilities 4–68
- Tie Trunks 4–96
- DID Trunks 4–113
- PRI Facilities 4–130
- BRI Facilities 4–185
- Telephones 4–191
- Auxiliary Equipment 4–200

Contents

Programming Procedures, *continued*

- Optional Telephone Features 4–210
- Optional Operator Features 4–220
- QCC Optional Features 4–222
- Optional Group Features 4–231
- Optional Group Calling Features 4–237
- System Features 4–244
- Remote Access Features 4–261
- Automatic Route Selection 4–282
- Night Service 4–309
- Labeling 4–313
- Print Reports 4–317
- Data Features 4–321
- Integrated Administration 4–326
- Memory Card 4–329

5 Centralized Telephone Programming

- Introduction 5–1
- Access to Centralized Telephone Programming 5–2
- Program Extension 5–3
- Copy Extension 5–8
- Feature Quick Reference 5–12

Contents

A Customer Support Information

- Support Telephone Number A–1
- Federal Communications Commission (FCC) Electromagnetic Interference Information A–1
- Canadian Department of Communications (DOC) Interference Information A–2
- FCC Notification and Repair Information A–2
- Installation and Operational Procedures A–4
- DOC Notification and Repair Information A–5
- Renseignements sur la notification du ministére des Communications du Canada et la réparation A–6
- Security of Your System: Preventing Toll Fraud A–9
- Toll Fraud Prevention A–10
- Other Security Hints A–16
- Limited Warranty and Limitation of Liability A–20
- Remote Administration and Maintenance A–21

B Menu Heirarchy

C LED Displays

- LED Status C–1

D General Feature Use and Telephone Programming

- General Feature Use Information D–1
- Feature Table D–3
- Telephone Programming D–8

Contents

E **Button Diagrams**

F **Sample Reports**

G **General System Programming Sequence**

- System Programming Sequence G–1

H **Programming Special Characters**

- Single-Line Telephones H–1
- Analog Multiline Telephones H–2
- MLX Non-Display Telephones H–3
- MLX Display Telephones H–4

GL **Glossary** GL-1

IN **Index** IN-1

The exclamation point in an equilateral triangle is intended to alert the user to the presence of important operating and maintenance (servicing) instructions in the literature accompanying the product.

IMPORTANT SAFETY INSTRUCTIONS

When installing telephone equipment, always follow basic safety precautions to reduce the risk of fire, electrical shock, and injury to persons, including:

- Read and understand all instructions.
- Follow all warnings and instructions marked on or packed with the product.
- Never install telephone wiring during a lightning storm.
- Never install a telephone jack in a wet location unless the jack is specifically designed for wet locations.
- Never touch uninsulated telephone wires or terminals unless the telephone wiring has been disconnected at the network interface.
- Use caution when installing or modifying telephone lines.
- Use only AT&T-manufactured MERLIN LEGEND Communications System circuit modules, carrier assemblies, and power units in the MERLIN LEGEND Communications System control unit.
- Use only AT&T-recommended/approved MERLIN LEGEND Communications System accessories.
- If equipment connected to the analog extension modules (008, 408, 408 GS/LS) or to the MLX telephone modules (008 MLX, 408 GS/LS-MLX) is to be used for in-range out-of-building (IROB) applications, IROB protectors are required.
- Do not install this product near water, for example, in a wet basement location.
- Do not overload wall outlets, as this can result in the risk of fire or electrical shock.
- The MERLIN LEGEND Communications System is equipped with a 3-wire grounding-type plug with a third (grounding) pin. This plug will fit only into a grounding-type power outlet. This is a safety feature. If you are unable to insert the plug into the outlet, contact an electrician to replace the obsolete outlet. Do not defeat the safety purpose of the grounding plug.

- The MERLIN LEGEND Communications System requires a supplementary ground.
- Do not attach the power supply cord to building surfaces. Do not allow anything to rest on the power cord. Do not locate this product where the cord will be abused by persons walking on it.
- Slots and openings in the module housings are provided for ventilation. To protect this equipment from overheating, do not block these openings.
- Never push objects of any kind into this product through module openings or expansion slots, as they may touch dangerous voltage points or short out parts, which could result in a risk of fire or electrical shock. Never spill liquid of any kind on this product.
- Unplug the product from the wall outlet before cleaning. Use a damp cloth for cleaning. Do not use cleaners or aerosol cleaners.
- Auxiliary equipment includes answering machines, alerts, modems, and fax machines. To connect one of these devices, you must first have a Multi-Function Module (MFM).
- Do not operate telephones if chemical gas leakage is suspected in the area. Use telephones located in some other safe area to report the trouble.

WARNING:

- *For your personal safety, DO NOT install an MFM yourself.*
- *ONLY an authorized technician or dealer representative shall install, set options, or repair an MFM.*
- *To eliminate the risk of personal injury due to electrical shock, DO NOT attempt to install or remove an MFM from your MLX telephone. Opening or removing the module cover of your telephone may expose you to dangerous voltages.*

SAVE THESE INSTRUCTIONS

About This Book

The power and versatility of the MERLIN LEGEND® Communication System is due in part to its many options and features. These options and features have been recorded on system planning forms and initially programmed at the time of installation. Changes in use patterns, additional equipment, or a change in operating mode may necessitate additional system programming.

Intended Audience

This book is intended for system managers–people who plan, program, maintain, and manage the communication system. It is also intended for qualified support personnel who are responsible for installation and initial system programming.

How to Use This Book

This book contains all the programming procedures you need to enable your system to function at peak efficiency. Refer to the following documents for additional information:

- *Equipment and Operations Reference* provides detailed information on system hardware, telephones, and other equipment.
- *Feature Reference* describes features in detail and any possible feature interaction.
- *System Planning* describes the System Planning Forms and how to use them.

"Related Documents," later in this section, provides a complete list of system documentation together with ordering information.

In the U.S.A. only, AT&T provides a toll-free customer Helpline (1 800 628-2888) 24 hours a day. Call the Helpline, or your AT&T representative, if you need assistance when installing, programming, or using your system.

Terms and Conventions Used

The terms described here are used in preference to other, equally acceptable terms for describing communications systems.

Lines, Trunks, and Facilities

Facility is a general term that designates a communications path between a telephone system and the telephone company central office. Technically a trunk connects a switch to a switch, for example the MERLIN LEGEND Communications System to the central office. Technically, a line is a loop-start facility or a communications path that does not connect two switches, for example, an intercom line or a Centrex line. However, in actual usage, the terms line and trunk are often applied interchangeably. In this book, we use line/trunk and lines/trunks to refer to facilities in general. Specifically, we refer to digital facilities. We also use terms such as personal line, ground-start trunk, DID trunk, and so on. When you talk to your local telephone company central office, ask them what terms they use for the specific facilities they connect to your system.

Some older terms have been replaced with newer terms. The following list shows the old term on the left and the new term on the right.

trunk module	line/trunk module
trunk jack	line/trunk jack
station	extension
station jack	extension jack
analog data station	modem data station
digital data station	Terminal Adapter data station
7500B data station	Terminal Adapter data station
analog voice and analog data station	analog voice and modem data
digital voice and analog data station	MLX voice and modem data
analog data-only station	modem data-only station
digital data-only station	Terminal Adapter data-only station
digital data-only station	Terminal Adapter data-only station
digital voice and digital data station	MLX voice and Terminal Adapter data station
digital voice and 7500B data station	MLX voice and Terminal Adapter data station

Typographical Conventions

Certain type fonts and styles act as visual cues to help you rapidly understand the information presented:

Example	Purpose
It is *very* important that you follow these steps. You *must* attach the wristband before touching the connection.	Italics indicate emphasis.
The part of the headset that fits over one or both ears is called a *headpiece.*	Italics also set off special terms.
If you press the **Feature** button on an MLX display telephone, the display lists telephone features you can select. A programmed Auto Dial button gives you instant access to an inside or outside number.	The names of fixed-feature, factory-imprinted buttons appear in bold. The names of programmed buttons are printed as regular text.
Choose `Ext Prog` from the display screen.	Plain constant-width type indicates text that appears on the telephone display or PC screen.
To activate Call Waiting, dial **11.*	Constant-width type in italics indicates characters you dial at the telephone or type at the PC.

Product Safety Labels

Throughout these documents, hazardous situations are indicated by an exclamation point inside a triangle and the word *caution* or *warning*.

WARNING:
Warning indicates the presence of a hazard that could cause death or severe personal injury if the hazard is not avoided.

CAUTION:
Caution indicates the presence of a hazard that could cause minor personal injury or property damage if the hazard is not avoided.

Security

Certain features of the system can be protected by passwords to prevent unauthorized users from abusing the system. You should assign passwords wherever you can and limit knowledge of such passwords to three or fewer people.

Nondisplaying authorization codes and telephone numbers provide another layer of security. For more information, see Appendix A, “Customer Support Information” following *Maintenance and Troubleshooting*.

Throughout this document, toll fraud security hazards are indicated by an exclamation point inside a triangle and the words Security Alert.

Security Alert:
Security Alert indicates the presence of toll fraud security hazard. Toll fraud is the unauthorized use of your telecommunications system by an unauthorized party (for example, persons other than your company’s employees, agents, subcontractors, or persons working on your company’s behalf). Be sure to read “Your Responsibility for Your System’s Security” on the inside front cover of this book and “Security of Your System: Preventing Toll Fraud” in Appendix A, “Customer Support Information.”

Related Documents

In addition to this book, the documents listed below are part of the documentation set. Within the continental United States, these documents can be ordered from the AT&T GBCS Publications Fulfillment Center by calling 1 800 457-1235.

Document No.	Title
	System Documents
555-640-110	*Feature Reference*
555-640-112	*System Planning*
555-640-113	*System Planning Forms*
555-640-116	*Pocket Reference*
555-640-118	*System Manager's Guide*
	Telephone User Support
555-640-122	*MLX-10D™, MLX-10DP™, MLX-16DP™, MLX-28D™, and MLX-20L™ Display Telephones User's Guide*
555-630-150	*MLX-10D Display Telephone Tray Cards (5 cards)*
555-630-153	*MLX-28D and MLX-20L Telephone Tray Cards (5 cards)*
555-640-124	*MLX-10™ Nondisplay Telephone User's Guide*
555-630-151	*MLX-10 Nondisplay Telephone Tray Cards (6 cards)*
555-640-120	*Analog Multiline Telephones User's Guide*
555-640-126	*Single-Line Telephones User's Guide*
555-640-138	*MDC 9000 and MDW 9000 Telephones User's Guide*
	System Operator Support
555-640-134	*MLX Direct-Line Consoles Operator's Guide*
555-640-132	*Analog Direct-Line Consoles Operator's Guide*
555-640-136	*MLX Queued Call Console Operator's Guide*
	Miscellaneous User Support
555-640-130	*Calling Group Supervisor's Guide*
555-640-105	*Data and Video Reference*
	Documentation for Qualified Technicians
555-640-140	*Installation, Programming & Maintenance (IP&M) Binder [consists of Installation, System Programming & Maintenance (SPM), Maintenance & Troubleshooting*
	Toll Fraud Security
555-025-600	*GBCS Products Security Handbook*

How to Comment on This Document

We welcome your comments, both good and bad. Please use the feedback form on the next page to let us know how we can continue to serve you. If the feedback form is missing, write directly to:

Documentation Manager
AT&T
211 Mount Airy Road
Room 2W226
Basking Ridge, NJ 07920

Programming Basics

1

This chapter covers the information you need to know before you begin the programming procedures covered in Chapter 3, “Common Administrative Procedures” or Chapter 4 “Programming Procedures,” and includes the following:

- An introduction to system programming basics
- How to use the system programming console
- How the programming screens and keys work
- How to interpret and use the programming procedures
- How to enter and exit system programming
- What system components require idle states for programming
- New programming features introduced in Release 2.0 and higher

Introduction to System Programming

The communications system offers easy-to-use, menu-driven software for system programming. After your system is installed, you use this software to accommodate your company’s changing needs for such enhancements and modifications as upgraded lines, additional modules, and new telephone programming.

Planning Forms

Before you begin to program or modify your communications system, you should familiarize yourself with the system planning forms. Initially, system planning forms are used to plan your communications system and program your system during installation. After installation, they remain a source for all programming information on your communications system database. The information ranges from the system time and date to specific equipment configurations and feature programming.

Each planning form is either required or optional:

- Required forms are necessary to program the system.
- Optional forms are needed only if the system manager included the features or options on the forms.

Before you begin to program or modify your system, review the Control Unit Diagram on system planning Form 1 to identify the module types installed in the system's control unit. Use this information to program or modify lines and trunks and assign or reassign lines to telephones. Check the physical control unit to verify that the modules are placed in the slots identified on the diagram. Correct the diagram on Form 1 if there are any discrepancies.

Before you make any changes to your system, be sure to do the following:

- Mark any system modifications or changes on the appropriate planning form before the change is made. Keep your planning forms up to date.
- Check the *Feature Reference* for possible feature interactions.
- Program the system or the system component during the appropriate idle state. See "Idle States."

Types of Programming

Listed below are the three types of programming available for the communications system.

- **System Programming.** This type of programming enables the system manager to program features that affect all or most system users, and requires one of the following:
  - An MLX-20L™ telephone connected to one of the first five jacks of the first MLX module in the control unit.
  - A PC with System Programming and Maintenance (SPM) software. SPM emulates a system programming console on your PC. The PC should be connected to the lower port (labeled ADMIN) on the processor module. A PC with a modem can perform system programming remotely through the public network or by connecting to a tip/ring extension jack (012, 016 or 008 OPT module) on the communications system. A built-in modem in the processor allows the PC and the communications system to communicate.
- **Extension Programming.** This type of programming enables individual telephone users and system operators (except for QCC operators) to change their telephone features to meet individual needs. For details about extension programming, see the appropriate user and operator guides.
- **Centralized Telephone Programming.** This type of programming enables the system manager to program any feature that can be programmed by individual telephone users or system operators. Some features can be programmed only in centralized telephone programming. Centralized telephone programming can be done on the programming console or on a PC with the SPM software. See Chapter 5, “Centralized Telephone Programming.”

NOTE:
If your system has the AT&T Integrated Solution II or AT&T Integrated Solution III (IS II/III) UNIX® application, see Chapter 2, “Programming with SPM” for a list of the appropriate documentation.

System Programming Console

The system programming console is an MLX-20L telephone connected to the system programming jack. When you begin system programming on a new system for the first time, the console must be connected to the first jack on the first 008 MLX module or 408 GS/LS-MLX module (Release 2.0 and later versions). This jack is factory set as the system programming jack and as an operator position. When you program for the first time, you can change the system programming jack to any one of the first five jacks on the first 008 MLX module or 408 GS/LS-MLX module (Release 2.0 and later versions). This allows you to program without interfering with the operator's call handling.

You can also have one or two Direct Station Selectors (DSSs) connected to the system programming console. Each DSS adds 50 extension buttons to the console, which facilitates assigning features to telephones.

An MLX-20L telephone with a DSS is shown in Figure 1–1.

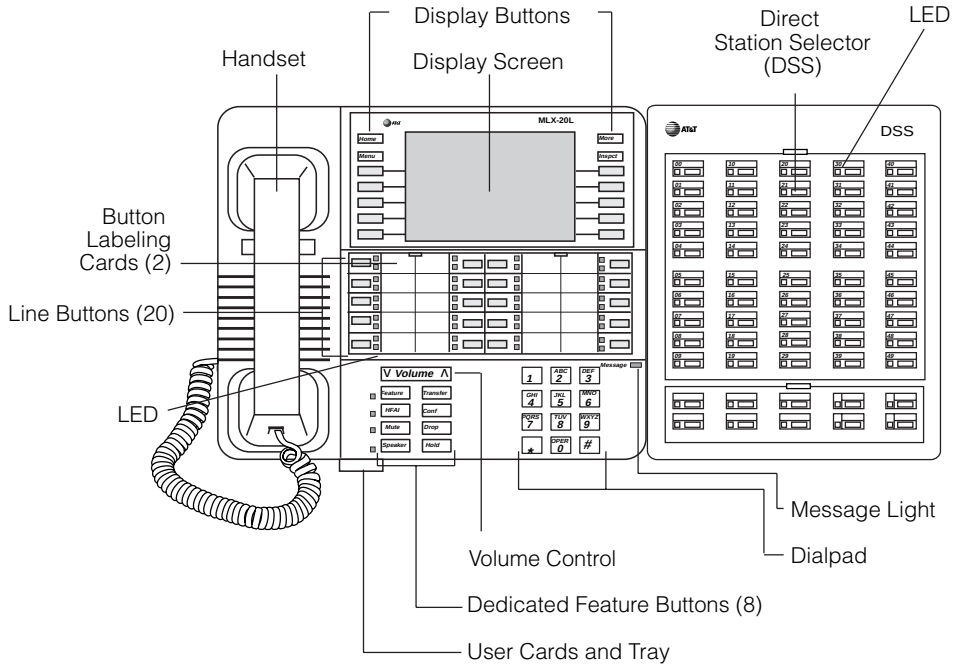

Figure 1–1. MLX-20L Telephone with Direct Station Selector (DSS)

Console Components

Refer to Figure 1–1 for the location of the components described below.

MLX-20L Console Components

Desk Stand (not shown)	An adjustable stand on the console and the DSS, allows a 20- or 30- degree viewing angle.
Button Labeling Cards	Cards labeled with the number or feature assigned to each line button.
Contrast Control (not shown)	A sliding control at the top of the console, used to brighten or dim the display screen.
Fixed Feature Buttons	Eight fixed display buttons for most-used features. **Feature** for viewing the Feature screen and selecting features. **HFAI** (Hands Free Answer on Intercom) for answering voice-announced calls without the handset. **Mute** for turning the speakerphone's microphone on and off. **Speaker** for talking on a call through the speakerphone without lifting the handset. **Transfer** for sending a call to another telephone. **Conf** for adding a line or extension to a conference call. **Drop** for disconnecting an extension or line from a conference call. **Hold** for putting a call on hold.
Dialpad	Number pad for dialing telephone numbers.
Direct Station Selector	A device that adds extension buttons and other buttons to the console.
Display Buttons	Four fixed display buttons and ten unlabeled buttons used to view the different screens and select names, features, and options from the display screen. See "Console Buttons."
Display Screen	Screen with a 7–line by 24–character display area that shows call information, features, prompts, date, and time.
Handset	The hand-held part of the console you pick up, talk into, and listen from.
LEDs	(Light-Emitting Diodes) The lights on the console that assist in checking feature status.
Line Buttons	20 buttons to make and receive calls; unlabeled buttons are programmable for one-step feature use.
Message Light	A red light that signals a waiting message.
User Cards and Tray	A slide-out drawer with erasable cards for noting telephone numbers and feature codes.
Volume Control	A button for adjusting the volume of the speaker, handset, headset, and ringer.

DSS Components

Covers	Removable plastic covers to protect the designation cards. The top cover protects the 50 DSS button labels. The lower cover fits over the fixed buttons.
DSS Designation Cards	Cards for labeling the extension or feature assigned to each button.
DSS Buttons	50 buttons used for one-touch dialing of co-workers' extensions to make or transfer calls. DSS buttons are also used to page co-workers over speakerphones, to park calls, and to handle outside calls.
Fixed Buttons	Ten additional buttons, including **Message Status**, **Direct Voice Mail** and three **Page** buttons. The five remaining buttons on the first DSS are not used. If a second DSS is connected to the console, the 10 buttons at the bottom of the second DSS are not used.
	Fixed **Message Status** button used with fixed **Page** buttons to see which telephones have Message Lights on.
	Fixed **Page** Buttons are three buttons used to select the pages of extensions that the 50 DSS buttons represent.
LEDs	(Light-Emitting Diodes) The lights that assist in checking feature status.

Console Buttons

Use the 14 buttons located on either side of the console display area for system programming. These buttons are arranged in two columns of seven buttons, as shown in Figure 1–2.

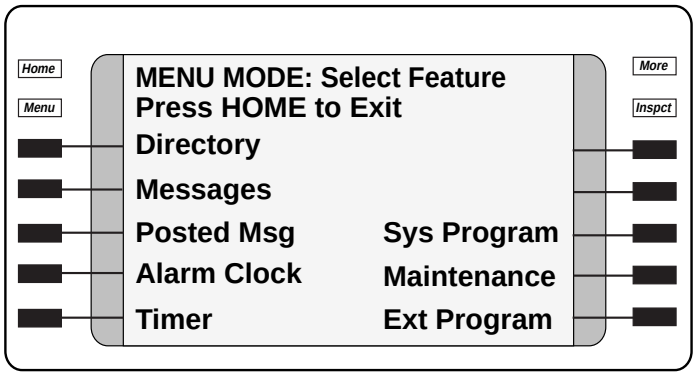

Figure 1–2. Display Buttons and Main Menu

Fixed Display Buttons

The top two buttons in each column have the same labels and functions regardless of the screen display. This type of button is called a *fixed display button*. Table 1–1 describes the functions of the fixed display buttons.

Table 1–1. Fixed Display Buttons

Button	Function
Home	Return to normal call-handling mode after you finish programming.
Menu	Display the main menu shown in Figure 1–2.
More	Display more items when a menu is continued on more than one screen, indicated by an angle bracket (>) on the upper right of the screen.
Inspct	(Inspect) View a list of lines or extensions on which a feature is programmed or the settings for a feature.

Unlabeled Display Buttons

Use the five unlabeled display buttons on each side of the screen to select commands, options, or items on the screen. The functions of these buttons vary based on the option you select.

If you are using SPM for system programming, the simulated MLX-20L console screen on your PC screen shows the function keys that correspond to the console screen selections. This book shows function keys in a box: [ ]. For example, to save an entry, you select Enter on the console or press [F10] on your PC. See Chapter 2, “Programming with SPM,” for details about using function keys and additional information about SPM.

Console Overlay

The programmable line buttons are on the main part of the console. There are actually 20 line buttons on the console, but you can use the console overlay to program up to 34 line buttons on any extension through centralized telephone programming. Select Page 1 to access line buttons 1 through 20 and Page 2 to access line buttons 21 to 34. The top line of numbers next to each line button on the console overlay represents line buttons. See Figure 1–3 below.

Appendix E shows the button diagrams for the telephones used in the communications system. Refer to this appendix when programming buttons for other telephones.

When entering labels or filenames, the letters A through F are displayed on the MLX-20L console screen. Additional letters can be entered by using line buttons 1 to 20 to represent letters G through Z. These letters are also displayed on the top line of the console overlay.

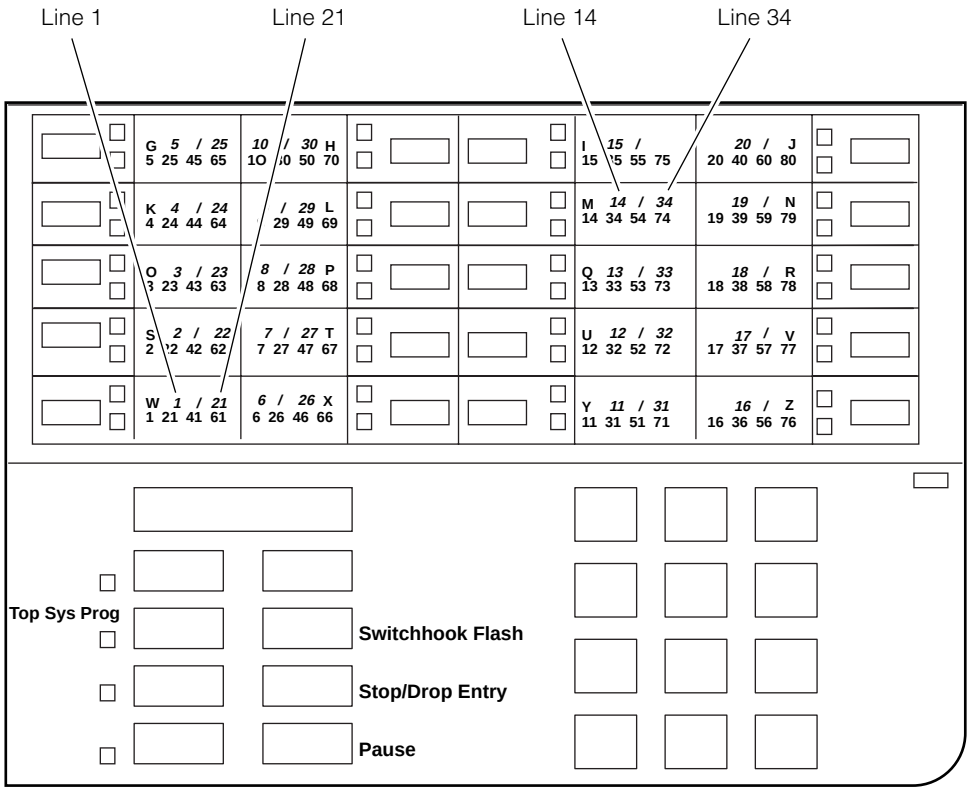

Figure 1–3. Console Overlay

When programming lines/trunks you can select a block of 20 lines/trunks as shown on the screen below, and toggle the green or red LED associated with each line button on the console to program each line/trunk. The bottom line of numbers next to each line button on the console overlay represents the twenty lines/trunks associated with each line button. See Figure 1–3 above.

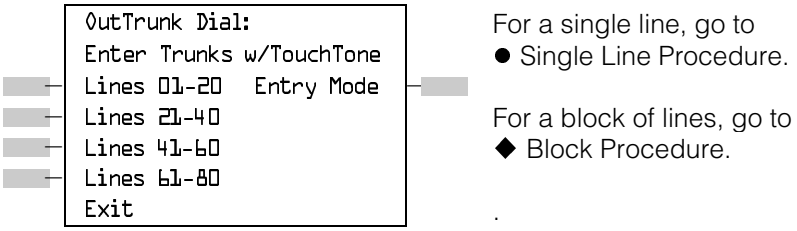

Figure 1–4. Selecting a Block of Lines/Trunks

Console and DSS Lights

The red and green lights (LEDs) next to each of the 20 line buttons show the status of the line/trunk options. LEDs on the DSS show the status of features programmed on extensions. See Appendix C, “LED Displays,” for more information.

Console Lights

The green and red LEDs next to each button on the console will display the status of the line/trunk option that is being programmed. For example when you select Pools from the Lines Trunks menu, the red LED will be off if the selected line is not in a pool and on if the line is in a pool. Appendix C “LED Displays,” provides a table that shows the default LED status for line/trunk options.

DSS Lights

The lights on the DSS (if one is attached to the console) show the status of features being programmed on the extensions. When you select a feature from a menu, the red LED next to the DSS button is on, off, or flashing, depending on whether the feature is programmed on the corresponding extension. For example, when you select `Toll Restrict` from the Restrictions menu, the red LED next to the DSS button lights for each toll-restricted extension. Appendix C “LED Displays,” provides a table that shows the default DSS status of LEDs for system features.

Programming Procedures

The programming procedures provide step-by-step instructions for programming the communications system. This section details how to make the best use of the programming procedures.

Procedure Organization

The programming procedures in Chapter 3, “Common Administrative Procedures” and Chapter 4, “Programming Procedures,” are organized into logical groups. The programming procedures associated with a specific aspect of the system are grouped together under one heading. For example, to assign network services for PRI, you would go to the section titled “PRI” and then locate the network services procedure. For quick reference, see “System Programming Hierarchy” for a list of procedures, based on the menu hierarchy in Appendix B, that traces the menu path for a specific function.

Procedure Content

Each procedure begins with a general description of the feature, followed by a summary of programming information that includes the items listed below.

Programmable by	Indicates who has permission to use the procedure.
Mode	Specifies which system mode supports the procedure: Key, Hybrid/PBX, Behind Switch, or a combination.
Idle condition	Specifies the idle state required before the procedure can be performed.
Planning form	Indicates the planning forms that provide information for the procedure.
Factory setting	Shows the default settings, if any, for equipment or features affected by the procedure.
Valid entries	Specifies the characters, numbers, or values accepted during data entry.
Inspect	Specifies whether or not the feature status can be verified using the Inspect feature.
Copy option	Indicates whether or not the feature programmed with the procedure can be copied to another system component.
Console Procedure	Provides a summary of the procedure steps using the system console.
PC Procedure	Provides a summary of the procedure steps using SPM.

This list is followed by the step-by-step programming procedure for the feature. See “Using the Programming Procedures”ı for complete information about how to use the programming procedures.

Programming Screens

There are three types of system programming screens:

- Information screens, to view what is currently programmed on the system.
- Menu selection screens, to select options from a menu.
- Data entry screens, to enter values or to identify a specific extension or line/trunk you want to program.

Figure 1–5 shows a sample information screen. When you select `Sys Program` from the main menu screen (shown in Figure 1–2), the screen shown in Figure 1–5 appears with system setup information.

```
System Set-up
Review and Exit
Size: xxxx
Type: xxxx
Operator: xxxx xxxx xxxx
xxxx xxxx xxxx
Exit
```

Your system information appears in place of the *x*'s.

Figure 1–5. Information Screen

You cannot make changes on an information screen. Select `Exit` (F5 on the PC) to continue to the next screen in the procedure.

Figure 1–6 shows a sample menu selection screen.

```
System Programming:  >
Make a Selection
System        Extensions
SysRenumber   Options
Operator      Tables
LinesTrunks   AuxEquip
Exit          NightSrvce
```

Screen title and **More** indicator (>)
Prompt
Options

Figure 1–6. Menu Selection Screen

A menu selection screen prompts you to select one of the available options. The screen title is the first line on all screens. The second line contains a system prompt or instruction. The remaining lines of text vary based on the selected option.

An angle bracket (>) appears in the upper right corner of menu selection screens that have additional option screens. Press **More** (or PgUp on the PC) to see the additional screens. Continue to press **More** to move through the screens and return to the original screen.

Figure 1–7 shows a sample data entry screen.

```
Assign Lines/Trunks:
Enter extension



Backspace
Exit          Enter
```

Option Selected
Prompt
Data Entry Area

Figure 1–7. Data Entry Screen

A data entry screen prompts you to enter specific data or to make specific choices. Data to be entered will be displayed with *n*s in the text. When *n*s appear on the data entry screen they indicate data currently programmed for the feature. An exception is the slot/port number which is displayed as *sspp* to distinguish the 2-digit slot number from the 2-digit port number.

Many screens show data entered on a previous screen, such as an extension or trunk number. Within the programming procedures, this type of variable information is shown with *x*'s.

When information to be entered varies in the number of digits required (for example, a telephone number that can range from 7- to 20-digits), the data may be displayed as an uppercase *X* or *N*.

Data entry screens may also contain menu selections. Instead of entering data from the dialpad, you select options on the screen, such as Yes or No, to enable or disable a feature. To select this type of option, you press the unlabeled display button next to the option name, or the function key that corresponds to the option name. Then your selection is highlighted. To program or save the highlighted selection, you press the unlabeled display button next to Enter (F10 on the PC).

Verifying Data Entry

You can use the Inspect feature to view the entries you save. An example of how to use the Inspect feature begins with Figure 1–8. The figure shows a data entry screen with the first (of two) required extension numbers needed to assign analog voice and data.

```
Data Voice/Data     >
Enter voice/data pair

7108
              Delete
Backspace
Exit          Enter
```

Selected Option Prompt

Extension entered

Figure 1–8. Inspect Example

After you enter and save 7108, the system automatically assigns the next sequential extension jack number. This extension jack pair does not appear on the data entry screen; however, if you press **Inspct** (PgDn on the PC), the pair appears, as shown on the sample Inspect screen in Figure 1–9.

```
Voice/Data Pairs:    >
7108  7109




Exit
```

Inspect data displayed

Figure 1–9. Sample Inspect Screen

Whenever you want to return to the previous screen, select Exit (F5 on the PC).

The Inspect feature also allows you to check a value currently programmed for a feature. This is helpful when you are changing or modifying features. You can also use it when you program sequential extensions or lines to verify the last number programmed. See the *Feature Reference* for details about the Inspect feature.

Using the Programming Procedures

This section contains specific information about how to make the best use of the programming procedures. Make certain that you read and understand the information presented here before you begin any system programming procedures.

Format

The programming procedures are presented as numbered steps in the format shown below.

	Console/Display Instructions	Additional Information	PC
1	**The step instruction is shown here.**		
	Console Display Press here	On the PC, press the function key that appears in the **PC** column.	➔
2	**Enter the B-channel group number (*nn* = 1 to 69).**		
	Enter B-Channel Groups: *x* Enter the group number:	*x* = B-channel entered in Step 1 Dial or type [*nn*].	

The Gray Bar

The gray bar contains the step number and instructions. The gray bar may also contain symbols that direct you to a branch procedure. (see “Branching”).

Sometimes, the gray bar contains data entry information, which follows the step instruction and is shown in parentheses. You use the (*nn* =) value in the gray bar to replace the variable [nn] in the instruction. For example, in sample Step 2 the parenthetical statement (*nn* = 1 to 69) indicates that 1 through 69 are acceptable entries for the group number that you dial or type.

An empty gray bar signals the end of a main procedure.

Console/Display Instructions Header

In most cases, the screen shown in the console display area contains the results of the *previous* step. A step with no screen indicates that you should look at the preceding step. The console key that corresponds to the option you are to select is highlighted in black as shown in sample Step 1 above. The function key that corresponds to the highlighted console option is shown in the right column under the PC header.

When more than one but fewer than six options may be selected from the screen, each console key for each option is highlighted in gray as shown in sample Step 3 below. To prevent clutter, when six or more options may be selected, no highlighting is shown. See “Additional Information and PC Headers” for more information about how more than five options are presented.

Additional Information and PC Headers

The information displayed under the Additional Information header may contain notes, a value entered in a previous step, branching instructions, general information, or specific instructions.

Sample Step 2 shows a typical display of a value entered in a previous step. The *x* corresponds to the *x* shown on the console screen. Variable screen information is always shown as *x*s or *n*s in italics.ı Variable input information is always shown in brackets ([]), as *x*s or *n*s in italics.

In data entry steps, the area under the Additional Information header contains instructions that apply to both the console and the PC. In such cases, the PC column contains the symbol ➲. When you see this symbol, follow the instructions under the Additional Information header, for example:

Dial or type [*nn*].

On the console you dial the entry, and on the PC you type the entry.

You also see the ➲ symbol when six or more options can be selected from a screen. Rather than highlighting all of the options and showing all of the PC keys, the Additional Information header contains instructions for both, for example:

Press the button or function key next to your selection.

On the console you press the key next to your selection, and on the PC you press the function key next to your selection.

Branching

Many of the procedures contain features for which there are multiple programming options, while other procedures show more than one way to program a particular feature. To accommodate both of these programming methods, the procedures use *branching*. Branching separates the options from the main procedure and places them in subprocedures (branch procedures).

The screen shown in sample Step 3 displays three menu selections for the Network Services feature. The procedure is broken into three branches (or branch procedures) to accommodate the three menu options.

	Console Display/Instructions	Additional Information	PC
3	**Specify a network service.**	● ◆ ■	
	Network Services: Make a selection AT&T Toll Local Misc Exit	If you select **AT&T Toll**, go to ● AT&T Toll Procedure. If you select **Local**, go to ◆ Local Procedure. If you select **Misc**, go to ■ Miscellaneous Procedure.	 F1 F2 F3
4	**If necessary, continue with this step when you complete the branch procedure.**		

In the gray bar, the symbols (● ◆ ■ ▲ ✚ ✪ ✶) alert you to a step that contains branching. The number of symbols in the gray bar indicate the number of available options/branches at the step and make it easy to locate the branch procedure that you want. All branch procedures *follow* the main procedure from which they are branched.

The first branch procedure from sample Step 3 is shown below.

● AT&T Toll Procedure

1	**Specify a service.**		
	B-Channel Group *xx*: Select one MegacomWATS MULTIQUEST ACCUNET SDS LongDistnce SoftDefNetw Megacom 800 Exit Enter	*xx* = number entered in Step 5 Press the button or function key next to your selection.	 ↵
2	**Save your entry.**		
	Select **Enter**.		F10
3	**Repeat Steps 1 and 2 of the main procedure for each toll group number.**		

	Console Display/Instructions	Additional Information	PC
4	**For additional toll services, go to Step 1; then continue with Step 5.**		
5	**Return to Step 4 of the main procedure.**		

Each branch procedure is self-contained and begins with Step 1. Be sure to complete all of the steps in a branch procedure before you return to the main procedure.

The examples in the following text refer to Steps 1 through 5 of the ● AT&T Toll Procedure (above), which is a branch of the Network Services procedure.

When you are to repeat a step *within the branch procedure*, you are instructed to *go to* that step. For example, at Step 4 of the branch procedure you would go back to Step 1 of the branch procedure and repeat branch Steps 1 through 4 for additional toll services. If you did not need to enter any other toll services, you would continue with Step 5 of the branch procedure.

When a branch step instructs you to *return to* the main procedure, the branch procedure is complete. At Step 5 of the branch procedure you would return to Step 4 of the Network Services procedure to continue. In some cases, you can select `Exit` (F5 on the PC) to return to the menu where the branch began; these are noted in specific programming procedures. In cases where completing the branch procedure also completes the main procedure you will be instructed to select `Exit` (F5 on the PC) one or more times to return to the system programming menu.

Single or Block Items

Branching is also used when you can select between programming a single item or a block of items, such as a single line or a block of lines, as shown in sample Step 5.

	Console/Display Instructions	Additional Information	PC
5	**Specify the line(s).**	● ◆	

	`B-Channel Group xx:`
	`Assign lines`
	`Lines 01-20  Entry Mode`
	`Lines 21-40`
	`Lines 41-60`
	`Lines 61-80`
	`Exit`
		xx = number entered in Step 2
		
		To select a single line, go to ● Single Line Procedure.
		
		To select a block of lines, go to ◆ Block of Lines Procedure.	

6	**Continue with this step when you complete the branch procedure.**		

● Single Line Procedure

	Console Display/Instructions	Additional Information	PC
1	**Specify entry mode.**		
	Select `Entry Mode`.		F6
2	**And so on ...**		
3	**Return to Step 6 of the main procedure.**		

◆ Block of Lines Procedure

1	**Specify the block of 20 lines associated with 20 buttons on the system programming console.**		
	Select `Lines 01-20`		F1
	`Lines 21-40`		F2
	`Lines 41-60`		F3
	`Lines 61-80`		F4
2	**And so on ...**		
3	**Return to Step 6 of the main procedure.**		

Saving Entries and Moving Among Screens

At the bottom of each screen, there are one or more screen keys with functions that allow you to change your entry, save your entry, or return to a previous screen. Various combinations of these screen keys appear on each programming screen. Figure 1–10 shows the QCC Priority screen with a typical display of screen keys.

```
QCC Priority x:
Enter line/trunk number

 xxx
                 Delete      F8
F4  Backspace    Next        F9
F5  Exit         Enter       F10
```

x = QCC Priority entered in earlier Step

xxx = line/trunk number (801-880)

Figure 1–10. Screen Keys

The PC keys that correspond to the screen key selections are shown here for quick reference. These PC keys do not appear on the console display screen.

Table 1–2 contains details on the use of the screen keys.

Table 1–2. Screen Keys

Display	Key	Function
BackSpace	F4 or ← Bksp	**Change your entry.** Select Backspace (F4 or ← Bksp on the PC) to correct your entry. Each time you press the key, the screen cursor moves backward to erase one character at a time.
Enter	F10 or Enter ↵	**Save your entry.** Typically, you select Enter (F10 or Enter ↵ on the PC) to complete a procedure and save the information. Occasionally, you must select Exit (F5 on the PC) and return to a previous screen after you use Enter. If the entry is not valid, the system may beep and/or display an error message and does not save the entry.
Delete	F8	**Delete a current entry.** Select Delete (F8 on the PC) to delete (or remove) a current entry.
Next	F9	**Program sequentially numbered items.** If you are programming a group of sequentially numbered extensions, lines, or trunks, you may have the option to select Next (F9 on the PC). This saves your entry and automatically provides the number of the next extension or trunk in the sequence. Typically, you remain at the same screen until you select Next. In a few cases, you may return to an earlier screen in the procedure.
Exit	F5	**Return to the previous screen.** Select Exit (F5 on the PC) when you complete a procedure, to move up one screen in the menu hierarchy. (Appendix B provides a reference to the entire System Programming menu hierarchy.)
		Exit a screen without changes. *In most cases*, you select Exit (F5 on the PC) to exit from a screen without making any changes. Exceptions are noted as part of a procedure.
		Complete a procedure. *In a few cases*, you return to the System Programming menu when you select Exit. *In most cases*, you return to an intermediate step within the procedure. You can then select one of the options shown on the screen and continue programming, or you can continue to use Exit until you return to the System Programming menu.

Using Enter

Pressing **Enter** to save your entry will have one of the following results:

- The next screen in the procedure appears. See Steps 4 and 5 in the sample procedure below.
- The screen does not change and you can enter another extension or line/trunk. In most of these cases, **Delete** is also an option. **Enter** is used to assign the extension to a group or to assign a feature to the extension. **Delete** is used to remove the extension from a group or to remove the feature from the extension. See Steps 5 and 6 in the sample procedure below for an example of this type of screen.
- The procedure is complete and you return to a previous screen.

	Console Display/Instructions	Additional Information	PC
3	**Specify the extension.**		
	BIS/HFAI Extensions: Enter extensions *xxxx* Delete Backspace Exit Enter	**SP:** "Entering an Extension"	
4	**Assign or remove BIS/HFAI capability.**		
	Select **Enter** or **Delete**.	You may continue to assign or remove BIS/HFAI capability to additions extensions by repeating Steps 3 and 4.	F10 F8
5	**Return to the System Programming menu.**		
	Select **Exit** two times.		F5 F5

Using Next

When you are programming a feature that can apply to a sequence of extensions, lines/trunks or groups, the screen key **Next** appears on the console display. **Next** (F9 on the PC) permits you to save your current entry and display the next number in the sequence. You can continue to press **Next** until you finish programming the entire sequence. When the last number in the sequence displays on the screen, press **Enter** (F10 or Enter↵ on the PC) to save the final entry and move to the next step of the procedure. Procedures that allow the use of **Next** will direct you to the correct screen to continue programming as shown in Step 6 in the example below below.

NOTE:
If you plan to take advantage of this key, remember to *enter the lowest number in the sequence* at the first prompt.

Console Display/Instructions	Additional Information	PC
5 Specify whether the operator receives the alert.		
QCC Operator *xxxx*: Select one InQue Alert Enable InQue Alert Disable Next Exit Enter	*xxxx* = operator entered in Step 1 Select **InQue Alert Enable** or **InQue Alert Disable**.	 F1 F2
6 Save your entry.		
Select **Enter** or **Next**	Use **Next** to program the next QCC position. Go to Step 5.The next QCC operator will be displayed on Line 1. After programming the last QCC operator position, select enter and go to Step 7.	F10 F9
7 Return to the System Programming menu.		
Select **Exit** two times.		F5 F5

System Programming Hierarchy

The following table shows all of the options that are available under each of the System Programming main menu options displayed on the system programming console. Following the option name is a brief description of the option and the page number where detailed instructions can be found.

Main menu options are shown in a separate box. First level options are bold, second level options are preceded by an asterisk (*). The remaining levels are shown with increasing amounts of indentation.

System	Description	Page
Restart	Restart the system (cold start)	4–2
SProg Port	Extension used for system programming	3–4
Mode	Sets the system mode. See *Equipment and Operations*	4–7
* Key		
* Hybrid/PBX		
* BehindSwitch		
Board Renum	Renumber boards that have already been installed	4–5
MaintenBusy	Enable Automatic Maintenance Busy	4–8
* Enable		
- Auto Busy Tie Trunks		
- Enable		
- Disable		
* Disable	Disable Automatic Maintenance Busy	
Date	System date	3–8
Time	System time	3–10
Back/Restore		
* Backup	Backup system programming to a memory card	3–225
* Restore	Restore system programming from a memory card	4–335
* Auto Backup	Automatic backup	3–228
- Off	Turn off automatic backups	
- Daily	Daily backups of system programming	
- Weekly	Weekly backups of system programming	

SysRenumber	Description	Page
Default Numbering	Default extension numbering plans	4–14
* 2-Digit		
* 3-Digit		
* SetUp Space		

SysRenumber	Description *Continued*	Page
Single	Single extension renumbering	3–14
* Lines	Lines/Trunks	
* Extensions	Extensions	
* Pools	Pools (Hybrid/PBX only)	
* Group Page	Paging Group	
* GrpCalling	Calling Group	
* Adjuncts	Adjuncts	
* Park	Park	
* ARS DialOut	Automatic Route Selection dial out (Hybrid/PBX only)	
* RemoteAccs	Remote Access	
* DSS Buttons	Page buttons on the DSS	
* ListDirctNo	Listed directory number	
Block	Block extension renumbering	3–17
* Lines		
* Extensions		
* Adjuncts		

Operator	Description	Page
Positions	System operator positions	3–20
* Direct Line*	Direct-Line Console (DLC)	3–23
* Queued Call*	Queued Call Console (QCC)	3–21
Queued Call	QCC optional features (Hybrid/PBX mode only)	3–30
* Hold Rtrn	Hold Return	3–30
- Return to Queue		
- Remain on Hold		
* HoldRelease	Automatic hold or release	3–32
- Auto Hold		
- Auto Release		
* Threshold	Queue over threshold	3–34
* ElvatePrior	Elevate priority	3–35
* InQue Alert*	Calls-In-Queue Alert	3–37
- InQue Alert Enable		
- InQue Alert Disable		

	Description *Continued*	Page
Operator		
* Call Types	QCC Operator to Receive Call Types	3–39
- Dial 0	Dial 0 Calls	
- Priority		
- Operator		
- Follow/Frwd	Forward/Follow Me Calls	
- Unassign DID	DID call to invalid destinations	
- Priority		
- Operator*		
- ListedNumber	Calls to the Listed Directory Number	
- Priority		
- Operator		
- QCC Ext	QCC Extension calls	
- Returning	Returning calls	
- Priority		
- Operator		
- GrpCoverage	Group Coverage calls	
- Priority		
- Operator*		
* Msg Center*	Message center operation	3–46
* ExtndComplt	Extended call completion	3–48
- Automatic Complete		
- Manual Complete		
* Return Ring	Return Ring	3–50
* QCC Backup	Position Busy Backup	3–52
* Voice Annc	Voice Announce for QCC	3–54
Hold Timer	System wide hold timer for QCCs and DLCs	3–26
DLC Hold	DLC Operator Automatic Hold	3–28
* Auto Hold Enable		
* Auto Hold Disable		

	Description	Page
LinesTrunks	Lines/Trunks options	
LS/GS/DS1	Loop-start, ground-start or DS1 options	
* (DS1)	DS1 options	
- Type	Type of DS1 facility	4–68
- T1		
- GroundStart	Ground-start emulation on selected channels	
- Loop Start	Loop-start emulation on selected channels	
- TIE	Tie Trunk emulation on selected channels	
- TIE-PBX	Tie-PBX transmit/receive loss parameter	
- Toll	Toll transmit/receive loss parameter	
- S56	Switched 56 Data	
- Unequipped	Unused channels	
- All Ground	Ground-start emulation on all channels	
- All Loop	Loopstart emulation on all channels	
- All TIE	Tie Trunk emulation on all channels	
- TIE-PBX	Tie-PBX transmit/receive loss parameter	
- Toll	Toll transmit/receive loss parameter	
- S56	Switched 56 Data	
- All Unequip	All channels unequipped	
- DID	DID emulation on selected channels	
- All DID	DID emulation on all channels	
- S56 Data	Switched 56 Data	
- Direction		
- Intype		
- Outtype		
- AnsSupv		
- Disconnect		
- Inmode		
- Outmode		
- All S56Data	All Switched 56 Data	
- Direction		
- Intype		
- Outtype		
- AnsSupv		
- Disconnect		
- Inmode		
- Outmode		
- PRI	Primary Rate Interface	
- Frame Format	Framing format for the 100D module	4–86
- D4 Compatible		
- Extended Super Frame		
-Suppression	Type of zero code suppression	4–88
- AMI ZCS		
- B8ZS		
- Signaling	Signaling mode	4–90
- Robbed Bit		
- Common Channel		

	Description	Page
LinesTrunks	***Continued***	
- Line Comp	Line compensation	
- ChannelUnit	Type of equipment provided by local telephone	4–92
- Foreign Exchange	company	4–94
- Special Access		
* (4xx GS/LS)	Line/Trunk type for 4xx GS/LS module	
- GroundStart		
- Loop Start		
- All Ground		
- All Loop		
* (8xx GS/LS)	Line/Trunk type for 8xx GS/LS module	
- GroundStart		
- LoopStart		
- All Ground		
- All Loop		
Tie Lines		
* Direction	Tie trunks direction	4–96
- Two Way		
- OutGoing		
- Incoming		
* Intype	Signaling type: incoming tie trunk.	4–98
- Wink		
- Delay		
- Immed		
- Auto		
* Outtype	Signaling type: outgoing tie trunk	4–98
- Wink		
- Delay		
- Immed		
- Auto		
* E&M Signal	Type of tie trunk signal	4–100
- Type 1S		
- Type 1C		
- Type 5		
* Inmode	Set incoming tie trunk to touch tone or rotary	4–102
* Outmode	Set outgoing tie trunk to touch tone or rotary	4–102
* Dialtone	Tie trunk dial tone	4–105
* AnsSupvr	Tie trunk answer supervision time	4–108
* Disconnect	Tie trunk disconnect time	4–110

LinesTrunks	Description *Continued*	Page
TT/LS Disc		
* OutMode	Outmode Signaling for loop- or ground-start trunks	4–27
* LS Disconnect	Disconnect signaling reliability	4–35
- Yes		
- No		
DID	DID Trunk Options	
* Block		4–113
* Type	DID trunk type	4–116
- Immed		
- Wink		
* Disconnect	DID trunk disconnect time	4–118
* ExpectDigit	Expected digits	4–120
* DeleteDigit	Delete Digits	4–122
* Add Digits	Add digits	4–124
* Signaling	Type of dialing signal	4–126
- Rotary		
- Touch Tone		
* InvalDstn	Directing outside calls on invalid extension	4–128
- Send To Backup Extension		
- Return Fast Busy		
PRI	Primary Rate Interface (PRI) trunk options	
* PhoneNumber	Telephone number to each PRI channel	4–130
* B-ChannelGRP	Assign B-channel groups.	4–133
- Lines	Assign lines to B-channel groups	
- Network Serv	Network service	4–138
- AT&T Toll	AT&T toll service	
- MegacomWATS		
- ACCUNET SDS		
- SoftDefNetw		
- Megacom 800		
- MULTIQUEST		
- LongDistnce		

	Description *Continued*	Page
LinesTrunks		
- Local	Local service	
- OUTWATS		
- 56/64 Digit		
- VirtPrivNet		
- INWATS		
- Misc	Miscellaneous network service	
- Other		
- CallByCall		
- Copy Number	Copy telephone number to send	4–141
- Copy PhnNum to NumToSend		
- Do Not Copy Phone Number		
- IncomingRtg	Incoming Routing	4–144
- Routing by Dial Plan		
- Route by Line Appearance		
* NumberToSend	Telephone number to send to the network	4–146
- Extension Only		
- Base Number with Ext.		
- Line Telephone Number		
* Test TelNum	Line/trunk test telephone number	4–149
* Protocol		
- Timers	Timers and counters	4–151
- T200 Timer		
- T203 Timer		
- N200Counter		
- N201Counter		
- K Counter		
- T303 Timer		
- T305 Timer		
- T308 Timer		
- T309 Timer		
- T310 Timer		
- T313 Timer		
- T316 Timer		
- TEI	Terminal equipment identifier	

	Description	Page
LinesTrunks	***Continued***	
*DialPlanRtg	Dial Plan Routing	4–158
- Service	Service	
- AT&T Toll	AT&T toll service	
- Megacom 800		
- ACCUNET SDS		
- SoftDefNetw		
- MULTI QUEST		
- MegacomWATS		
- LongDistnce		
- Local	Local service	
- INWATS		
- 56/64 Digit		
- VirtPrivNet		
- OUTWATS		
- Misc	Miscellaneous service	
- Other		
- Any Service		
- No Service		
- Patterns		
- TotalDigits		
- DeleteDigit		
- Add Digits		
* OutgoingTbl	Outgoing tables	
- NetwkSelect	Network selection	4–168
- SpecialServ	Special services	4–170
- Pattern		
- Operator		
- Local Operator		
- Presubscribed Carrier		
- No Operator		
- Typeof Number		
- National		
- International		
- DeleteDigit		

	Description	Page
LinesTrunks	***Continued***	
- CBC Service	Call by Call service	4–176
- Patterns		
- Voice Data		
- Voice Only		
- Data Only		
- Voice/Data		
- NetworkServ	Network service	
- AT&T Toll	AT&T toll service	
- Megacom WATS		
- ACCUNET SDS		
- SoftDefNetw		
- LongDistnce		
- Local	Local service	
- OUTWATS		
- 56/64 Digit		
- VirtPrivNet		
- Misc	Miscellaneous service	
- Other		
- No Service		
- Delete Digit	Number of digits to delete	
Copy	Copy options for lines/trunks	4–63
* Single		
* Block		
Remote Access	Remote Access options	
* LinesTrunks	Remote Access trunk assignment	4–261
- Dedicated		
- Shared		
- No Remote		
* Non-TIE	Non-Tie Lines: Remote Access options	
- BarrierCode	Barrier code requirements	
- Barrier Code Required		
- BarrierCode Not Required		
- Restriction	Non-Tie trunk restriction	
- Unrestricted		
- Outward Restrict		
- Toll Restrict		

	Description	Page
LinesTrunks	***Continued***	
- ARS Restrict	Non-Tie trunk ARS Facility Restriction Level	
- Allow List	Non-Tie trunk Allowed Lists assignment	
- DisallowLst	Non-Tie trunk Disallowed Lists assignment	
* TIE Lines	Tie lines: Remote Access options	
- BarrierCode	Barrier code requirements	4–267
- Barrier Code Required		
- BarrierCode Not Required		
- Restriction	Tie trunk restriction	
- Unrestricted		
- Outward Restrict		
- Toll Restrict		
- ARS Restrict	Tie and DID trunk ARS Facility Restriction Level	
- Allow List	Tie and DID trunk Allowed Lists assignment	
- Disallow List	Tie and DID trunk Disallowed Lists assignment	
* BarrierCode	Barrier code options	4–271
- SProg/Maint	Not currently available	
- Code Info	Barrier code information	
- Code Length	Barrier code length	
- Code Entry	Barrier code assignment	
- Restriction	Remote Access with barrier code: restrictions	
- Unrestricted		
- Outward Restrict		
- Toll Restrict		
- ARS Restrict	Remote Access with barrier code: ARS Restriction	
- Allow List	Remote Access with barrier code: Allowed Lists	
- DisallowLst	Remote Access with barrier code: Disallowed Lists	
* AutoQueuing	Automatic Callback on busy pools or extensions	4–263
- Enable		
- Disable		
Pools	Trunk to Pools assignment	4–59
Toll Type	Toll prefix (1 or 0) requirement	4–37
HoldDiscnct	Hold disconnect interval	4–39
PrncipalUsr	Principal user for personal line	4–42
QCC Prior	QCC queue priority level	4–45
QCC Oper	QCC operator to receive calls	4–48
LS-ID Delay	LS-ID delay for 800 LS-ID module	4–51

	Description	Page
LinesTrunks	***Continued***	
Clock Sync	Clock Syncronization (100D or 800 CO-BRI modules)	4–55
* Primary	Primary Clock	
- Loop		
- Local		
* Secondary	Secondary Clock	
- Loop		
- Local		
* Tertiary	Tertiary Clock	
- Loop		
- Local		
BRI	Basic Rate Interface	
* SPID/DN	Service Profile Identifier (SPID) and Directory Number (DN)	4–185
* Timers	BRI Timers	4–187
- T200 Timer		
- T203 Timer		
- T303 Timer		
- T305 Timer		
- T308 Timer		
T1 Data NW	Switched 56 Dial Plan Routing	4–82

	Description	Page
Extensions		
LinesTrunks	Lines or trunks (buttons on a telephone)	3–57
Line Copy * Single * Block	Copy outside line/trunk options	3–62
Dial OutCd	Pool dial-out code restrictions	3–86
Restriction * Unrestricted * Outward Restrict * Toll Restrict	Outward/toll restrictions	3–89
RestrctCopy * Single * Block	Copy calling restrictions, Allowed Lists, and Disallowed Lists	3–91
Account	Account code entry	3–97
BIS/HFAI	Built in Speakerphone/Hands Free Answer on Intercom	3–74
Call PickUp	Call pickup group	3–110
VoiceSign1	Assign voice pair to provide Voice Announce to Busy	3–76
Ext Status	Extension status: hotel or Group Calling/CMS	3–161
Group Page	Paging group members	3–112
Group Cover	Coverage group members	3–110
Grp Calling	Calling group members and options	3–125
* Hunt Type - Circular - Linear	Hunt Type	3–125
* Delay Announce	Group Calling delay announcement	3–127
* GrpCoverage	Group Coverage receiver	3–130
* Message	Group Calling message waiting indicator	3–136
* Queue Alarm	Group Calling Calls-In-Queue Alarm threshold	3–138
* Xtnl Alert	Group Calling external alert for Calls-In-Queue Alarms	3–141
* Overflow - Number Based - Time Based	Group Calling overflow and thresholds	3–132
* Members	Calling group members	3–119
* Line/Pool	Group Calling line/trunk or pool assignment	3–121
* Group Type - Auto Login - Auto Logout - Integ VMI - Generic VMI	Group type	3–143
ARS Restrict	Assign facility restriction level (Hybrid/PBX only)	3–94
Mic Disable	Limit the use of speakerphone on an MLX telephone	3–98
Remote Frwd	Allow or disallow call forwarding to outside number	3–103
Auth Code	Authorization codes	3–100
Delay Frwd	Delayed Call Forwarding	3–105
TrkTransfer	Enable/disable trunk-to-trunk transfer	3–108

Options	Description	Page
Transfer	Transfer options	
* Return Time	Transfer return time (number of rings)	3–148
* One Touch	One Touch Transfer/One Touch Hold	3–150
- Transfer		
- Manual		
- Automatic		
- Hold		
*Audible	Transfer audible	
- Music On Hold		3–152
- Ringback		
* Type	Type of transfer	
- Voice Announce		3–154
- Ring		
CampOn	Camp-On return time	3–156
CallParkTrn	Call Park return time	3–157
Delay Ring	Number of rings for the Delay Ring interval	3–159
Callback	Callback request number of rings	3–160
Ext Status	Extension status mode	3–161
* Hotel		
* GrpCall/CMS		
SMDR	SMDR options	
* Format	SMDR format	3–163
- Basic SMDR		
- ISDN SMDR		
* Call Length	Minimum length of time before a call is recorded	3–166
* Call Report	SMDR call report type	3–168
- In/Out	Incoming and outgoing calls	
- Out Only	Outgoing calls only	
* New Page		
* Auth Code		3–170
Inside Dial	System dial tone	3–171
* Inside		
* Outside		
Reminder Srv	Time of day reminder service calls are canceled	3–172
Unassigned	Extension number to receive redirected calls made to an unassigned extension	3–174
* QCC Queue		
* Extension		
* Grp Calling		
BehndSwitch	Host system (Behind Switch mode) dial codes for Transfer, Conference or Drop	3–177
* Transfer		
* Conference		
* Drop		

Options	Description *Continued*	Page
Recall Timer * 350 ms * 450 ms * 650 ms * 1 sec	Length of the timed flash sent when Recall is used	3–179
Rotary * Delay * No Delay	Dialed digits on rotary dial trunks	4–30
Cover Delay	Number of rings before a call is sent to group coverage	3–117
Inter-Digit	This option is not yet implemented. See “Interdigit Timers.”	3–181
Ringing Freq	Ringing Frequency for 016 Module	4–431
SecDT Timer	Second Dial Tone Timer	4–433

Tables	Description	Page
Allow List	Establish Allowed Lists	3–181
Allow To	Assign an Allowed List to a given extension	3–183
Disallow	Establish a Disallowed List	3–186
Disallow To	Assign a Disallowed List to a given extension	3–188
ARS	Program Features for Automatic Route Selection (ARS)	
* ARS1+7Dial - Within Area Code - Not Within Area Code	1 + 7-Digit Dialing Requirements	4–282
* ARS Input - 6-Digit - Area Code - Exchange - 1+7	Create/Change ARS Tables	4–284
* Sub A Pools	Subpattern A pool routing	4–290
* Sub A FRL	Subpattern A Facility Restriction Level (FRL)	4–293
* SubA Absorb	Subpattern A digit absorption	4–296
* Sub A Digit	Subpattern A other digits	4–299
* Sub B Start	Subpattern B start time	
* Sub B Stop	Subpattern B stop time	
* Sub B Pool	Subpattern B pool routing	4–290
* Sub B FRL	Subpattern B Facility Restriction Level (FRL)	4–293
* SubB Absorb	Subpattern B digit absorption	4–296
* Sub B Digit	Subpattern B other digits	4–299
* SpecINumber - ARS FRL - ARS Digit	N11 Special Numbers Table	4–301

Tables	Description *Continued*	Page
* Dial 0	Dial 0 Table	4–303
- ARS Pool		
- ARS FRL		
- ARS Digits		
* Sub A Data	Voice and/or data routing for Subpattern A	4–306
- Voice Only		
- Data Only		
- Voice/Data		
* Sub B Data	Voice and/or data routing for Subpattern B	4–306
- Voice Only		
- Data Only		
- Voice/Data		

AuxEquip	Description	Page
MusicOnHold	Line/trunk jack for a music source	4–200
Ldspkr Pg	Loudspeaker Paging equipment	4–202
FAX		3–378
* Extensions	Extension jack to be used for a fax machine	
* Msg Waiting	Message waiting indication	
* Threshold	Fax threshold duration	
MaintAlarms	Maintenance alarms	4–205
VMS/AA	Voice Messaging System and Automated Attendant	4–206
* TransferRtn	Tranfer Return (number of rings)	
* TT Duration	Touch-tone duration	
* TT Interval	Touch-tone interval	

NightSrvce	Description	Page
GroupAssign	Night Service group assignment	3–190
* Extensions		
* Calling Grp		
OutRestrict	Password for use with out of hours calls	3–193
Emergency	Emergency numbers free from password requirement	
ExcludeList	Extensions exempt from Night Service restrictions	
Start	Time of day Night Service is activated	3–197
Stop	Time of day Night Service is de-activated	3–197
Time Control	Turn Night Service Time Control on or off	3–197
* On		
* Off		

	Description	Page
Labeling	Labeling Options	
Directory		3–197
* System	System directory and internal speed dial numbers	3–210
* Extension	Extensions to identify internal callers	3–197
* Personal	Personal Directory listings	
LinesTrunks	Label used to identify line or trunk	3–204
PostMessage	Change posted messages	3–206
Grp Calling	Calling groups	3–208

	Description	Page
Data	Data Options	
Voice/Data	Analog Multiline Telephones with voice and data	4–322
2B Data	Enable 2B Data at MLX port	4–324

	Description	Page
Print	Print system reports	3–214
All	Print all reports	
SysSet-up	System Information report	
Dial Plan	Dial Plan report	
Labels	Label Information report	
Trunk Info	Trunk Information report	
* TIE	Tie Trunk Information report	
* DID	DID Trunk Information report	
* Loop/Ground	GS/LS Trunk Information report	
* General	General Trunk Information report	
* S56 Data	Switched 56 Data Report	
T1 Info	DS1 Information report	
PRI Info	PRI (Primary Rate Interface) Information report	
RmoteAccess	Remote Access (DISA) report	
Oper Info	Operator Information report	
AllowList	Allowed Lists report	
AllowListTo	Access To Allowed Lists report	
DisallowList	Disallowed Lists report	
DisllowListTo	Access To Disallowed Lists report	
ARS	Automatic Route Selection report	
Ext Direct	Extension Directory report	
Sys Direct	System Directory report	
Group Page	Group Paging report	
Ext Info	Extension Information report	
GrpCoverage	Group Coverage Information report	
Grp Calling	Direct Group Calling Information report	

	Description	Page
Print	***Continued***	3–214
Night Service	Night Service Information report	
Call Pickup	Group Call Pickup report	
Error Log	Error Log report	
Auth Code	Authorization Code Information report	
BRI	BRI Information report	

	Description	Page
Cntr-Prg	Centralized telephone programming	
Program Ext	Extension programming	5–3
Copy Ext	Copy extension programming	5–8

	Description	Page
Language	Language options	
SystemLang * English * French * Spanish	System language	3–6
Extensions * Single - English - French - Spanish * Block - English - French - Spanish	Language for a single extension or block of extensions	3–83
SMDR * English * French * Spanish	SMDR language	3–163
Printer * English * French * Spanish	Language for printed reports	3–214

Access to System Programming from the MLX-20 Console

Follow the steps below to begin system programming. All of the procedures in Chapter 3, “Common Administrative Procedures” and Chapter 4, “Programming Procedures,” begin at the System Programming menu shown in Step 4 of the following procedure.

For information about accessing system programming through a PC with SPM, see Chapter 2, “Programming with SPM.”

	Console/Display Instructions	Additional Information	PC
1	**Display the Menu Mode (main menu) screen.**		
	12/24 11:30 Anne Kim Andre Jorge Jose Sarah Show Number Next Page	Press **Menu**.	
2	**Select System Programming.**		
	MENU MODE: Select Feature Press HOME to Exit Directory Messages Posted Msg Sys Program Alarm Clock Maintenance Timer Ext Program	Ext Program does not appear on this screen if the programming console is a QCC.	
3	**Display the System Programming menu.**		
	System Set-up: Review and Exit Type: *xxxx* Mode: *xxxxx* Operator: *xxxxxxxxx* *xxxxxxxxx* *xxxxxxxxx* Exit	On the System Set-up screen, system information appears in place of the *x*s. Type = Voice/Data Mode = Key, Hybrid/PBX, or Behind Switch Operator = Position extension numbers Select Exit.	

4 Make a selection.

```
System Programming:    >
Make a selection
System        Extensions
SysRenumber   Options
Operator      Tables
LinesTrunks   AuxEquip
Exit          NightSrvce
```

Press the button next to your selection.

System Programming Menu

Figure 1–11 shows the two screens that make up the System Programming menu.

```
System Programming:   >
Make a Selection
System        Extensions
SysRenumber   Options
Operator      Tables
LinesTrunks   AuxEquip
Exit          NightSrvce
```

```
System Programming:   >
Make a Selection
Labeling        Language
Data
Print
Cntr-Prg
Exit
```

Figure 1–11. System Programming Menu Screens

Table 1–3 lists the System Programming menu options and a description of each.

Table 1–3. System Programming Menu Options

Option	Description
System	Set system operating conditions.
SysRenumber	Select the system numbering plan and/or reassign extension numbers with 1- to 4-digit numbers that are more appropriate or convenient for your company.
Operator	Assign or remove operator positions and program operator features (such as Operator Hold Timer or QCC options).
LinesTrunks	Program line/trunk options.
Extensions	Program features for extensions (such as restrictions and line assignments).
Options	Program systemwide features (such as Transfer Return and Delay Ring).
Tables	Program features that require entering information in a table (such as Allowed Lists and Disallowed Lists).
AuxEquip	Program auxiliary equipment connected to the system (such as loudspeaker paging and fax).
NightSrvce	Program Night Service features.
Labeling	Program the labels shown on display telephones (such as entries in the System Directory and Posted Messages).
Data	Specify extensions that need voice and data capability.
Print	Print system programming reports (such as system configuration and extension assignments).
Cntrl-Prog	Perform centralized telephone programming (assign features to specific buttons on telephones).
Language	Select the language of the system, MLX display telephones, SMDR reports, and print reports.

Exiting System Programming

Use the information in Table 1–4 to return to the System Programming menu, the main menu (Menu Mode screen), or to the Home screen from within a programming screen.

Table 1–4. Exiting System Programming

To return to ...	On the console press:	On the PC press:
Previous menu	`Exit`	F5
Main Menu	**Menu**	End
Normal call handling	**Home**	Home

Idle States

Some programming procedures can be started only when the entire system, or some part of it, such as a trunk or an extension, is idle (not in use). Some procedures require that a trunk or extension be idle only at the instant of programming. Lengthy procedures require the system, trunk, or extension to remain idle until programming is completed. These procedures wait for the system, trunk, or extension to become idle and then prevent the initiation of any new calls. This condition is called *forced idle*.

NOTE:
If a procedure requires an idle condition, do the programming outside of normal business hours.

If a procedure requires that the system be idle and the system is busy when you begin, you see the screen shown in Figure 1–12.

```
System Busy   Pls Wait

Dial Code:nnnn   S/P:ss/pp



Exit          Enter
```

nnnn = a previously entered extension
ss/pp = the slot and port number of the busy extension

Figure 1–12. System Busy Screen

The screen changes to the appropriate programming screen when the system is no longer busy.

System Forced Idle

When the entire system is forced idle, no calls can be made or received. The following procedures can be performed only when the entire system (every line and every extension) is idle:

- Select system mode.
- Identify system operator positions.
- Renumber system.
- Renumber boards.
- Identify telephones with voice signal pairs for the Voice Announce to Busy feature.
- Identify telephones that need voice and data features.
- Restore system programming information.
- Identify the Music On Hold jack.

When the system is forced idle, the following occurs: multiline telephone users hear a signal, indicating that the telephone cannot be used; display telephone users see the message `Wait: System Busy`; single-line telephone users do not hear a dial tone.

Line or Trunk Idle

Because these procedures require the line or trunk to be idle *only at the instant of programming*, the line or trunk is not forced idle (as described in the previous paragraph). The following procedures can be performed only when the line or trunk being programmed is idle:

- Identify loudspeaker paging extension jack.
- Assign trunks to pools.
- Specify incoming or outgoing DID or tie trunk type.
- Specify tie trunk direction.
- Specify tie trunk E&M signal.

Extension Forced Idle

When a telephone or data terminal is forced idle, no calls can be made or received on that telephone or data terminal. The following procedures can be performed only when the telephone or data terminal being programmed is idle:

- Assign call restrictions.
- Assign pool dial-out restrictions.
- Copy extension assignments.
- Assign lines, trunks, or pools to extensions.
- Assign labels to a personal directory.
- Use centralized telephone programming.

When the telephone is forced idle, the following occurs: multiline telephone users hear a signal, indicating that the telephone cannot be used; display telephone users see the message `Wait: System Busy`; single-line telephone users do not hear a dial tone.

100D Module Idle

The following procedures can be performed only when the 100D module is idle:

- Specify board type.
- Specify frame format.
- Specify board signaling format.
- Specify board suppression format.
- Specify board facility compensation.

Forced Idle Reminder Tones

The forced idle reminder tone is a high-low “doorphone” tone—400 ms of 667 Hz tone followed by 400 ms of 571 Hz. The tone is provided under the following circumstances:

- At the extension, to remind the user that the system or the extension is in the forced idle state
- At the programming console or at a PC running SPM, to remind the system manager that the system (or at least one extension) is in the forced idle state because of administrative activity

In Release 1.1 and higher of the communications system, forced idle reminder tones occur every 20 seconds. You can adjust the volume of these tones with the volume control.

Product Enhancements

Several enhancements were implemented for Releases 1.1, 2.0, 2.1, 3.0, and 4.0. This section briefly describes these enhancements and new features. See the *Feature Reference* and the *Equipment and Operations Reference* for details about each enhancement.

The procedures that cover these enhancements are included in this book. System planning for the enhancements is included in *System Planning*.

Release 1.1 Enhancements

Refer to *Release 1.1 Notes* for detailed descriptions of Release 1.1 enhancements. Release 1.1 includes all Release 1.0 functionality plus the enhancements described in the following sections.

Language Selection

This selection allows you to program the system for the display of prompts, menus, and messages on MLX display telephones in English, French, or Spanish. You can also program the following options in any of these languages, independently of the system language:

- Individual extensions with MLX telephones
- System Programming and Maintenance (SPM)
- System programming reports
- SMDR report headers

MLX-10D™, MLX-20L™, and MLX-28D™ display telephones and MLX-10™ nondisplay telephones are available in three separate versions, with factory-set buttons in English, Spanish, or French. (The MLX-10DP™ is available in the English version only.) In addition, user and operator guides and telephone tray cards are available in all three languages.

Programming and Maintenance

Programming and maintenance enhancements include the following:

- Additional Inspect capability in system programming
- Editing capability (Backspace selection) in extension programming
- Improvements to system reports
- An access log that records the last 20 times maintenance or system programming has been accessed
- Longer (20-second) gap between ring cycles for programming mode and Forced Idle tone

Operational

System operational enhancements include the following:

- Automatic selection of an **SA** button when Conference is invoked (Hybrid/PBX mode)
- Prompting through Conference feature on MLX display telephones
- Relocation of the More prompt on the MLX-20L display
- Display of the number saved on a programmed Last Number Dial or Saved Number Dial button when the button is inspected

SPM

SPM enhancements include operation in English, French, or Spanish, faster backup and restore, and automatic on-screen display of reports as they are created, with a Browse capability for reading the reports.

Equipment

Additional equipment includes the 8102 and 8110 analog telephones, four headsets, two headset amplifiers, and a transparent protective cover for the MLX-10 and MLX-10D telephones. The 8102 and 8110 telephones are also compatible with Release 1.0.

PF Registration

PF registration number AS5USA-65646-PF-E is assigned by the FCC for operating the MERLIN LEGEND Communications System in Hybrid/PBX mode in the United States. (The PF registration is also applicable to Release 1.0 systems.)

Release 2.0 Enhancements

Refer to *Release 2.0 Notes* for detailed descriptions of Release 2.0 and later enhancements. Release 2.0 includes all Release 1.1 functionality plus the enhancements listed below.

Programming

Programming enhancements include the following:

- Extension Copy is a feature that reduces programming time by allowing the use of any extension as a template for programming another extension or block of extensions through centralized telephone programming.
- Integrated Administration provides a single interface through Integrated Solution III (IS III) for programming entries common to the MERLIN LEGEND Communications System and AUDIX Voice Power™.
- Any SPM Version 2.xx (where xx is replaced by numbers) provides a Convert function for use in upgrading the system from Release 1.0 or 1.1. This function converts a backup file from a Release 1.0 or 1.1 system to Release 2.0 and later format, allowing reuse of existing system programming on the upgraded system.
- Forced idle reductions keep system interruptions at a minimum. In general, the smallest necessary component is forced idle during programming activities. For example, renumbering a single extension idles only one extension. Only a few systemwide programming activities, such as setting the system mode and system renumbering, idle the entire system.

Operational

System operational enhancements include the following:

- Coverage VMS Off is a feature that prevents incoming outside calls from going to voice mail. (All other coverage remains active as programmed.) The feature is programmed extension by extension, either through extension programming or through centralized telephone programming.

- A Night Service group can be programmed to include either extensions or a calling group as members. However, you should not program both individual extensions and a calling group into the Night Service group, because individuals will not have a chance to answer before calling group members do.
- When AUDIX Voice Power sends a Leave Message notification to an extension, the system identifies the voice mail system as the sender of the message. When the voice mail subscriber uses the Return Call feature, the call goes to any available voice mail port, not just to the specific port that generated the message. This reduces the chance of getting a busy port.
- Coverage receivers can call coverage senders and have the call receive coverage treatment. If a receiver calls a sender for whom he or she is covering, and the sender is busy or unavailable, the call proceeds to other points of coverage. It does not come back to the receiver who originated the call.
- Enhancements to display prompts include automatic posting of a `Do Not Disturb` message (for MLX display telephones or other multiline telephones, a Posted Message button must be programmed for the `Do Not Disturb` message to be posted automatically). when a user activates the Do Not Disturb feature, and confirmation messages when a user activates Hold, Privacy, Saved Number Dial, and Transfer.
- Direct Inward Dialing (DID) trunk emulation on a T1 facility provides up to 24 DID channels on a single DS1 interface, instead of requiring 24 separate physical trunks.
- A telephone user can send a timed flash (switchhook flash) on a loop-start trunk call on a System Access (**SA**) button.

Fax Attendant System™

Fax Attendant is an application for sending and receiving fax messages; its interface is similar to the voice mail interface provided by AUDIX Voice Power. Fax Attendant System, which co-resides with AUDIX Voice Power on the IS III platform, provides the following services:

- **Fax Call Coverage.** Receives and holds messages for subscribers whose fax machines are busy or out of paper. This service also allows a subscriber to have a personal fax number without having a fax machine.
- **Fax Mail.** Allows subscribers to create and use fax distribution lists, send and receive fax messages, and record personal greetings for incoming fax calls.
- **Fax Response.** Prompts callers to select and receive faxes from a customer-created menu of choices, using touch-tone responses.

408 GS/LS-MLX Module

The 408 GS/LS-MLX module (Releases 2.0 and higher only) combines four line/trunk jacks for ground-start or loop-start trunks and eight extension jacks for MLX telephones on a single module in the control unit.

Primary Rate Interface (PRI)

Primary Rate Interface (PRI) enhancements include the following:

- Connectivity to the 5ESS® Generic 6
- Multiple incoming calls to directory number
- Call-by-Call Service Selection
- Password handling for FTS2000
- Extension ID as Calling Party Number for Automatic Number ID (ANI)

Maintenance

Maintenance enhancements include the following:

- Clear descriptions of module test failures
- Optional printing of hard copy of error logs
- Display that correlates extension numbers to slot/port and logical ID
- Display showing which slots, trunks, and extensions are maintenance busy
- Internal digital switching element (DSE) loopback test for all modules
- B-channel loopback test for MLX modules
- B-channel line or call service states display
- Error log entries for dual-port RAM errors

Release 2.1 Enhancements

Refer to *Release 2.1 Notes* for detailed descriptions of Release 2.1 enhancements. Release 2.1 includes all Release 2.0 functionality plus the enhancements listed below.

Operational

System operational enhancements include the following:

- When a call is forwarded to a multiline telephone that has an Auto Dial or DSS button programmed for the forwarding telephone, the green light next to the Auto Dial or DSS button for the forwarding telephone does not flash.
- People answering calls received on **Cover** buttons are allowed to generate touch tones if their telephones are not outward- or toll-restricted.
- Calls received on personal lines with Do Not Disturb on go immediately to coverage instead of waiting for the coverage delay interval.
- A call put on hold at a **Cover** button can be added to a conference by someone who has a personal line for the call.
- A call put on hold at a **Cover** button can be picked up by any person who has a personal line for the call.
- Calls that have been put on hold at a **Cover**, **SA**, **Shared SA**, or **Pool** button can be picked up by a person who has a personal line button for the call.
- An inside call on hold at an **SA** button can be picked up and transferred by any person with a **Shared SA** button corresponding to the button with the held call.
- Calls that are on hold awaiting transfer can be picked up by any user who has a personal line for the call.
- Beginning with Integrated Solution III Version 1.2, the automatic reconciliation program that was run automatically at 3:00 a.m. has been disabled and can be invoked manually from the User Maintenance menu.
- When a telephone is programmed for Forced Account Code Entry, account codes do not have to be entered when using a programmed Loudspeaker Paging button. In addition, an SMDR record is not generated for calls made to paging ports.
- When an MLX telephone, other than an MLX-20L, is plugged into an MLX port and the Personal Directory does not contain any entries, the allocation of the Personal Directory resource is released. If there are any entries in the Personal Directory, the Personal Directory allocation and the entries in the Personal Directory are saved in the MLX port.
- SMDR call records for calls made on PRI facilities are more accurate than SMDR call records for calls made on non-PRI facilities. Outgoing calls made on PRI facilities receive “answer supervision.” Consequently, SMDR timing for calls made on PRI facilities begins when the call is answered. Timing for calls made on non-PRI facilities begins when dialing is completed. Therefore, an SMDR call record is not generated when a call made on a PRI facility is not answered at the far end.

- The Call Type field and the Called Number field on the SMDR report have been changed for both the Basic and ISDN report formats.
- An 012 port that is programmed as a *generic* voice messaging interface (VMI) port can transfer an outside call to an outside number.
- In a system where the transfer audible option is programmed for Music On Hold and a music source is provided, outside callers who are transferred to a calling group and are waiting in the queue or who are parked or camped-on, hear music while they are waiting. Internal callers never hear music on hold while waiting in the calling group queue or when they are parked, camped-on, or being transferred to another extension.

Installation and Hardware

Installation and hardware enhancements include the following:

- The control unit covers for the MERLIN LEGEND Communications System are the same easy-to-use covers as those for the MERLIN II Communications System.
- A new 012 (T/R) module [apparatus code 517G13 (28) or higher letter] contains a built-in ring generator. The maximum ring equivalency number (REN) supported is 2.2, and the module will ring four ports at one time. Bridging of single-line telephones is not supported due to poor transmission quality.
- A new 008 OPT module (labeled “with RING GEN.”) contains a built-in ring generator. It rings four ports at a time.
- Ferrite cores for the power supply modules are shipped from the factory to comply with FCC Part 15 requirements.
- 3129-WTWA (touch-tone outdoor telephone equipped with cast aluminum housing and armored handset cord with bell ringers)
- 3129-WRWA (rotary-dial outdoor telephone equipped with cast aluminum housing and armored handset cord with bell ringers)

- 3129-WAWA (auto dial outdoor telephone equipped with cast aluminum housing and armored handset cord with bell ringers)
- 3129-WNWA (nondial, automatic ringing on dedicated circuit outdoor telephone equipped with cast aluminum housing and armored handset cord with bell ringers)

Equipment and Operations

Equipment and operations enhancements include the following:

- A new release (Version 2.16) of the System Programming and Maintenance (SPM) software to support international use.
- Support of PRI connection to DEFINITY® Communications Systems
- MLX-10DP telephone, identical to an MLX-10D, except that it provides a jack for access to the PassageWay™ Solution and PassageWay Direct Connection Solution application.

Additional Application Packages, Telephones, Adjuncts, and Adapter

Additional application packages, adjuncts, and adapter enhancements include the following:

- An AT&T Digital Announcer Unit, compatible with all call management systems and tip/ring applications currently available for the MERLIN LEGEND Communications System.
- The HackerTracker™ system software enhancement to the Call Accounting System (CAS) detects abnormal calling activity by allowing monitoring of facilities or authorization code usage.
- A new digital Magic on Hold unit is available in three configurations:
  - Basic Prerecorded Package
  - Personalized Package
  - Custom Production Package
- The MERLIN® Identifier application enables people to receive, store, and use information provided by the local telephone company, specifically, the telephone number of a caller in an area where the service is also supported.
- An Off-Premises Range Extender (OPRE) supports off-premises operation with an off-premises extension capability and extended range operation for tip/ring devices as well as variable gain to improve voice transmission levels.

- PagePac® Plus Loudspeaker Paging Systems do not require system adapters. The controller provides 8 built-in zones (expandable to 56 zones by using up to 3 16-zone expansion units), group zones, talkback, night bell, operator override, tones, door supervision, microphone input, and system access security codes as standard features.
- PassageWay Solution (Release 1.0) software consisting of four applications that run with Microsoft® Windows™ 3.1 or later and provide an interface between an IBM®-compatible personal computer and the MERLIN LEGEND system.
- Four single-line telephones with memory buttons: 710, 715, 725, and 730.
- Four specialty handsets compatible with all MLX telephones and the 3101-series, 3178-NHL, 8102, and 8110 single-line telephones.

Release 3.0 Enhancements

Release 3.0 includes all Release 2.1 functionality plus the enhancements listed below.

Equipment

New hardware includes a variety of components. Additional details are included elsewhere in this book.

- CPU modifications include:

  A processor running at 16 MHz with a 32-bit wide data bus

  1.5 Mbytes of non-volatile (battery-backed) RAM

  4.0 Mbytes of Flash ROM

  PCMCIA memory card interface

  A full-duplex 1200/2400 bps modem

  Error/Status code display for maintenance support
- An 800 GS/LS-ID line/trunk module delivers the calling party's telephone number to the customer premises (MLX display telephones only) if the service is subscribed to by the customer and if it is supported by the caller's telephone company.
- Support for:

  MDC 9000 (6-line, cordless)

  MDW 9000 (6-line, cordless, wireless)

8101 (single-line telephone, desk or wall-mount, data/fax jack, selectable positive disconnect)

2500YMGL and 2500 MMGL (single-line desk telephones, selectable positive disconnect)

Picasso™ Still-Image telephone (for interactive display of still images)

- Videophone 2500 single-line phone with interactive video display
- Pre-fabricated and pre-drilled backboard

Installation, Upgrade Administration, and Maintenance

These are the new MERLIN LEGEND Communications System capabilities:

- SPM (Release 3.18) conversion of translations from Release 1.0, 1.1, 2.0, and 2.1 to 3.0
- Remote operation at 1200/2400bps
- Advice and feedback administration screens for new Release 3.0 functionality
- PCMCIA Memory Card Interface (a Release 3.0 processor board required) allowing:
  - System software installation
  - System software upgrade
  - 800 GS/LS-ID port module firmware upgrade
  - Integrated backup and restore of translations

Automatic and manual options for backup and restore are available on the system. Automatic backup can be scheduled weekly or daily to fit the customer's needs.

- Inter-digit dialing timer values are administrable
- Inspection of Lines/Trunks displays only those lines and trunks configured on system rather than all 80 facilities
- Stations and facilities in Maintenance Busy (both manual and automatic) can be identified by the maintenance monitor

User Features

Security

The Remote Access feature allows people at remote locations to enter the system by dialing the number of a line or trunk designated for remote access. The system can be programmed to require the remote user to dial a barrier code (a type of password) after reaching the system. In earlier versions, the systemwide barrier code length is fixed at 4 digits. Release 3.0 allows a systemwide barrier code length ranging from a minimum of 4 digits to a maximum of 11 digits, with a factory setting of 7 digits. SMDR records are enhanced to provide information for remote access calls. If the remote access call is received on a facility providing Caller ID information (see below), the SMDR report can help trace the call.

Caller ID

Caller information (telephone number) is furnished to MLX display telephones by an 800 GS/LS-ID module using the LS (loop-start) option. This allows customers to screen calls prior to answering the phone, as well as providing calling party information for use with various applications. This function is only available when the customer subscribes to caller identification service from the telephone company, if the telephone company supports that service.

Shared System Access (SSA)

A telephone may have up to 27 Shared SA buttons to expand extension coverage.

Authorization Codes

The Authorization Code feature allows you to make calls using your calling privileges when you're dialing from an extension other than your own. When you enter your authorization code (ranging from 2 to 11 characters and unique across the system), the privileges and restrictions assigned to your home extension override the current restrictions at the host extension. This includes toll restriction, outward restriction, Facility Restriction Level (FRL), Allowed Lists, Disallowed Lists, Night Service Exclusion List, and Dial Access to Pools. All other functions on the telephone are those of the local telephone, not the home extension.

Authorization codes can also be used for the purposes of call accounting through the SMDR printout. The SMDR account code field can hold the authorization code extension number or the authorization code itself.

Direct Voice Mail

If your company has voice mail, this feature allows you to dial a co-worker's voice mailbox directly without ringing that person's extension. Direct Voice Mail is especially useful for transferring calls when a co-worker is not available.

Additional Features

The status of Leave Word Calling (LWC) and Privacy are retained across cold starts.

Caller ID (CLASS℠ ICLID and PRI) are available on primary coverage and return from transfer.

Additional Application Packages, Adjuncts, and Adapter Enhancements

PassageWay™ Direct Connection Solution

PassageWay Direct Connection Solution (Release 2.0) is an AT&T computer telephone integrated product that links a desktop Windows PC to the MERLIN LEGEND's MLX-10DP, MLX-20L, or MLX-28D telephone. The Windows applications are: AT&T Call (autodial/contact manager), AT&T Buzz (screen-pop applications), AT&T Set (station programming interface), and Log Viewer (call log application). PassageWay Direct Connection Solution (Release 2.0) is the version supported on MERLIN LEGEND 3.0.

PagePal

PagePal connects several AT&T and other paging systems to the MERLIN LEGEND Communications System. No other system adapter is necessary for loudspeaker paging.

Fax Attendant 2.1.1

Fax Attendant Release 2.1.1., which co-resides with AUDIX Voice Power on the IS III Release 1.2 platform, provides the same functionality as earlier versions, plus the following enhancements:

- **Personal Fax Messaging.** Inbound faxes can be stored until the subscriber asks that they be printed, at any fax machine he or she specifies, on company premises or off-site (when the subscriber retrieves fax messages remotely).
- **Fax Mail.** Allows subscribers to send fax messages, get fax messages, record personal greetings, and program outcalling.
- **Fax Broadcast.** Provides a simple way to send one fax to as many as 1000 fax numbers.

Call Accounting System (CAS) for Windows

This stand-alone version of CAS takes advantage of the easy-to-use graphical environment offered by Microsoft Windows. Through data communications, it also allows one CAS system to serve multiple business sites.

Group Video Conferencing

Group video conferencing is supported over DS1 (Digital Signal Level 1) facilities with PRI. (Video conferencing has been available since Release 2.0.)

Release 3.1 Enhancements

Release 3.1 includes all Release 3.0 functionality plus the enhancements listed below.

Security Features

New security features include a variety of components. Additional details are included elsewhere in this book.

Call Restriction checking for star codes

Beginning with Release 3.1, the system manager can now add star (*) codes to Allowed and Disallowed Lists to help prevent toll fraud. Star codes, typically dialed before an outgoing call, enable telephone users to obtain special services provided by the central office (CO). For example, in many areas, a telephone user can dial *67 before a telephone number to disable central office-supplied caller identification at the receiving party's telephone. (You must contract with your telephone service provider to have these codes activated.)
When users dial star codes, the MERLIN LEGEND system's Calling Restrictions determine whether the codes are allowed. If allowed, the system's Calling Restrictions are reset, and the remaining digits that the users dial are checked against the Calling Restrictions.

Trunk-to-Trunk Transfer on a per-station basis

This enhancement to the trunk-to-trunk feature enables the system manager to allow or disallow trunk-to-trunk transfer *on a per-station basis.* Beginning with Release 3.1, the default setting for all stations is restricted.

Programmable Second Dial Tone Timer

Beginning with Release 3.1, the system manager can now assign a second dial tone timer to lines and trunks to help prevent toll fraud (for example, when star codes are used). After receiving certain digits dialed by a user, the CO may provide a second dial tone, prompting the user to enter more digits. If this second dial tone is delayed, and the user dials digits before the CO provides the second dial tone, there is a risk of toll fraud or the call being misrouted. The second dial tone timer enables the system manger to make sure that the CO is ready to receive more digits from the caller.

A Disallowed List containing numbers frequently associated with toll fraud

Beginning with Release 3.1, Disallowed List #7 now contains default entries, which are numbers frequently associated with toll fraud. By default, Disallowed List #7 is automatically assigned to both generic and integrated VMI ports used by voice messaging systems. The system manager must manually assign this list to other ports.

Pool Dial-Out Code restriction for all extensions by default

Beginning with Release 3.1, the default setting for the Pool Dial-Out Code restriction has changed to restricted. No extension or remote access user with a barrier code has access to pools until the restriction is removed by the system manager.

Outward restrictions for VMI ports by default

Beginning with Release 3.1, ports assigned for use by voice messaging systems (generic or integrated VMI ports) are now assigned outward restrictions by default. If a voice messaging system should be allowed to call out (for example, to send calls to a user's home office), the system manager must remove these restrictions.

Security Alert:
Before removing restrictions, it is strongly recommended that you read "Appendix A: Customer Support Information."

New default Facility Restriction Level (FRL) for VMI ports

Beginning with Release 3.1, the default FRL for VMI ports has changed to 0, restriction all outcalling.

New default FRL for the Default Local Route Table

Beginning with Release 3.1, the default FRL has changed to 2 for the Default Local Route Table. Now, system managers can easily change an extension default of 3 to 2 or lower in order to restrict calling. No adjustment to the route FRL is required.

New maintenance procedure for testing outgoing trunk problems

A password is now required for technicians to perform trunk tests.

Security Alert:
The enhancements in Release 3.1 help increase the security of the MERLIN LEGEND System. To fully utilize these security enhancements, be sure to read and understand the information in these upgrade notes.

Release 4.0 Enhancements

Release 4.0 includes all Release 3.1 functionality plus the enhancements listed below:

Equipment

New 016 tip/ring module

This new module supports the 200 station dial plan by providing sixteen ports for tip/ring devices. Applications that use a tip/ring interface can connect to this board. All sixteen ports can ring simultaneously. Four touch-tone receivers (TTRs) are included on the module as well. The module's ringing frequency (default 20 Hz) can be changed through programming to 25 Hz for those locations that require it.

New 800 NI-BRI module

This new module connects NI-1 BRI trunks to the MERLIN LEGEND system for high-speed data and video transmission.

Ssytem Features

Support for up to 200 stations

Release 4.0 has an expanded dial plan that supports up to 200 tip/ring devices.

Support for National ISDN BRI Service

This service provides a low-cost alternative to loop-start and ground-start trunks for voice and digital data connectivity to the Central Office. Each of the two B (bearer)- channels on a BRI line can carry one voice or one data call at any given time. The data speeds on a B-channel are up to 14.4 kbps for analog data and up to 64 kbps for digital data, which is necessary for video conferencing and other video applications. Release 4.0 supports the IOC Package "S" (basic call handling) service configuration and Multi-Line Hunt service configuration on designated CO switches.

Support for 2B Data applications

Release 4.0 has certified group and desktop video applications that use two B-channels to make video/data calls from endpoints (stations) that are enabled to use 2B Data. The endpoints that support these applications connect to an MLX-port on the MERLIN LEGEND system. 2B Data applications can make use of the NI-1 BRI, PRI, or T1 Switched 56 network interfaces to make outside connections using one or two data channels at a time.

Support for T1 digital data transmission

Release 4.0 expands its T1 functionality by providing access to digital data over the public switched 56 kbps network in addition to data Tie-Trunk services. Users who have T1 facilities for voice services can now use them for video calls at data rates of 56 kbps per channel (112 kbps for video calls using two channels). The Release 4.0 T1 offering also includes point-to-point connectivity over T1 Tie-trunks, allowing customers to connect two MERLIN LEGEND Communications Systems or a MERLIN LEGEND Communications System with a DEFINITY® Communications System. The two communications systems can be co-located or off-premises.

Downloadable Firmware for 016 T/R board and the NI-BRI board.

The PCMCIA technology introduced in Release 3.0 continues to support these two new boards in Release 4.0 for installation and upgrade. A Release 3.0 or later processor is required for PCMCIA technology.

User Features

Delayed Call Forwarding

Each user can program a Forwarding Delay setting for the Forward, Remote Call Forwarding, or Follow Me features. The forwarding delay is the number of times that a call rings at the forwarding extension before the call is sent to the receiver. During the delay period, the user can screen calls by checking the displayed calling number (if it is available). The delay can be set at 0 to 9 rings. The factory setting for Forwarding Delay is 0 rings (no delay).

Voice Announce on the QCC

The QCC operator can enable the fifth **Call** Button to announce a call on another user's speakerphone if the destination telephone has a Voice Announce capable **SA** button available. A QCC cannot receive Voice Announce calls; they are received as ringing calls. The factory-set status for the fifth **Call** Button is to have Voice Announce disabled.

Time-based option for overflow on Calling Group

Release 4.0 has added a *time* limit for calls in queue in addition to the previous *number* limit. If the Overflow Threshold Time is set to a valid number between 1–900 seconds, calls that remain in the Calling Group Queue for the set time are sent to the Overflow Receiver. If the Overflow Threshold Time is set to 0, Overflow by time is turned off. The factory-set time limit is 0 seconds (Overflow by time off).

Single-Line Telephone Enhancements

- **Disable Transfer.** Through centralized telephone programming, the system manager can disable the ability to transfer calls by removing all but one **SA** or **ICOM** button from the telephone.
- **No Transfer Return.** When a handset bounce in its cradle, the MERLIN LEGEND system interprets that as a switchhook flash and attempts to transfer a call. When the transfer attempt period expires, the user's telephone rings. Release 4.0 eliminates this unintended ringing by disconnecting the call in situations where a switchhook flash is followed by an on-hook state when dial tone is present.
- **Forward Disconnect.** All ports on 012 and 016 modules now send forward disconnect to all devices connected to them when forward disconnect is received from the CO. This enhancement prevents the trunk/line form being kept active when one end disconnects from the call. If an answering machine is connected to the port, it will not record silence, or busy tones, or other useless messages. This is a non-administrable operation.

Security Features

7-digit password for SPM

Release 4.0 has increased system security by requiring a 7-digit password when using SPM to perform remote administration or when performing the Trunk Test procedure. This password is to be used in addition to the Remote Access barrier codes.

Programming with SPM

2

The System Programming and Maintenance (SPM) software package offers an alternate method of programming the MERLIN LEGEND Communication System using a PC. This method frees the system programming console for other uses and also provides the additional functions listed below:

- Backing up system programming information
- Restoring system programming information from a backup
- Converting system programming information from one release to another (part of the upgrade procedure)
- Upgrading your communications system to a newer release
- Printing, viewing, and storing reports
- Programming the communications system remotely
- Programming in surrogate mode

SPM runs on a DOS-based PC as a stand alone program or on a UNIX® System platform as part of Integrated Solution II or Integrated Solution III (IS II/III). It is available on a 3.5-inch diskette for DOS or UNIX, or on a 5.25 inch diskette for DOS.

NOTE:
SPM software can be used directly from the floppy disks on a DOS machine; however, if your PC has a hard disk, you should install SPM onto the hard disk.

This book describes the use of SPM on a PC with a DOS operating system. If your system has the IS II/III application, you have the UNIX System version of SPM.

For information about accessing SPM from the IS II/III application, refer to the following books:

- *Integrated Solution III System Manager's Guide*, order no. 555-601-010
- *Integrated Solution III Installation and Maintenance Guide*, order no. 555-601-011
- *Integrated Solution II System Manager's Guide,* order no. 555-600-726
- *Integrated Solution II Installation and Maintenance Guide*, order no. 555-600-720

System Requirements

To use SPM for system programming, you need the SPM diskette and an approved PC with version 3.3 (or later) of MS-DOS®. At a minimum, your PC should support and include the following items:

- At least 640 kbytes of RAM
- A floppy disk drive that will accommodate the SPM diskette (3.5-inch or 5.25-inch)
- A monochrome or color monitor
- A serial port that can use either a DB-9 or DB-25 connector

  For a DB-9 connector, use a 9-pin to 25-pin adapter to attach the 25-pin connector of the RS-232 interface cable.
- An RS-232 interface cable of appropriate length for your site connection(s)

Depending on how you connect the PC to the control unit, you will also need the following items:

- Direct local connection, with the PC within 50 ft. of the control unit.
  - Either a 355AF modular adapter (if there is a male connector on the interface cable) or a 355A modular adapter (if there is a female connector on the interface cable)
  - A 4-pair modular cord (D8W)
- Direct local connection, with the PC more than 50 ft. from the control unit.
  - 355AF adapter
  - EIA crossover cable
  - Two Z3A2 Asynchronous Data Units (ADUs)
  - ADU crossover cable
  - 400B2 power adapter

  - 2012D transformer
  - BR1A-4P adapter and 102 connecting block or 103 connecting block
  - 248B adapter
  - 8-position wall jacks
  - 4-pair plug-ended cable
  - D8W cords
  - D6AP power cord
  - EIA-232-D cables
- Modem (local or remote) connection
  - A modem that supports 1200- or 2400-bps connections

In addition, a parallel printer is useful for reports (the PC needs a parallel port for the connection).

NOTE:
SPM uses Interrupt 4 and I/O address 3F8 for COM1. It uses Interrupt 3 and I/O address 2F8 for COM2.

Installing the SPM Software

Before you install or run SPM, use `diskcopy` on a DOS PC (see your operating system guide) to make a backup copy of the SPM diskette and store the original in a safe place. Use the backup copy to run the installation program.

For installing SPM on a DOS PC, follow the appropriate instructions in the next section of this book.

NOTE:
If your PC does not have a hard disk, you do not need to run the installation program. Go to “Initializing the SPM Software.”

DOS Installation

Use the following procedure to install SPM on the hard drive of a DOS PC.

NOTE:
If you are updating SPM, you do not need to remove the current SPM files. The new files will overwrite your current SPM files.

Considerations

Review the following items before you begin the installation procedure.

The installation program automatically performs the following:

- Checks available space on the hard disk. If space is insufficient, the installation is terminated and an error message is generated.
- Checks the autoexec.bat and config.sys files. If either file is write-protected, the installation is terminated and an error message is generated. SPM must make changes to these files.
- Saves a copy of autoexec.bat as autoexec.old.
- Saves a copy of config.sys as config.old.
- If autoexec.bat has not already been configured for SPM, performs the following:
  - Adds `c:\spm` to the path statement
  - Adds the line `SET AMS_PATH=C:`
  - Adds the background print command `PRINT /D:PRN /B:4096 /U:3 /M:200 /S:1 >NUL`
- Adds the following line to config.sys if it is not already present `DEVICE=C:\ANSI.SYS`.
- Copies the ansi.sys file from the floppy disk to c:\.
- Creates the directory c:\spm.
- Copies the following files from the floppy disk into c:\spm:
  - spm.exe
  - ams_hlp.eng (English language help file)
  - ams_hlp.fre (French language help file)
  - ams_hlp.spa (Spanish language help file)
- Creates the following directories if they do not already exist:
  - c:\spm\backup
  - c:\spm\reports
  - c:\spm\tmp.
- Does one of the following:
  - Creates the SPM configuration file c:\spm\ams.cfg, if it does not already exist. In this case, the ams.cfg file consists of only one line, in which the language attribute is specified: `LANG 1` if you specified English or did not specify a language with the `install` command;
  - Modifies the ams.cfg file, if it already exists, by adding or changing the LANG value.

Follow the steps below to install SPM on the PC's hard disk.

1 Switch to Drive A, if it is not already the current drive.

`A:>` appears on the screen.

2 Insert the backup copy of the SPM diskette into Drive A.

3 Type one of the commands shown below and press Enter↵.

- *install*
- *install french*
- *install spanish*

Because English is the default language, `install` and `install english` have the same result. If you do use the language argument (`english`, `french`, or `spanish`), you must type it in lowercase letters as shown. The command `install` may be upper case or lower case.

4 Wait for the message shown below to appear.

```
SPM HARD DISK INSTALLATION PROGRAM
Strike a key when ready
```

5 Press any key to begin the installation.

When the installation is finished, the following message appears:

```
SPM HARD DISK INSTALLATION IS NOW COMPLETE
YOU MUST REBOOT YOUR SYSTEM BEFORE USING SPM
```

6 Remove the SPM diskette from Drive A and reboot your system.

The installation procedure is complete. Go to "Initializing the SPM Software."

Initializing the SPM Software

To run correctly, the DOS version of SPM requires certain information (transmission speed, type of monitor, and so on). You need to supply this information only once, the first time you run SPM.

The information you provide during the initialization process is written to the SPM configuration file (ams.cfg). If you need to change this information at some later time, you can do so in either of the following ways:

- Use any of the options in Table 2–1 to change the information in ams.cfg.
- Edit the ams.cfg file. (If you are unsure about editing the file, you can remove it. You are prompted to reinitialize the next time you invoke SPM. The file is created at that time.)

NOTE:
The DEBUG attribute is also specified in ams.cfg as `DEBUG=0` (off), the default setting, or `DEBUG=1` (on). This attribute is used to enable the Escape-to-Shell feature of SPM, activated by pressing [Ctrl] + [F9]. To turn DEBUG on, you must edit the ams.cfg file; it is not part of the initialization process. The DEBUG attribute is for use by qualified service personnel only.

Table 2–1. SPM Configuration File (ams.cfg) Options

Option	Use
`spm -com1`	Specifies COM1 as the serial communications port used by SPM
`spm -com2`	Specifies COM2 as the serial communications port used by SPM
`spm -s1200`	Specifies modem speed of 1200 bps
`spm -s2400`	Specifies modem speed of 2400 bps
`spm -color`	Specifies color monitor
`spm -mono`	Specifies monochrome monitor
`spm -l english`	Specifies English as the PC language
`spm -l french`	Specifies French as the PC language
`spm -l spanish`	Specifies Spanish as the PC language

Follow the steps below to perform the SPM initialization.

1 Type *spm* and press [Enter] to display the SPM Welcome screen shown in Step 2.

- Make your entry at the `C:>` prompt if your PC has a hard disk.
- Make your entry at the `A:>` prompt if you are using the floppy drive.

2 Press any key.

```
Welcome to SPM
The MERLIN LEGEND
System Programming
& Maintenance Utility
Please press any key
to continue
Version X.XX
```

X.XX = current version of SPM

The screens shown in Steps 3 through 7 appear only if the system has not been initialized. Otherwise, the screen shown in Step 8 appears.

3 Select the serial communications port used for SPM and press Enter↵.

```
COMM PORT:
1.  Comm 1
2.  Comm 2
Enter selection #
```

Type *1* for serial port 1 (COM1).
Type *2* for serial port 2 (COM2).

4 Select the communications port speed and press Enter↵.

```
Speed:
1.  1200
2.  2400
Enter selection #
```

Type *1* for 1200 bps.
Type *2* for 2400 bps.

5 Respond to the color prompt and press Enter↵.

```
COLOR
Enter selection (y/n):
```

Type *y* if you have a color monitor.
Type *n* if you do not have a color monitor.

6 Select a language and press Enter↵.

```
Language:
1.  English
2.  French
3.  Spanish

Enter selection #:
```

Type *1* for English.
Type *2* for French.
Type *3* for Spanish.

The language you select here becomes the SPM (PC) language.

7 Review your selections.

```
SPM CONFIGURATION:
Comm Port:  x
Speed: x
Color: x
Desire change (y/n)?
```

x = the values entered for each entry in Steps 3 through 6

- To change any of the information shown, type *y* and press Enter↵. The screen shown in Step 3 appears. Repeat Steps 3 through 6.
- To save the information shown, type *n* and press Enter↵.
  - — If the PC is connected to the processor, the SPM Main Menu appears as shown in Step 8.
  - — If the PC is not connected, go to "Connecting the PC."

8 Press the function key that corresponds to the option you want.

```
     SPM Main Menu
Menu: Select Function
F1  Sys Program   Maintenance  F6
F2  Backup        Restore      F7
F3  Boards        Pass-Thru    F8
F4  Print Opts    Password     F9
F5  Monitor       Language     F10
```

NOTE:
The function keys shown on either side of the display are included here for quick reference. See "SPM Screens" for details on using the PC keys in SPM.

Connecting the PC

There are three ways to connect the PC to the control unit. Choose the method below that is most useful for your installation.

- Direct local connection
- Local modem connection
- Remote modem connection

Direct Local Connection

For a direct local connection, you must connect the PC to the system programming jack. This is the lower modular RS-232 jack on the processor module, as shown in Figure 2–1. (The upper jack is reserved for the SMDR printer.)

To connect a PC more than fifty feet from the control unit, see Figure 2–2.

For direct local connections, the system supports speeds of 1200 and 2400 bps.

NOTE:
You must use a direct local connection to program in surrogate mode.

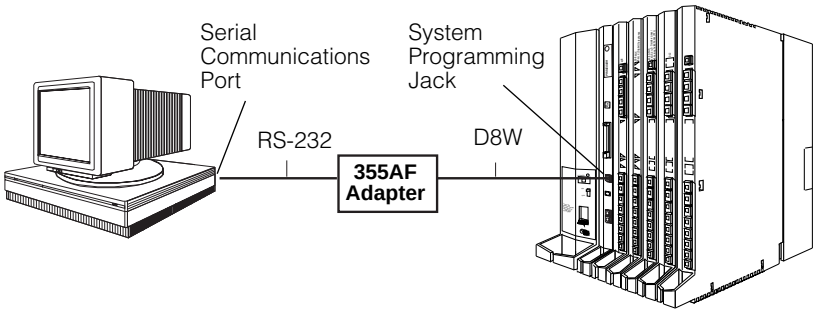

Figure 2–1. Direct Local Connection

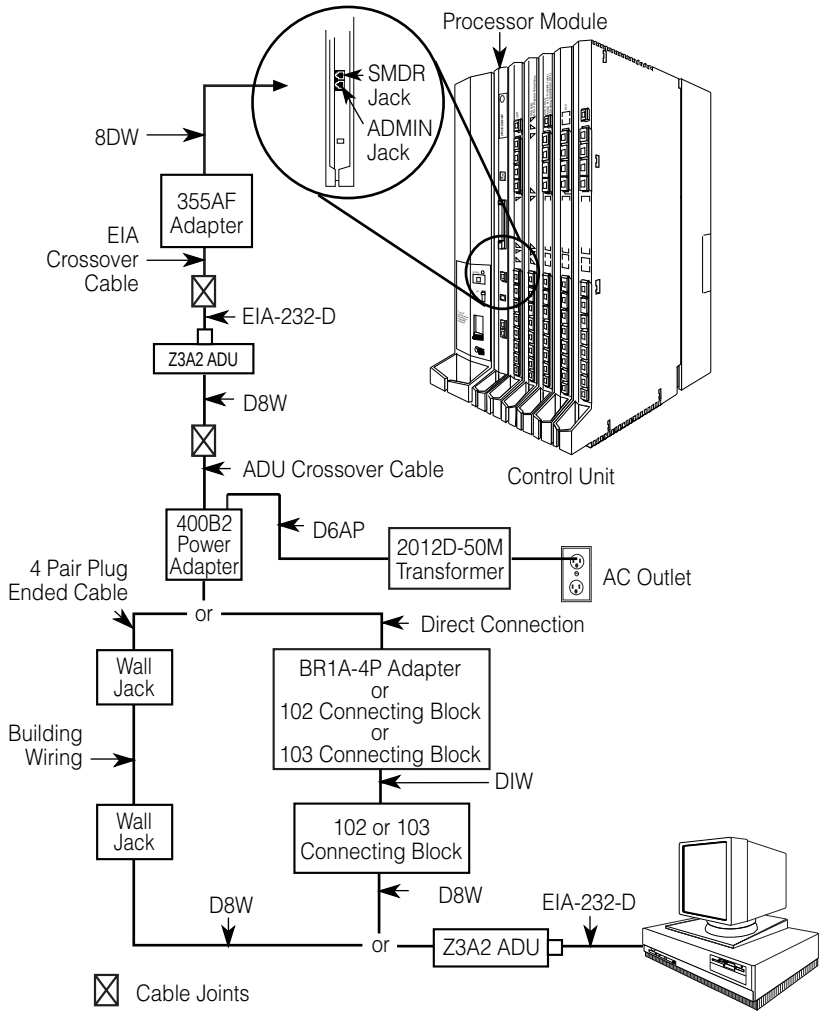

Figure 2–2. Direct Local Connection, PC More Than 50 ft. Away

Local Modem Connection

For a local modem connection, you must use a modem (either connected to, or built into the PC) to access the internal modem in the control unit. Connect the modem to an 012 or 016 module in the control unit, as shown in Figure 2–3.

The internal modem operates at speeds of 1200 and 2400 bps.

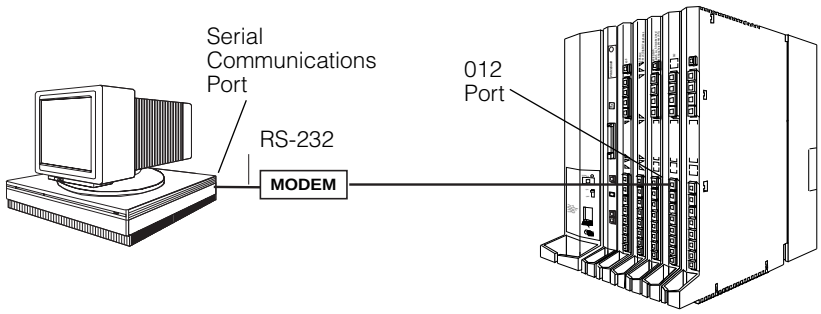

Figure 2–3. Local Modem Connection

Remote Modem Connection

For a remote modem connection, you must use a modem (either connected to, or built into the PC) to access the internal modem in the control unit. You must also use a dial-up connection, as shown in Figure 2–4. See “Accessing SPM” for details on accessing SPM with a remote modem connection.

The internal modem operates at speeds of 1200 and 2400 bps.

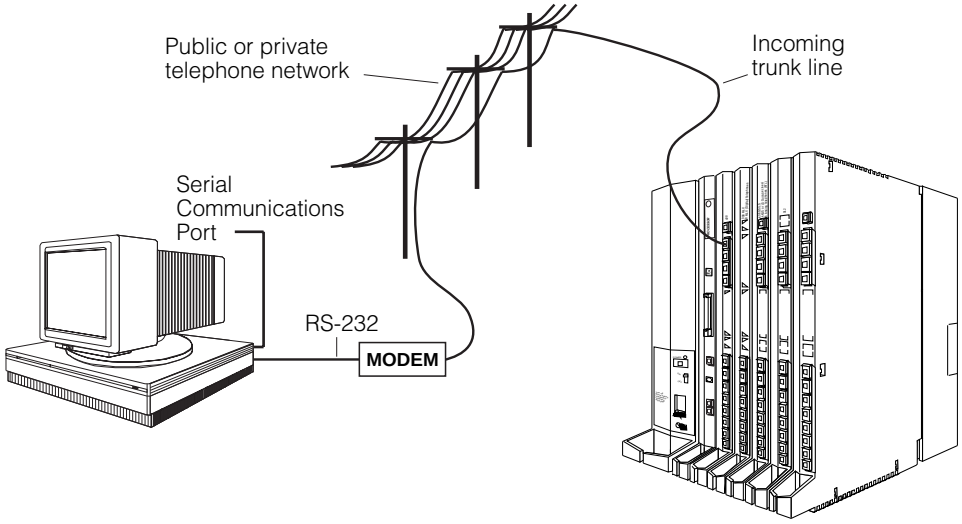

Figure 2–4. Remote Modem Connection

NOTE:
Remote access (modem connection) has priority over local access (direct connection), unless a backup or restore procedure is in progress through a direct local connection. If a modem connection is attempted while any other type of on-site programming is in progress (either at the system console or at a directly-connected PC), the system sends a message to the on-site programmer. The message indicates that a modem connection is being established and the on-site programming session is terminated.

Accessing SPM

The procedure for accessing SPM depends on whether your PC is connected to the control unit with a modem (either local or remote) or without a modem (direct). This section covers both of these access procedures.

With a Direct Local Connection

To access SPM when your PC is connected directly to the control unit, follow the steps below.

1 Set up the appropriate physical connections between the PC and the control unit.

See “Connecting the PC.”

2 If you installed SPM on the hard disk of the PC, go to Step 5.

3 If the PC does not have a hard disk, insert the SPM diskette into Drive A.

4 Type *a:* and press [Enter↵].

A:> appears on the screen.

5 Type *spm* and press [Enter↵] to display the SPM Welcome screen shown below.

```
   Welcome to SPM
 The MERLIN LEGEND
 System Programming
& Maintenance Utility
Please press any key
    to continue
    Version X.XX
```

X.XX current version of SPM

6 Press any key to display the SPM Main Menu shown below.

```
      SPM Main Menu
Menu: Select Function
F1  Sys Program   Maintenance  F6
F2  Backup        Restore      F7
F3  Boards        Pass-Thru    F8
F4  Print Opts    Password     F9
F5  Monitor       Language     F10
```

- If the SPM Main Menu does not appear or if the information on the screen is garbled, press any key again.
- If the COM Port (communications port) screen appears instead of the SPM Main Menu, it indicates that the SPM software has not been initialized. See “Initializing the SPM Software.”

NOTE:
The function keys shown on either side of the display are included here for quick reference. See “SPM Screens” for details on using the PC keys in SPM.

7 To select an option, press the function key that corresponds to the option you want. For example, to select Language press [F10].

With a Local or Remote Modem Connection

The method you use to access SPM by modem depends on whether you are programming on site (locally) or from a remote location.

- If you are on site, the modem must be connected to an 012 or 016 module on the control unit. To establish a connection to the control unit’s internal modem, dial **10*.

- If you are at a remote location, do one of the following:
  - Place a call to the system on a Remote Access line, enter the barrier code (if required), and dial the code for the internal modem (**10*).
  - Place a voice call to the system using the line to which the modem is connected and ask the operator to transfer you to the modem (by pressing **Transfer**, dialing **10*, then hanging up the telephone). When you hear the modem answer tone, switch to data mode.

Considerations

Review the following items before you begin the modem connection procedure.

Set the Programming Language

If you prefer to program in a language other than the current SPM language setting, see "Language."

Modem Connections

You must make a data connection to a modem. The following modem dialing commands are for Hayes® and Hayes-compatible modems. These may not be the commands your modem uses—refer to the user guide that came with your modem for specific information.

- If the PC is in the same location as the control unit, type **10*.
- If the PC is in a remote location and your system has activated the Remote Access feature, type the following and press [Enter↵]:
  - Without barrier codes type:

ATDT; the remote access telephone number; and *W*10*.
For example: *ATDT12015551234 W*10* [Enter↵].

  - With barrier codes type:

ATDT; the remote access telephone number; the barrier code preceded by a "W" and *W*10*. The barrier code in the example below is 555555.
For example: *ATDT12015551234 W555555 W*10* [Enter↵].

The password prompt appears on the screen when the connection is made. (You may have to press [Enter↵] more than once to get the password prompt.)

- If the PC is in a remote location and your system has not activated the Remote Access feature, do the following:
  - Use the main telephone number to place a voice call to the system on the line to which the modem is connected.
  - Instruct the operator to transfer you to the modem (by pressing **Transfer**, dialing **110*, then hanging up the telephone).
  - To put the modem on line, type *ATH1* and press [Enter↵], then hang up the telephone.

NOTE:
If you enter a telephone number of fewer than 11 digits, you must end it with a pound sign (#).

To access SPM through a local or remote modem connection, follow the steps below.

1 Set up the appropriate physical connections between the PC and the control unit. See "Connecting the PC."

2 Type *spm* and press [Enter↵] to display the SPM Welcome screen shown below.

```
Welcome to SPM
The MERLIN LEGEND
System Programming
& Maintenance Utility
Please press any key
to continue
Version X.XX
```

X.XX = current version of SPM

If you wish to program in a language other than the current language set for SPM, see "Set the Programming Language."

3 Press any key to display a blank screen on which you can enter modem commands. (You may have to press the key several times.)

4 Make a data connection to the modem of the control unit.

See "Modem Connections." When the connection is made, the password prompt appears as shown in Step 4.

5 Type the SPM password to display the SPM Main Menu shown in Step 6.

```
Enter Password:
```

The password does not display as you type it.

6 To select an option, press the function key that corresponds to the option you want. For example, to select Language **press** F10**.**

```
        SPM Main Menu
   Menu: Select Function
F1 Sys Program   Maintenance F6
F2 Backup        Restore     F7
F3 Boards        Pass-Thru   F8
F4 Print Opts    Password    F9
F5 Monitor       Language    F10
```

NOTE:
The function keys shown on either side of the display are included here for quick reference. See “SPM Screens” for details on using the PC keys in SPM.

Using SPM

This section describes how to use the SPM screens, SPM Help, and the SPM options listed below.

- Backup
- Boards
- Browse
- Convert
- Language
- Maintenance
- Monitor
- Pass-Thru
- Password
- Print Options
- Restore
- System Programming

NOTE:
Some of the procedures described in this section should be performed by qualified service personnel only.

SPM Screens

SPM screens simulate the system programming console. Each SPM screen includes a 7-line by 24-character console simulation window that corresponds to the display area of the MLX-20L™ telephone. To the right and left of this console simulation window are columns that list the keys corresponding to similarly located buttons on the MLX-20L telephone. If you are working with Version 2.0 or higher, the version number appears in the upper left corner of the screen (for example, V4). Figure 2–5 illustrates the SPM display screen.

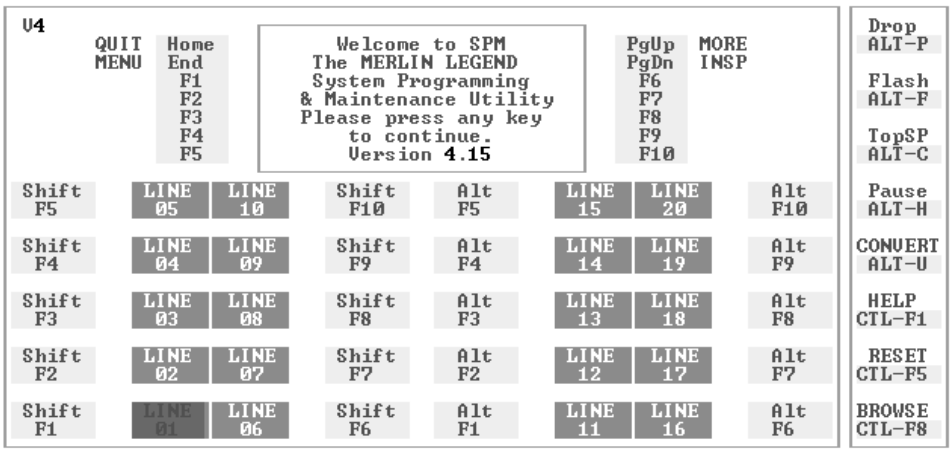

Figure 2–5. SPM Display

F1 through F5, and F6 through F10 display on either side of the console simulation window. They represent the function keys to use when you select screen options. When a screen contains several choices, press the function key identified by the label next to your choice. (If you were programming on the console, you would press the telephone button next to your choice.)

Below the console simulation window are 20 simulated line buttons. The 20 line buttons can be selected using the arrow keys to position the cursor on the appropriate button. Using PgDn (the Inspect feature), you can determine the status of each line and the features programmed on each line according to the letter that appears next to the line number (see below).

On the PC screen, the letters R and G represent the ON state of the red and green LEDs, respectively, that are on the console. For example, if a line, trunk, or pool is assigned to a line button, on the console a green LED lights next to the button. On the PC screen, the letter G (for green) displays next to the button. Similarly, if a line, trunk, or pool is not assigned to a line button, neither G nor R display next to the button on the PC screen. If a trunk is assigned to a pool, an R (for red) displays on the PC screen.

The labels in the column on the right side of the screen show key combinations that correspond to buttons on the MLX-20L telephone. Table 2–2 describes the function of PC keys in SPM.

Table 2–2. Function of PC Keys in SPM

PC Key	Console	SPM Function
Home	**Home**	**Quit.** Exit from SPM and return to the DOS prompt when you finish with system programming. If you are using a modem, the call is disconnected.
End	**Menu**	Return to the SPM Main Menu.
PgUp	**More**	Display more menu items (when there is another screen and the > symbol appears next to the key).
PgDn	**Inspct**	Show the current information that has been programmed for a feature or button.
Alt + P	**Drop**	Enter a stop in a speed dialing sequence. This combination also deletes an entry in a field on any screen except one in which you are entering a speed dialing sequence.
Alt + F	**Conf**	**Flash.** Enter a switchhook flash in a speed dialing sequence.
Alt + C	n/a	**TopSP.** Return to the top of the System Programming menu.
Alt + H	**Hold**	**Pause.** Enter a pause in a speed dialing sequence.
Alt + U	n/a	**Convert.** Convert a backup file from its original Release format to a different Release format.
Alt + N	n/a	Toggle modem speed between 1200 to 2400 bps.
Ctrl + F1	n/a	**Help.** Display a help screen about SPM operations. To exit from Help, press End.

Continued on next page

Table 2–2, *Continued*

Ctrl + F5	n/a	**Reset.** Reset the communications port. For example, if the information on the screen is garbled, try exiting from and then re-entering the screen. If the screen remains garbled, use Ctrl + F5 to clear the screen and return to the SPM Welcome screen. Note that using Ctrl + F5 drops the modem connection.
Ctrl + F8	n/a	**Browse.** View print reports saved with Print Opts.
Ctrl + F9	n/a	**Escape to shell.** To use this key sequence, you must set DEBUG=1 in the SPM configuration file ams.cfg. You can then use this key sequence to execute DOS (or UNIX System) commands. To return to SPM, type `exit`.
Enter↵	`Enter`	The Enter↵ key on your PC can be used instead of F10 when `Enter` appears as a choice in the console simulation window.
Bksp	`Backspace`	The Bksp key on your PC can be used instead of F9 (`Backspace`) when it appears as a choice in the console simulation window.
Del	`Delete`	The Del key on your PC can be used instead of F8 (`Delete`) when it appears as a choice in the console simulation window.
↑ ↓ ← →	n/a	The up, down, left, and right arrow keys can be used to highlight selections in a menu and to select the 20 line buttons below the console simulation window.

SPM Main Menu Options

The SPM Main Menu provides access to system programming and to the SPM functions listed in Table 2–3.

Table 2–3. SPM Main Menu Options

SPM Menu	Function
Sys Program	To program the system
Backup*	To make a backup copy of your system programming and store it on diskette or on hard disk
Boards*	Shows which modules (port boards) are in each slot of the control unit and allows you to assign boards to slots
Print Opts*	Directs reports to the printer or to the PC for storage on diskette or hard disk
Monitor*	Restricted to use by your technical support organization
Maintenance	Restricted to use by your technical support organization and qualified technicians
Restore*	To restore your system programming from diskette or hard disk
Pass-Thru*	(IS II/III only) To make a remote connection, through the control unit, to an IS II/III PC to administer applications on the IS II/III PC.
Password*	To change the password for remote entry into the system.
Language	To select a language (English, French, or Spanish) for the console simulation window on the PC. (There is also a Language option available on the System Programming menu that allows you to set the system language.)

* SPM option only. Not available on the MLX-20L system programming console. To be used only by qualified service personnel.

SPM Help

To access the SPM help screens, press Ctrl + F1.

To review the help screens press, PgUp and PgDn.

To return to the first Help screen, press Home.

To exit from SPM Help, press End.

A typical help screen is shown in Figure 2–6.

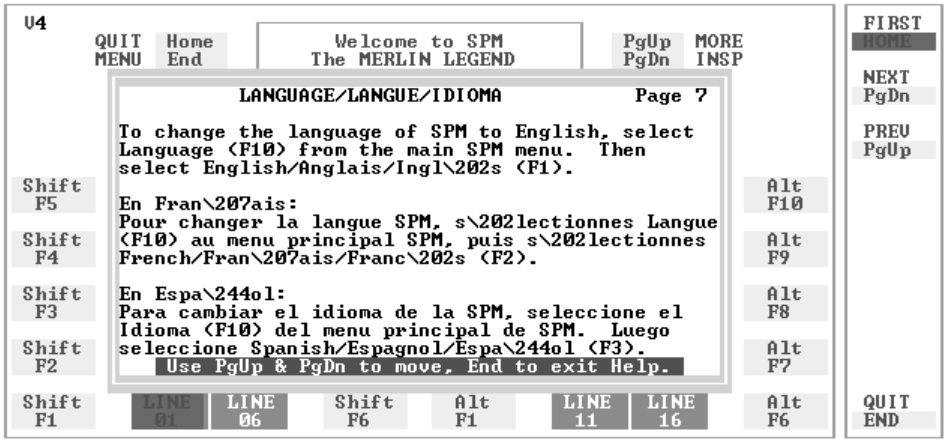

Figure 2–6. SPM Help

Backup

The Backup procedure is used by qualified service personnel to create a file of system programming information in the \spm\backup directory (on the hard drive of the PC) or in the root directory of a diskette (on the floppy disk drive of the PC).

NOTE:
Back up your system programming information on a regular basis. A current backup file allows you to quickly and easily restore your system, if the need arises.

Determining the Release Number of a Backup File

If you have a backup diskette but do not know its release number, you may be able to find this information in the backup header. Beginning with later versions of Release 1.1, the backup file contains a backup header 128 bytes long. Approximately 59 of these bytes are currently used. Bytes 55 through 59 of the header contain the MERLIN Legend Communication System Release number, as shown in Table 2–4. (Release 1.0 and early versions of Release 1.1 do not contain this information in readable form.)

Table 2–4. Backup Header: Release Number

	Release No.	Build No.	System Size	Mode
Size	2 bytes	12 bytes	1 byte	1 byte
Examples	03 00 02 01	32	01	01 - Key 02 - Behind Switch 03 - Hybrid/PBX

The release number is found in the first two bytes (four characters) of the identification number. For example, 0300 = 3.0, 0201 = 2.1.

If the backup file is compressed, you can read the header but you cannot read the data area following the header. Use *type* [*backup filename*] to read the header on a DOS system or *cat* [*backup filename*] to read the header on a UNIX System.

Note that the communication system release number, not the version number of SPM, reflects whether the backup file is compressed or uncompressed. Release 1.0 backups are uncompressed and Release 1.1 and later backups are compressed. Uncompressed files take longer to restore.

Considerations

Review the following items before you begin the backup procedure:

- The communications system does not have to be idle during backup; however, extension programming is blocked.
- Any objects that are in a maintenance-busy state are stored in that state. When you restore system programming, these objects are busied out, even if they have since been released from the maintenance-busy state.
- If you plan to store your backup file on a diskette, format a DOS diskette. (DOS formatting can be done on a UNIX System PC or a DOS PC).
- Uncompressed backup files are 100,000 to 210,000 bytes in size; compressed files are about 70,000 to 85,000 bytes.

- Maintenance data (error logs and other data used by qualified service technicians) is not saved in the backup file.

Follow the steps below to perform the backup procedure.

1 At the SPM Main Menu, press F2 to select Backup.

F2

```
    SPM Main Menu
Menu: Select Function
Sys Program   Maintenance
Backup        Restore
Boards        Pass-Thru
Print Opts    Password
Monitor       Language
```

2 Follow the instructions for a floppy or a hard disk.

A second window appears which displays the GOTO FLOPPY and MAKE NEW FILE options and a directory listing for the C:\spm\backup directory.

- If you are saving the backup file to a floppy disk, go to Step 3.
- If you are saving the backup file to the hard disk, go to Step 4.

3 Remove the SPM diskette and insert a formatted diskette. Use the arrow keys to highlight GOTO FLOPPY and press Enter↵.

```
Make a selection for
 the BACKUP file.
MAKE NEW FILE will
 create a new file
 on selected device.

Press ESC to abort.
```

```
GOTO FLOPPY
MAKE NEW FILE
backup.ams
file.1
file.2
```

After you press Enter↵, the GOTO FLOPPY statement shown above changes to GOTO HARD DISK and the directory listing for A:\ is displayed. Continue with Step 4.

The screen displays the default name for the backup file (backup.ams).

4 Specify a backup filename.

- To select the default filename use the arrow keys to highlight backup.ams and press Enter↵. Go to Step 6.
- To enter a different filename use the arrow keys to select MAKE NEW FILE and press Enter↵. Go to Step 5.

5 Type the new filename and press Enter↵.

```
   Press ESC to Abort.



Enter filename:

(default is backup.ams)
```

If you are working from the floppy drive, A:\ appears on the screen.

You can specify a drive letter with the filename but no path information.

6 Verify that the filename chosen does not already exist.

The following screen appears only if the filename chosen already exists. Continue with Step 7 if this screen does not appear.

```
The file already exists.
If you continue, the old
version will be deleted.
Press ESC to abort.
or "c" to continue.
```

Press Esc to abort the backup. Go to Step 1 to create a different backup file.

Press C to continue. Go to Step 7.

7 Observe the backup status screen.

```
Press ESC to Abort.
Est. Blocks: xxx - xxxx

  filename

BACKUP IN PROGRESS
Received Block xx
```

filename = the backup filename specified in Step 5

SPM indicates the status of the backup by displaying the number of the last block received (*xx*). Line 2 of the display screen shows the estimated number of blocks to be sent from the control unit (*xxx-xxxx*). This line is blank if you are backing up from Release 1.0.

If you abort the backup, the partial backup file is deleted to prevent restoration from a corrupted file and you see the screen shown in Step 8.

When the backup is complete, you see the screen shown in Step 9.

8 To abort the backup press Esc to return to the SPM Main Menu.

```
Press ESC to Abort.
Est. Blocks: xxx - xxxx

  filename

BACKUP IN PROGRESS
XMODEM ABORT - User
```

9 When the backup is complete, press Enter↵ to return to the SPM Main Menu.

```
Backup successful.
Please press Enter
to see the Main Menu



Received xxx Blocks
```

xxx = total number of blocks received

Boards

The Boards option allows qualified service personnel to add a board to the next available slot. The system must be idle to use this option. This option is not available from the system programming console.

The Boards option is also available in surrogate mode. In surrogate mode, you can assign trunk and extension modules (boards) to slots, even though the boards have not actually been installed. This type of board is referred to as a "phantom" or "null" board.

You cannot use the Boards option to change an actual board type. All boards assigned with the Boards option, including phantom boards, are cleared (unassigned) if you perform a board renumber (System→Board Renum).

NOTES:

1. You must assign phantom boards to higher slot numbers than any real boards you assign. If you assign a phantom board to a lower slot number than a real board, the control unit does not recognize the real board(s) that follow the phantom board.
2. If you remove a board but do not replace it, and then perform a board renumber, the control unit will not recognize any boards that follow the empty slot. You must reseat all of the boards to fill the empty slot before you perform the board renumber.

The Inspect function (PgDn) lets you see which modules have been assigned to slots on the control unit. Note that both phantom boards and real boards display if you use the Inspect function. To see only real board assignments, you must print the System Information report:
System→**More**→Print→SysSet-up.

Table 2–5 shows the type of boards that you can select.

Table 2–5. Board Types

Board Type	Description
400LSR	4 loop-start line jacks with 4 touch-tone receivers
400GLR	4 ground-start/loop-start line jacks with 4 touch-tone receivers
800LS	8 loop-start line jacks
800GLID	8 ground-start/loop-start line jacks with Caller ID capability available on the loop-start lines and 2 touch-tone receivers
800GLS	8 ground-start/loop-start line jacks
408LSA	4 loop-start line jacks and 8 ATL analog extension jacks
408GLA	4 ground-start/loop-start line jacks and 8 ATL analog extension jacks
408GLM	4 ground-start/loop-start line jacks and 8 MLX extension jacks (16 endpoints)
008ATL	8 analog extension jacks
008MLX	8 MLX-20L extension jacks (16 endpoints)
012TR/OPT	12 tip/ring extension jacks with 2 touch-tone receivers or 008 OPT jacks
016TR	16 tip/ring extension jacks with 4 touch-tone receivers
800DID	8 DID trunk jacks with 2 touch-tone receivers
400E&M	4 E&M tie trunk jacks
100D	1 DS1 jack (24 channels)
800BRI	8 BRI trunk jacks (16 channels)

Follow the steps below to assign modules.

1 At the SPM Main Menu, press F3 to select Boards.

F3

```
    SPM Main Menu
Menu: Select Function
Sys Program   Maintenance
Backup        Restore
Boards        Pass-Thru
Print Opts    Password
Monitor       Language
```

2 Press the function key that corresponds to the module you want to select.

```
        Boards:                 >
        Make a selection
F1      408LSA          800LS       F6
F2      012TR/OPT       008ATL      F7

F3      800DID          008MLX      F8
F4      800GLS          400GLR      F9
F5      Exit            400LSR      F10
```

```
        Boards:
        Make a selection
F1      400E&M          016TRR      F6
F2      408GLA                      F7
              800GLID
F3      100D            800BRI      F8
F4      408GLM
F5      Exit
```

If the module you want to assign is not shown on the first screen of the Boards menu, press PgUp to display the next menu screen.

3 Type the control unit slot number (01 through 17) in which the module is to be installed.

```
module name
Enter slot numbers
(01-17)

                    Delete
Backspace           Next
Exit                Enter
```

module name = option selected in Step 2

4 Assign or remove the module from the slot entered in Step 3.

```
module name
Enter slot numbers
(01-17)
nn
                    Delete      F8
Backspace           Next        F9
Exit                Enter       F10
```

module name = option selected in Step 2
nn = slot entered in Step 3

- To remove the module type from the specified slot number, press F8 (Delete). The Boards menu reappears.
- To assign the module type to the specified slot number and assign that same module type to another slot, press F9 (Next).
- To assign the module type to the specified slot number and assign a different module type to another slot, press F10 (Enter).
- To terminate the procedure and assign a different module, press F5 (Exit) and repeat Steps 2 through 4.
- To view types of modules assigned to all slots, press PgDn (Inspect).

5 Save your entry.

Select **Exit.** F5

The programming session terminates and the system restarts.

Browse

The Browse option allows you to browse through reports saved in the Reports directory (\spm\reports) on the hard disk of the PC or on a floppy.

1 At the SPM Main Menu press Ctrl + F8.

```
Please enter file name


Press ESC to Abort.
```

```
GOTO FLOPPY
FILENAME.XXX
FILENAME.YYY
```

FILENAME.XXX and *FILENAME.YYY* from the \spm\reports directory

2 Use the arrow keys to highlight the source (hard disk or floppy) from which you want to view the reports and press F10.

A list of the current reports appears.

3 Use the arrow keys to highlight the report you want to view and press F10.

The report appears.

- To view the next page of a report, press PgDn.
- To view the previous page of a report, press PgUp.
- To return to the beginning of a report, press Home.
- To exit from the Browse option and return to the SPM Main Menu, press Esc.

Convert

The Convert option (which can be used remotely) simplifies upgrading from an earlier release to a later release of the communications system. (See “Upgrading the Communications System.”) This procedure should be done only by qualified service personnel.

Convert uses two files: the existing backup file (the “convert from” file) and the converted file (the “convert to” file), which is created when you run the Convert option. The converted file contains system programming information in an uncompressed form. The “convert from” file is unchanged. Because uncompressed files take longer to process than compressed files, you may want to restore this uncompressed backup to the old control unit and then create a new backup. This new backup is in compressed form and does not have to be converted. For more information about compressed and uncompressed files see “Backup.”

To convert system programming to Release 4.0 format, Version 4.15 of SPM is required. This version can be easily identified by the version number, V4, in the upper left corner of the screen.

Help screens are available to guide you through the Convert procedure. See “SPM Help.”

Before you use the Convert option, you must complete the following tasks:

- If your PC has a hard disk, install the appropriate version of the SPM software. See “Upgrading the System.”
- Back up system programming. See “Backup.”
- Make sure you know the name of the backup file that you have created.

IMPORTANT:
Once the actual file conversion begins, you cannot stop the process; pressing Esc has no effect.

Follow the steps below to perform the conversion.

1 At the SPM Main Menu, press Alt + U to begin the conversion.

```
    SPM Main Menu
Menu: Select Function
Sys Program   Maintenance
Backup        Restore
Boards        Pass-Thru
Print Opts    Password
Monitor       Language
```

2 Follow the instructions for a floppy or a hard disk.

A second window appears which displays the GOTO FLOPPY option and a directory listing for the C:\spm\backup directory.

- If the backup file is stored on a floppy disk, go to Step 3.
- If the backup file is stored on a hard disk, go to Step 4.

3 Use the arrow keys to highlight GOTO FLOPPY and press Enter↵.

```
Please select file name
    to convert from,
    then press Enter


   Press ESC to abort.
```

```
GOTO FLOPPY
FILENAME.XXX
FILENAME.YYY
```

FILENAME.XXX and *FILENAME.YYY* from the \spm\backup directory

After you press Enter↵, the GOTO FLOPPY statement shown above changes to GOTO HARD DISK and a directory listing from the root directory of the floppy disk appears. Go to Step 4.

```
Please select file name
    to convert from,
    then press Enter


   Press ESC to abort.
```

```
GOTO HARD DISK
FILENAME.XXX
FILENAME.YYY
```

FILENAME.XXX and *FILENAME.YYY* from the root directory of the disk in Drive A.

4 Use the arrow keys to highlight the name of the backup file to be converted and press Enter↵.

- If the backup file you select is a 4.0 backup, it can not be converted and the following message appears:

  File has already been converted.
  Press Enter to continue.

  Press Enter↵ to select another filename, or press Esc to abort the convert procedure.

- If the backup file you select can be converted, go to Step 6.

5 Observe the updated file selection screen and press Enter↵.

```
Please select file name
    to convert from,
    then press Enter

N: FILENAME.XXX
   Press ESC to abort.
```

FILENAME.XXX = the backup filename selected in Step 4

N = drive

6 If converting from Release 1.0 or 1.1, select the CONVERT TO release. To convert from Release 1.2, 2.0, or 2.1 go to Step 7.

The screen below appears when converting from Release 1.0 or 1.1.

```
Please enter your
CONVERT TO release
and press ENTER.
1.2i          1.4i
2.0           2.1
3.0         4.0/5.0
Enter number: x.x
```

All characters must be entered as they appear on the screen, including the decimal point.

7 Follow the instructions for a floppy or a hard disk.

- If the CONVERT TO file will be saved to a floppy disk, go to Step 8.
- If the CONVERT TO file will be saved to the hard disk, go to Step 9.

8 Use the arrow keys to highlight GOTO FLOPPY and press Enter↵.

```
Please select file name
to convert to, or select
NEW FILE to create a new
 file on selected drive.
    Enter Filename:
```

```
GOTO FLOPPY
MAKE NEW FILE
FILENAME.XXX
FILENAME.YYY
```

After you press Enter↵, the GOTO FLOPPY statement shown above changes to GOTO HARD DISK and the directory listing from the root directory of the disk in Drive A appears. Continue with Step 9.

```
Please select file name
to convert to, or select
NEW FILE to create a new
 file on selected drive.
    Enter Filename:

   Press ESC to abort.
```

```
GOTO HARD DISK
MAKE NEW FILE
FILENAME.XXX
FILENAME.YYY
```

9 Specify a filename for the converted file.

- Highlight the name of the file you want to convert to, press Enter↵ and go to Step 11.
- To enter a different filename, use the arrow keys to select MAKE NEW FILE and press Enter↵.

10 Enter the new filename and press Enter↵.

```
Please select file name
to convert to, or select
NEW FILE to create a new
 file on selected drive.
     Enter Filename:
A:\filename.new
(default is RESTORE.NEW )
```

The converted file cannot have the same name as the file you converted from. If you specify the same filename, the following screen appears:

```
 The file selected to
convert to is the same
as the file selected to
convert from.  Please
choose a different file.

Press Enter to continue
```

Press Enter↵ and repeat this step.

11 Check the updated file screen and press Enter↵.

```
Please select file name
to convert to, or select
NEW FILE to create a new
 file on selected drive.
     Enter Filename:
N:  FILENAME.NEW
(default is RESTORE.NEW)
```

FILENAME.NEW = name entered in Step 10
N = drive

12 Observe the conversion progress screen.

```
CONVERSION IN PROGRESS

    Converting From:
N:  FILENAME.XXX
    Converting To:
N:  FILENAME.NEW
```

FILENAME.XXX = name entered at Step 4
FILENAME.NEW = name entered at Step 10
N = drive

When the conversion completes, the screen shown in Step 13 appears.

13 Press any key to return to the SPM Main Menu.

```
Conversion successful.
Please press any key
    to continue.
```

Language

A language attribute in the SPM configuration file \spm\ams.cfg (DOS version) or /usr/ams/ams.cfg (UNIX System version) specifies whether SPM menus, pop-up windows, and other messages are presented in English, French, or Spanish. A second language selection option affects messages from the control unit to SPM and controls the display on the console simulation window for the duration of the session. These two language options operate independently of each other.

The following discussion refers to the language specified in the SPM configuration file as the *PC language* and the language used by the control unit as the *console window language*.

PC Language

During SPM installation, you select a language that is recorded in the SPM configuration file. Any time thereafter, SPM can be started with the *-l* option to specify a different language, using one of the following command lines:

- *spm -l english*
- *spm -l french*
- *spm -l spanish*

Note that the option is a lowercase letter L and not the number 1.

Use of the `-l` option changes the language attribute in the ams.cfg file. The language specified becomes the new PC language, used whenever SPM is started without the `-l` option.

Console Window Language

By default, the language used in the console simulation window is the language specified in the ams.cfg file; however, you can select a different language for this window for the duration of the current session. To select a different language, follow the steps below.

1 At the SPM Main Menu press F10 to select Language.

```
     SPM Main Menu
Menu: Select Function
Sys Program   Maintenance
Backup        Restore
Boards        Pass-Thru
Print Opts    Password
Monitor       Language
```

F10

2 Press the function key that corresponds to your language selection.

```
Display Language
Make a Selection:
English
French
Spanish

Exit
```

F1 English
F2 French
F3 Spanish

The Display Language screen reappears, with the language you selected.

3 Press F5 to return to the SPM Main Menu or select another language.

Maintenance

CAUTION:
This option is for use by qualified technicians only. Maintenance procedures are provided in the documentation for qualified technicians. See "Related Documents."

Monitor

CAUTION:
This is a password-protected option and is for use by your technical support organization only.

Pass-Thru

The Pass-Thru option allows qualified service personnel to administer IS II/III applications on a remote PC. It permits you to establish a remote connection with the control unit to which the IS II/III PC is directly connected. Figure 2–7 illustrates the relationship of the SPM PC, the communications system control unit, and the IS II/III PC.

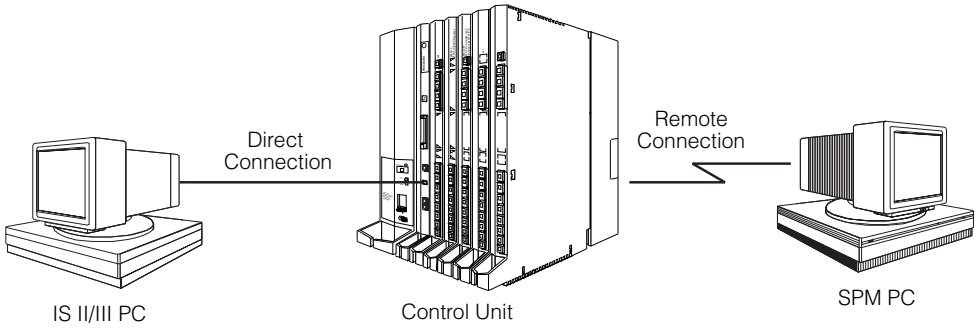

Figure 2–7. Pass-Thru

A Pass-Thru request must be initiated at a DOS PC. It is not available from a UNIX System PC; that is, Pass-Thru cannot be established between two IS II/III PCs. The local admin PC must be in an idle state.

A Pass-Thru request to a locally connected IS II/III system causes the modem to fall back to 1200 bps if the speed is set to 2400 bps and the modem call to the control unit is at 1200 bps. If necessary, the communication system will adjust its speed to that of the local SPM PC.

Once the Pass-Thru connection is established, you can program in any of the following IS II/III applications from your SPM PC:

- AUDIX Voice Power™
- Call Accounting System
- Fax Attendant System® (IS III only)
- CONVERSANT Intro® (IS III only)

NOTE:
You cannot program the SPM application on the IS II/III PC because the remote call (from your SPM PC) uses the IS II/III PC's COM1 port; therefore, the system programming jack cannot be used for system programming. For the same reason, a user at the IS II/III PC end of the connection cannot use SPM while your Pass-Thru is in effect. If use of SPM is attempted, the user at the IS II/III end sees the following message:

```
PRE-EMPT IN PROGRESS
Please try again.
```

To initiate Pass-Thru, establish a modem connection between the SPM PC and the control unit.

If the IS II/III PC does not respond to the Pass-Thru request from the control unit (for example, because the PC is turned off), you see the following message:

```
Pass-thru failed.
Please try again.
```

If the connection between the control unit and the IS II/III PC fails, the connection between the control unit and the SPM PC is dropped. You see the following message:

```
Pass-through Session
unexpectedly terminated.
Please press Enter
to continue.
```

When you press [Enter←] you return to the SPM Main Menu.

Follow the steps below to initiate the Pass-Thru.

1 At the SPM Main Menu press [F8] to select Pass-Thru.

```
    SPM Main Menu
Menu: Select Function
Sys Program   Maintenance
Backup        Restore
Boards        Pass-Thru
Print Opts    Password
Monitor       Language
```

[F8]

The display area changes to 24-lines by 80-characters, which is much larger than the display area on the console simulation window (7-lines by 24-characters).

2 Type your login name and press Enter↵.

```
Welcome to
IS-II/III

login:
```

3 Type the IS II/III password and press Enter↵.

```
Password:
```

4 Type *ams* for the terminal emulation type and press Enter↵.

```
Unix disk usage
information

Term=
```

- If you are working with IS II, the IS II main menu appears.
- If you are working with IS III, the system prompts you for your login registration. After you enter your login and press Enter↵, the IS III main menu appears.

5 To exit from IS II/III programming, press F5 (Exit).

The system prompts you for confirmation that you want to exit. After confirmation the following message appears.

```
Returning to SPM
```

Password

The Password option is used by qualified service personnel to change the modem connection password. A password is always required to establish a connection with the built-in modem. The password always consists of seven characters. You can perform remote system programming only if you enter the password correctly. A default password is set at the factory. You must obtain this password from your system consultant (SC).

Follow the steps below to change the modem connection password.

1 At the SPM Main Menu, press F9 to select Password.

```
    SPM Main Menu
Menu: Select Function
Sys Program   Maintenance
Backup        Restore
Boards        Pass-Thru
Print Opts    Password      F9
Monitor       Language
```

2 Type the old (current) password. Do not press Enter↵.

```
Password:
Enter Old Password
```

If you type the old password incorrectly, the bottom of the screen displays the message `Not Equal`. Repeat Step 2. If you fail to enter the password correctly after three attempts, the bottom of the screen displays the message `Old Password in Use` and the procedure terminates. Press Enter↵ to return to the SPM Main Menu.

3 Type the new password (any five characters). Do not press Enter↵.

```
Password
Enter New Password
```

The password does not appear on the screen as you type it.

Security Alert:

- *Always use the longest length password allowed on the system.*
- *Passwords should consist of a random, non-repetitive, hard-to-guess sequence of digits.*

4 Type the new password again. Do not press Enter↵.

```
Password
Enter New Password again



New Password in use
```

5 Press F5 to return to the SPM Main Menu.

Print Options

The Print Opts option allows qualified service personnel to direct the output of system programming reports either to the PC (where you can save them, browse through them, or print them with the system programming Print option) or to the SMDR printer.

Follow the procedure below to direct the output of the system programming reports.

1 At the SPM Main Menu press F4 to select Print Opts.

```
     SPM Main Menu
Menu: Select Function
Sys Program   Maintenance
Backup        Restore
Boards        Pass-Thru
Print Opts    Password
Monitor       Language
```

F4

2 Select the target device for the reports.

```
Printer Options
Make a selection
SMDR Port
PC Port


Exit
```

F1
F2

3 Press F5 to return to the SPM Main Menu.

SMDR Port Output

See “Printing System Reports” in Chapter 3 for more information about the print procedure using the system console and the SMDR port.

PC Port Output

See “Printing Reports” for more information about the print procedure using SPM and the PC port.

Restore

The Restore option allows qualified service personnel to load system programming from a diskette or from the hard disk into the processor module memory.

This procedure is used to program a new system if a disk was created through surrogate mode programming, or to restore information (using a backup disk) lost through system failure. It is also part of the upgrade procedure.

Considerations

Review the following items before you begin the restore procedure.

- The system will be forced idle during a restore procedure.
- You must have a backup file containing system programming before you use this procedure. See “Backup.”
- Features that were not programmed when the backup file was created are reset to factory defaults.
- The data restored reflects the number of extensions and lines available on the system at the time the backup was created. The remaining extensions and lines will be set to the default values that are initialized during a Restart (cold start).
- Restore is terminated under the following conditions:
  - If fewer boards are listed on the disk than on the control unit.
  - If any real board is out of sequence with the boards listed on the disk.
  - If phantom boards are not listed last.
  - If the operating mode of the system being restored is Hybrid/PBX, but the control unit processor module has been modified to operate only in Key mode.
- A successful restore is followed automatically by a Restart (cold start).

WARNING:
An unsuccessful or terminated restore results in a System Erase (frigid start). All calls are dropped. The system configuration is erased. All system programming is lost, and the system returns to the factory settings. If the restore is being done remotely, the connection is dropped immediately. If this happens, attempt to reconnect to the control unit and immediately perform another restore. If this is not successful, programming must be restored on site.

Follow the steps below to perform a restore.

1 At the SPM Main Menu, press F7 to select Restore.

```
    SPM Main Menu
Menu: Select Function
Sys Program   Maintenance
Backup        Restore
Boards        Pass-Thru
Print Opts    Password
Monitor       Language
```

F7

2 Follow the instructions for a floppy or a hard disk.

A second window appears which displays the GOTO FLOPPY option and a directory listing for C:\spm\backup.

- If you are performing a Restore with a file saved on a floppy disk, go to Step 3.
- If you are performing a Restore with a file saved on the hard disk, go to Step 4.

3 Use the arrow keys to highlight GOTO FLOPPY and press Enter↵.

```
Make a selection for
the RESTORE file.

If upgrading, convert
files before restoring.

Press ESC to Abort.
```

```
GOTO FLOPPY
backup.ams
file.1
file.2
```

After you press Enter↵, the GOTO FLOPPY statement shown above changes to GOTO HARD DISK. Go to Step 5.

4 Specify the filename to restore from.

- To select the default backup filename, use the arrow keys to highlight backup.ams and press Enter↵.
- If you used a different backup filename, use the arrow keys to select one of the other filenames and press Enter↵.

  If the file you select is not in the same format as the communications system, the screen below appears. Press Enter↵ to return to the SPM Main Menu. See “Convert” for details about converting a backup file.

```
File must be converted
before restoring.

Please press Enter
to see the main menu:
```

5 Observe the restore progress screen.

```
Press CTRL-F5 to Abort
Est. total time: xx min

filename
RESTORE IN PROGRESS
Blocks Sent   Remaining
    xxxx         xxxx
```

xx = approximate number of minutes
filename = name entered in Step 5
xxxx = number of blocks

To abort the restore press [Ctrl]+[F5]. You return to the SPM Main Menu.

6 When the restore completes, press [Enter↵] to return to the SPM Main Menu.

```
Restore successful.
Please press Enter
to see the Main Menu



Sent xxxx Blocks
```

xxxx = number of blocks sent

System Programming

A primary function of SPM is to provide a method for programming the communications system. The Sys Program option gives you access to all of the system programming features available from the system programming console.

Basic Programming Information

To begin programming, you must perform one of the following to display the System Programming menu on the console or PC:

On the console: **Menu**→Sys Program →Exit
On the PC: Type *spm*→[Enter↵]→Press any key→[F1]→[F5]

In most cases, you can press Exit or [F5] to exit from a screen without making any changes. Exceptions to this are noted as part of a procedure. When you complete a procedure and press Exit ([F5]), you usually move up one screen in the menu hierarchy. Occasionally, when you press Exit ([F5]), you return to the previous screen. *In a few cases*, pressing Exit brings you back to the System Programming menu where you can select another option to program or exit from system programming.

To complete a procedure and save the information you have programmed, press Enter ([F10]).

If you are programming a group of sequentially numbered extensions or trunks, you may have the option of pressing Next (F8). This saves your entry and automatically provides the number of the next extension or trunk in the sequence, thus saving you a couple of steps. If Next displays on the screen, you can use it with the current option.

In most cases, you will be at an intermediate step in the procedure you have just completed. At that point, you can select one of the options shown on the screen and continue programming, or you can press Exit (F5) again. This usually takes you back to the System Programming menu. If not, you again can continue programming on the current screen or press Exit (F5) again.

Idle States

A few of the programming procedures can be started only when the entire system or some part of it, such as a trunk or an extension, is idle (not in use). Some procedures require that the trunk or extension be idle only at the instant of programming. Other procedures, which take longer, require the system, trunk, or extension to be forced into remaining idle until programming is completed. These procedures wait for the system, trunk, or extension to become idle and then prevent the initiation of any new calls. This condition is called *forced idle*.

NOTE:
If a procedure requires an idle condition, perform the programming outside of normal business hours.

If a procedure requires that the system be in an idle state and the system is busy when you begin, you see the screen shown below.

```
System Busy   Pls Wait

Dial Code:    nnnn
Slot/Port:    ss/pp



Exit
```

The screen changes to the appropriate programming screen when the system is no longer busy.

System Forced Idle

When the entire system is forced idle, no calls can be made or received. The procedures listed below can be performed only when the entire system (every line and every extension) is idle:

- Select system mode.
- Identify system operator positions.
- Renumber boards.
- Renumber system.
- Identify telephones with voice signal pairs for the Voice Announce to Busy feature.
- Identify telephones that need the Simultaneous Voice and Data feature.
- Restore system programming information.
- Identify the Music On Hold jack.

When the system is forced idle, the following occurs: multiline telephone users hear a reminder tone that indicates the telephone cannot be used; display telephone users see the message `Wait: System Busy`; single-line telephone users do not hear a dial tone.

Line or Trunk Idle

Since these procedures require the line or trunk to be idle *only at the instant of programming*, the line or trunk is not forced idle. The following procedures can be performed only when the line or trunk being programmed is idle:

- Identify loudspeaker paging line jack.
- Assign trunks to pools.
- Specify incoming or outgoing DID- or tie-trunk type.
- Specify tie-trunk direction.
- Specify tie-trunk E&M signal.

Extension Forced Idle

When an extension or data terminal is forced idle, no calls can be made or received on that extension or data terminal. The following procedures can be performed only when the extension or data terminal being programmed is idle:

- Assign call restrictions.
- Assign pool dial-out restrictions.
- Copy extension assignments.
- Assign lines, trunks, or pools to extensions.

- Assign labels to a personal directory.
- Use centralized telephone programming.

When the extension is forced idle, the following occurs: multiline telephone users hear a reminder tone that indicates the telephone cannot be used; display telephone users see the message `Wait: System Busy`; single-line telephone users do not hear a dial tone.

Forced Idle Reminder Tone

The forced idle reminder tone is a high-low “door-phone” tone—400 ms of 667 Hz tone followed by 400 ms of 571 Hz tone. The tone is provided under the following circumstances:

- At the extension, to remind the user that the system or the extension is in the forced idle state
- At the programming console or at a PC running SPM, to remind the system manager that the system (or at least one extension) is in the forced idle state because of administrative activity

In Release 1.1 and higher of the communications system, forced idle reminder tones occur every 20 seconds. You can adjust the volume of these tones with the volume control on the system console.

Accessing System Programming

Follow the steps below to access system programming.

1 At the SPM Main Menu press [F1] to select `Sys Program`.

[F1]

```
    SPM Main Menu
Menu: Select Function
Sys Program   Maintenance
Backup        Restore
Boards        Pass-Thru
Print Opts    Password
Monitor       Language
```

2 Press the function key next to the option you want.

```
System Programming:     >
Make a selection
System          Extensions
SysRenumber     Options
Operator        Tables
LinesTrunks     AuxEquip
Exit            NightSrvce
```

```
System Programming:
Make a selection
Labeling        Language
Data
Print
Cntr-Prg
Exit
```

If the option you want does not appear on the first screen of the System Programming menu, press PgUp to display the second screen of the menu.

Printing Reports

Use the following procedure to print system reports using SPM at the PC. The SPM Print Opts must be set to PC Port. See “Print Options” for details about setting the printer output port.

1 At the second page of the System Programming menu, press F3 to select Print.

```
System Programming:     >
Make a selection
Labeling
Data
Print
Cntr-Prg
Exit
```

3 Press the function key that corresponds to the report to be printed.

```
Print (English    ):        >
Make a selection
All             Trunk Info
SysSet-up       T1 Info
Dial Plan       Pri Info
Labels          RmoteAccess
Exit            Oper Info
```

3 Use one of the methods shown after this procedure to print the report(s).

```
Please enter file name
     to store print
(default is print.ams)


Press Esc to Abort.
```

```
LPT1:
GOTO FLOPPY
MAKE NEW FILE
PRINT.AMS
```

4 Observe the print status screen.

```
Print in Progress ...

F5  Exit
```

You can press F5 to interrupt printing and return to the SPM Main Menu.

Print Hard Copy

- To print a hard copy of the report, use the arrow keys to highlight `LPT1:` and press Enter↵.

Print to Hard Disk

- To print the reports to the hard disk if the print file does not exist, use the arrow keys to highlight `MAKE NEW FILE` and press Enter↵.
  - To save to the default print filename (`print.ams`), press Enter↵.
  - To save to the filename of your choice, type [*filename*] and press Enter↵.
- To print the reports to the hard disk if the print file already exists, use the arrow keys to highlight the [*filename*] and press Enter↵.

Print to Floppy Disk

Use the arrow keys to highlight `GOTO FLOPPY:` and press Enter↵. Use one of the methods shown below.

- To print the reports to a floppy disk if the print file does not exist, use the arrow keys to highlight `MAKE NEW FILE` and press Enter↵.
  - To save to the default print filename (`print.ams`), press Enter↵.
  - To save to the filename of your choice, type [*filename*] and press Enter↵.
- To print the reports to a floppy disk if the print file already exists, use the arrow keys to highlight the [*filename*] and press Enter↵.

Upgrading the System

WARNING:
The following procedures are to be used by qualified technicians or service personnel only. Installation or maintenance of this product by anyone other than qualified personnel may damage or impair the product; your limited warranty does not cover such damage. For details, see your limited warranty in the Customer Support Information in the back of this book. Hazardous electrical voltages are present inside this product.

This section describes upgrading your communications system to Release 4.0. You can use this procedure to perform the following upgrades:

- From Release 1.0 to Release 4.0
- From Release 1.1 to Release 4.0
- From Release 2.0 to Release 4.0
- From Release 2.1 to Release 4.0
- From Release 3.0 to Release 4.0
- From Release 3.1 to Release 4.0

NOTE:
You must have a version later than SPM 4.15 to upgrade from Release 3.1 to Release 4.0.

MERLIN® II Communications System programming cannot be upgraded to this communications system. The new communications system must be completely reprogrammed.

Before You Begin

Before you begin the upgrade to Release 4.0, you will need the items listed below.

- SPM Version 4.15 or later to back up and convert system programming information and to restore system programming information after the Release 4.0 processor module has been installed.
- One or both of the following:
  - Release 4.0 processor module (when converting from Release 2.1 or earlier.)
  - A forced installation PCMCIA memory card with Release 4.0 system software (when converting from any release).
- DOS-formatted diskette

NOTE:
If SPM is already installed, the `Welcome to SPM` screen that appears when you start SPM identifies the version on both the last line of the console simulation window and in the upper left corner of the screen. If you are working with Version 4.15, `V4` appears in the upper left-hand corner of the screen and `Version 4.15` appears on the last line of the console simulation window.

Inter-Release Compatibility

It is important to understand compatibility between files created on each of the different versions of SPM, not only for upgrading but also for programming.

Table 2-6 summarizes programming compatibility. (It is assumed that the majority of the programming is done in surrogate mode and backed up on disk).

Table 2–6. Programming Compatibility

SPM Version	Program Backup on	Restore on				
		1.0	1.1	2.0/2.1	3.0	4.0
1.13	1.0	yes	no	no	no	no
1.16	1.0	yes	yes	no	no	no
2.09	1.0	yes	yes	yes*	no	no
2.16	1.0	yes	yes	yes*	no	no
3.18	1.0	yes	yes	yes*	yes*	no
4.15	1.0	yes	yes	yes*	yes*	yes*
1.16	1.1	no	yes	no	no	no
2.09	1.1	no	yes	yes*	no	no
2.16	1.1	no	yes	yes*	no	no
3.18	1.1	no	yes	yes*	yes*	no
4.15	1.1	no	yes	yes*	yes*	yes*
2.09	2.0	no	no	yes	no	no
2.16	2.0	no	no	yes	no	no
3.18	2.0	no	no	yes	yes*	no
4.15	2.0	no	no	yes	yes*	yes*
2.16	2.1	no	no	no	no	no
3.18	2.1	no	no	no	yes*	no
4.15	2.1	no	no	no	yes*	yes*
3.18	3.0	no	no	no	yes	no
4.15	3.0	no	no	no	yes	yes*
4.15	4.0	no	no	no	no	yes

* The backup file must be converted before it is restored.

NOTE:
The default barrier code and any programmed barrier codes from Release 2.1 and earlier will be carried over to Release 3.0 and later with no change and the barrier code length will be four (4). It is the responsibility of the system manager to change the barrier code length and the barrier codes if so desired.

Upgrade Procedure

IMPORTANT:
The system upgrade procedure must follow the order of the steps shown below.

1 Install SPM.

To upgrade the system to Release 4.0, you will need to install (or upgrade to) Version 4.15 of SPM. See “Installing the SPM Software.”

2 Back up your system programming.

This step creates a file containing system programming information. See “Backup.”

3 Turn off AC power switches on the control unit in the following order:

(1) Basic carrier
(2) Expansion carrier 1, if present
(3) Expansion carrier 2, if present.

4 Replace the processor module (when upgrading from Release 2.1 and earlier).

a. Unplug the interface cords from the SPM and SMDR printer ports on the processor module.
b. Remove the processor module from Slot 0.
c. Install the Release 4.0 processor module in Slot 0.
d. Plug the interface cords into the SPM and SMDR printer ports on the processor module.

5 Insert the forced installation memory card into the PCMCIA interface slot on the processor module.

6 Turn on the AC power switches on the control unit in the following order:

(1) Expansion carrier 2, if present
(2) Expansion carrier 1, if present
(3) Basic carrier.

7 Convert your backup file to Release 4.0 format.

This procedure converts the backup file created in Step 2. See “Convert.”

8 Restore your system programming.

The system is forced idle and cannot be used during this procedure. See “Restore.”

9 Program new features.

If you wish to use the factory defaults for the new features available with Release 4.0, skip this step.

NOTE:
After upgrading to Release 3.0 or 4.0 from Release 1.0, 1.1, 2.0, or 2.1 some programming will be lost. You must reprogram the following:

- Authorization Codes
  `Extensions→`**More**`→AuthCode`
- SMDR Account Code Format
  `Options→SMDR→AuthCode`
- Inter-digit Timers
  `Options→`**More**`→Interdigit`

See Tables 2–7, 2–8, 2–9, 2–10, and 2–11 which follow this procedure.

- **Table 2–7.** Lists the features added with Release 1.1 of the communications system.
- **Table 2–8.** Lists the features added with Release 2.0 or 2.1 of the communications system.
- **Table 2–9.** Lists the features added with Release 3.0 of the communications system.
  - When you upgrade from Release 2.0 or 2.1 to Release 3.0, you must program these features as the last step of the upgrade procedure.
  - When you upgrade from Release 1.1 to Release 3.0, you must program the features listed in Table 2–8, then the features listed in Table 2–9.
  - When you upgrade from Release 1.0 to Release 3.0, you must first program the features listed in Table 2–7, then the features listed in Table 2–8, then the features listed in Table 2–9.
- **Table 2–10.** Lists the features added with Release 3.1 of the communications system.
  - When you upgrade from Release 3.0 to Release 3.1, you must program these features as the last step of the upgrade procedure.
  - When you upgrade from Release 2.0 or 2.1 to Release 3.1, you must program the features listed in Table 2–9, then the features listed in Table 2–10.

— When you upgrade from Release 1.1 to Release 3.1, you must program the features listed in Table 2–8, then the features listed in Table 2–9, then the features listed in Table 2–10.

— When you upgrade from Release 1.0 to Release 3.1, you must first program the features listed in Table 2–7, then the features listed in Table 2–8, then the features listed in Table 2–9, then the features listed in Table 2–10.

- **Table 2–11.** Lists the features added with Release 4.0 of the communications system.

  — When you upgrade from Release 3.1 to Release 4.0, you must program these features as the last step of the upgrade procedure.

  — When you upgrade from Release 3.0 to Release 4.0, you must program the features listed in Table 2–10, then the features listed in Table 2–11.

  — When you upgrade from Release 2.0 or 2.1 to Release 4.0, you must program the features listed in Table 2–9, then the features listed in Table 2–10, then the features listed in Table 2–11.

  — When you upgrade from Release 1.1 to Release 4.0, you must program the features listed in Table 2–8, then the features listed in Table 2–9, then the features listed in Table 2–10, then the features listed in Table 2–11.

  — When you upgrade from Release 1.0 to Release 4.0, you must first program the features listed in Table 2–7, then the features listed in Table 2–8, then the features listed in Table 2–9, then the features listed in Table 2–10, then the features listed in Table 2–11.

Table 2–7. Programming Needed after Upgrade to Release 1.1

Feature	Sequence
System language	SysProgram→**More**→Language→SystemLang
Extension language	SysProgram→**More**→Language→Extensions
SMDR language	SysProgram→**More**→Language→SMDR
Printer language	SysProgram→**More**→Language→Printer

Table 2–8. Programming Needed after Upgrade to Release 2.0

Feature	Sequence
Primary Rate Interface (PRI)	SysProgram→LinesTrunks→LS/GS/DS1→Type→PRI SysProgram→LinesTrunks→LS /GS/DS1→FrameFormat SysProgram→LinesTrunks→LS/GS/DS1→Suppression SysProgram→LinesTrunks→PRI→PhoneNumber SysProgram→LinesTrunks→PRI→B-ChannlGrp SysProgram→LinesTrunks→PRI→NumbrToSend SysProgram→LinesTrunks→PRI→Test TelNum SysProgram→LinesTrunks→PRI→Protocol SysProgram→LinesTrunks→PRI→DialPlanRtg SysProgram→LinesTrunks→PRI→OutgoingTbl SysProgram→Tables→ARS
DID Emulation on T1	SysProgram→LinesTrunks→LS/GS/DS1→Type→**More**→DID/All DID
Night Service Calling Group	SysProgram→NightSrvce→GroupAssign→Calling Group
Coverage VMS Off	SysProgram→**More**→Cntr-Prg→Program Ext
Data Status	SysProgram→**More**→Cntr-Prg→Program Ext
Extension Copy	SysProgram→**More**→Cntr-Prg→Copy Ext
Posted Message button on analog multiline and MLX-10 non-display telephones (for use with Do Not Disturb)	SysProgram→**More**→Cntr-Prg→Program Ext

Table 2–9. Programming Needed after Upgrade to Release 3.0

Feature	Sequence
Automatic Backup	SysProgram→System→Back/Restore→Auto Backup
Incoming Call Line Identification Delay	LinesTrunks→**More**→LS-ID Delay→**Drop**→Dial trunk no.→Enter
Remote Access Barrier Codes	LinesTrunks→RemoteAccss→BarrierCode→Code Info →Code Length LinesTrunks→RemoteAccss→BarrierCode→Code Info →Code Entry
Authorization Codes	Extensions→**More**→Auth Code

Table 2–10. Programming Needed after Upgrade to Release 3.1

Feature	Sequence
Trunk-to-Trunk Transfer	Extensions→**More**→**More**→TrkTransfer→Toggle LED On/Off or Dial ext. no.→Enter→Exit→Exit
Second Dial Tone Timer	Options→**More**→SecDT→dial second dial tone timer value→Enter

Table 2–11. Programming Needed after Upgrade to Release 4.0

Feature	Sequence
Delayed Call Forwarding	Extensions→**More**→Delay Frwd→Dial ext. no.→Enter →Dial no. of delay rings→Enter
Group Calling Overflow and Thresholds	Extensions→**More**→Grp Calling→Overflow→Dial calling group ext. no.→Enter→Dial ext. no.→Enter→ Number Based Overflow→**Drop**→Dial no. of calls→ Enter→Time Based Overflow→**Drop**→Dial no. of seconds→Enter
Voice Announce on a QCC	Operator→Queued Call→**More**→Voice Annc→Enabled or Disabled→Enter
2B Data	Data→2B Data→Dial adjunct ext. no.→Enter

Continued on next page

Table 2–11, Continued

Basic Rate Interface (BRI)	LinesTrunks→**More**→BRI→SPID/DN.→Dial line/trunk no. →Enter→**Drop**→Dial SPID→Enter→**Drop**→Dial DN→ Enter LinesTrunks→**More**→BRI→Timers→Select timer→**Drop** →Dial no. of seconds or ms→Enter
Clock Synchronization	LinesTrunks→**More**→ClockSync→Primary→**Drop**→Dial slot no.→Enter→Dial port no. **OR** Select source of synchronization→Enter→Secondary→Dial slot no.→ Enter→Dial port no. **OR** Select source of synchronization →Enter→Tertiary→dial slot no.→Enter→Dial port no. **OR** Select source of synchronization→Enter
Ringing Frequency (016 module)	Options→**More**→Ringing Freq→dial slot no.→Select 20Hz or 25Hz→Enter
Board Renumber (When an 012 module is replaced by an 016 module)	System→Board Renum→Yes
Switched 56 Data	To select T1- All Tie, Switched 56 Data: LinesTrunks→LS/GS/DSl→Dial slot no.→Enter→Type→ Tl→Enter→All TIE→Enter→S56→Enter→Dial channel no.→Enter→Exit→Exit→Exit→Exit LinesTrunks→LS/GS/DSl→Dial slot no.→Enter→Type→ Tl→Enter→TIE→Enter→S56→Enter→Dial channel no. →Enter→Exit→Exit→Exit→Exit To select T1: All Switched 56 Data: LinesTrunks→LS/GS/DSl→Dial slot no.→Enter→Type→ Tl→Enter→**More**→ALL S56 Data→Enter→Select Direction, Intype, Outtype, AnsSupv, Disconnect, Inmode, or Outmode→Program options→Enter→Exit→Exit→ Exit→Exit To select T1: Switched 56 Data: LinesTrunks→LS/GS/DSl→Dial slot no.→Enter→Type→ Tl→Enter→**More**→S56 Data→Enter→Dial channel no. →Enter→Select Direction, Intype, Outtype, AnsSupv, Disconnect, Inmode, or Outmode→Program options→ Enter→Exit→Exit→Exit→Exit

Continued on next page

Table 2–11, Continued

Switched 56 Data Network Dial Plan Routing	To specify Expected Digits:
	`LinesTrunks`→**MORE**→T1 Data NW→`S56 Dial Plan Routing`→`Expected Digits`→**Drop**→Dial expected digits →`Enter`→`Exit`→`Exit`→`Exit`
	
	To specify Delete Digits:
	`LinesTrunks`→**MORE**→T1 Data NW→`S56 Dial Plan Routing`→`Delete Digits`→**Drop**→Dial delete digits→ `Enter`→`Exit`→`Exit`→`Exit`
	
	To specify Add Digits:
	`LinesTrunks`→**MORE**→T1 Data NW→`S56 Dial Plan Routing`→`Add Digits`→**Drop**→Dial add digits→`Enter`→ `Exit`→`Exit`→`Exit`

Surrogate Mode Programming

Surrogate mode allows qualified service personnel to perform system programming at an off-site service location. The actual communications system hardware does not have to be installed—the programmer needs only a direct connection from the PC to the processor module. By following a customer's set of completed planning forms, the system can be programmed as if the appropriate modules, trunks, and telephones have been installed. When system programming is completed, a system backup is performed to save the information on disk. This backup disk is then taken to the new installation site and used with the Restore option to provide complete system programming for a new communications system.

You do not "select" surrogate mode programming—you enter it automatically under the following conditions:

- The PC is connected to the lower RS-232 port on a control unit (direct local connection).
- Only the processor and power modules are connected.

Once you enter surrogate mode programming, you must follow the sequence of procedures shown below.

- At the service location, perform the following:
  1. System Erase
  2. Program the Boards
  3. System Programming
  4. Backup
- At the installation site, perform a Restore.

While you are in surrogate mode, the Pass-Thru and Password options are not available.

NOTE:
Surrogate mode is available only through the local programming port. You cannot access surrogate features through the system programming console.

Common Administrative Procedures

3

Introduction

This chapter contains procedures for all of the common administrative tasks performed by the system manager in response to changes in business requirements. The procedures described in this chapter are defined briefly below:

- Change Basic System Operating Conditions

  These procedures apply to the system rather than to the operation of telephones, lines/trunks and operator positions. The procedures covered are:

  — Reassign the extension jack used for system programming.

  — Change the system language.

  — Set the system date and time.

- Renumber extensions

  Use this procedure to assign a new extension number to a telephone, accessory, line/trunk, pool (Hybrid/PBX only) or group. The extension number to be assigned must currently be unassigned.

- Add or change operator positions

  Add or delete a system operator position for either the Queued Call Console (QCC) or the Direct-Line Console (DLC). A maximum of eight operator positions can be assigned with a maximum of four of those being QCCs.

- Change telephone line button assignments and optional telephone features

  Use these procedures to assign outside lines/trunks to the buttons on a telephone, to copy these line/trunk assignments to additional telephones and to Assign System Access or Intercom buttons. These procedures can also be used to assign additional telephone features including:

  — Identifying analog multiline telephones that do not have built-in speakerphone or Hands Free Answer on Intercom

  — Identifying analog multiline telephones that require pairing of station jacks to provide Voice Announce to Busy

  — Calling Restrictions

- Assign Pickup Groups, Group Paging, Group Coverage, Calling Groups and lines/trunks assigned to calling groups and change group options
- Assign or change system features such as:

  — Transfer options

  — Camp-On and Call Park return times

  — Extension status

  — SMDR options

  — Allowed and Disallowed Lists and the telephones to which they are assigned.

- Create or change labels assigned to lines/trunks, extensions and calling groups and create or change Posted Messages or the System Speed Dial Directory
- Assign Night Service groups and options.

  Night Service provides after-hours coverage to extensions and calling groups.

- Install a FAX machine and set options for message waiting indication.

The programming procedures needed to perform these tasks are described in detail in the remainder of the chapter. More advanced programming procedures such as adding lines/trunks, are described in detail in Chapter 4, “Programming Procedures.”

Each of the procedures begins on the System Programming menu. Use one of the methods shown below to display the System Programming menu.

- At the console: **Menu**→`Sys Program`→`Exit`
- At the PC or with SPM: Type *spm*→Press any key→[F1]→[F5]

Before you begin any of the procedures in this chapter, you should read and understand all of the information presented in Chapter 1, “Programming Basics.”

Basic System Operating Conditions

The procedures in this section are all related to the system rather than to the operation of telephones, operator positions, lines, or trunks.

NOTE:
You must reset the system time when Daylight Savings Time begins and ends.

This section contains the following programming procedures:

- System Programming Position Assignment
- System Language
- System Date
- System Time

System Programming Position Assignment

Use this procedure to reassign the extension used for system programming. This extension should not be the same extension as that used for the operator position. The system programming position can be reassigned only to one of the first five extension jacks on the first MLX module. Only one system programming console is allowed per system.

If you are programming on the console, be aware of the following:

- The console must be connected to the extension currently assigned for system programming.
- As soon as you change the system programming extension, the system programming session is terminated. To proceed with system programming, you must connect the system programming console to the newly assigned extension and enter system programming again.

NOTE:
The telephone used for system programming must be an MLX-20L.

Summary: System Programming Position Assignment

Programmable by	System manager
Mode	All
Idle Condition	Not required
Planning Form	Form 1, System Planning
Factory Setting	First extension jack on the first MLX module (also set as an operator position)

Valid Entries	Extension number of one of the first five extension jacks on the first MLX module
Inspect	No
Copy Option	No
Console Procedure	System→SProg Port→**Drop**→Dial ext. no.→Enter→Exit
PC Procedure	F1→F2→Alt + P→Type ext. no.→F10→F5

Procedure: System Programming Position Assignment

	Console Display/Instructions	Additional Information	PC
1	**Select the System menu.**		
	System Programming: > Make a selection System Extensions SysRenumber Options Operator Tables LinesTrunks AuxEquip Exit NightSrvce		F1
2	**Select System Programming Port.**		
	System: Make a selection Restart MaintenBusy SProg Port Date Mode Time Board Renum Back/Restore Exit		F2
3	**Erase the current extension (*xxxx*).**		
	System Programming Port: Enter extension *xxxx* Backspace Exit Enter	Press **Drop**.	Alt+P
4	**Enter the new extension.**		
		SP: “Entering an Extension”	
5	**Save your entry.**		
	Select Enter.		F10
6	**Return to the System Programming menu.**		
	Select Exit.		F5

System Language

Your communications system offers you a choice of three languages (English, French, and Spanish) for the following options:

- System language.
- Station Message Detail Recording (SMDR) reports. See “System Features.”
- Print reports. See “Printing Reports.”
- Extensions. See “Optional Telephone Features.”

Use this procedure to set the system language. See the sections listed above to set a different language for an MLX display telephone, SMDR reports and printer reports.

NOTE:
MERLIN LEGEND Communication System Release 1.0 does not offer a choice of languages.

Summary: System Language

Programmable by	System manager
Mode	All
Idle Condition	Not required
Planning Form	Form 1, System Planning
Factory Setting	English
Valid Entries	English, French, Spanish
Inspect	No
Copy Option	No
Console Procedure	**More**→Language→SystemLang→Yes→Select a language →Enter
PC Procedure	PgUp→F6→F1→F3→Select a language→F10

Procedure: System Language

	Console Display/Instructions	Additional Information	PC
1	**Go to the second screen of the System Programming menu.**		
	System Programming: > Make a selection System Extensions SysRenumber Options Operator Tables LinesTrunks AuxEquip Exit NightSrvce	Press **More**.	PgUp
2	**Select Language.**		
	System Programming Make a selection Labeling Language Data Print Cntr-Prg Exit		F6
3	**Select System Language.**		
	Language: Make a selection SystemLang Extensions SMDR Printer Exit		F1
4	**Respond to the prompt.**		
	System Language: All stations, SMDR, and printer will be affected Do you want to continue? Yes No Exit	To set the system language select Yes. To terminate the procedure and return to the previous screen select No, then select Exit.	F3 F2 F5
5	**Select a system language. (The default is English.)**		
	System Language: Select one English French Spanish Exit Enter	Select English, French, or Spanish.	F1 F2 F3

	Console Display/Instructions	Additional Information	PC
6	**Save your entry.**		
	Select Enter.		F10
		For programming a single or block of extensions, see the Extension Language procedure under “Optional Telephone Features.”	

Set System Date

The System Date feature allows you to set the month, day, and year that appear on MLX display telephones and on Station Message Detail Recording (SMDR) reports.

NOTE:
If you are planning to use the SMDR feature, make sure the current date is set.

Summary: Set System Date

Programmable by	System manager
Mode	All
Idle Condition	Not required
Planning Form	Form 1, System Planning
Factory Setting	01-01-00
Valid Entries	Month: 01 to 12 Day: 01 to 31 Year: 00 to 99
Inspect	No
Copy Option	No
Console Procedure	System→Date→**Drop**→Dial current date→Enter→Exit
PC Procedure	F1→F7→Alt + P→Type current date→F10→F5

Procedure: Set System Date

	Console Display/Instructions	Additional Information	PC
1	**Select the System menu.**		
	System Programming: > Make a selection System Extensions SysRenumber Options Operator Tables LinesTrunks AuxEquip Exit NightSrvce		F1
2	**Select Date.**		
	System: Make a selection Restart MaintenBusy SProg Port Date Mode Time Board Renum Back/Restore Exit		F7
3	**Erase the current system date (*xxxxxx*).**		
	Date: Enter month (01-12), Date (01-31) Year (00-99) *xxxxxx* Backspace Exit Enter	Press **Drop**.	Alt + P
4	**Enter six digits for the current date.**		
		Dial or type [*mmddyy*].	
5	**Save your entry.**		
	Select Enter.		F10
6	**Return to the System Programming menu.**		
	Select Exit.		F5

Set System Time

The System Time feature allows you to set the time that appears on MLX display telephones and on SMDR reports.

NOTE:
If you are planning to use the SMDR feature, make sure the system time is set accurately. If you change the system time while the system is in Night Service mode, Night Service is deactivated and must be manually reactivated. If you have installed applications such as Call Management System (CMS) or AUDIX Voice Power®, you may need to set the time in the applications software whenever you reset the system time.

Summary: Set System Time

Programmable by	System manager
Mode	All
Idle Condition	Not Required
Planning Form	Form 1, System Planning
Factory Setting	0000
Valid Entries	0000 to 2359
Inspect	No
Copy Option	No
Console Procedure	System→Time→**Drop**→Dial current time→Enter→Exit
PC Procedure	F1→F8→Alt + P→Type current time→F10→F5

Procedure: Set System Time

	Console Display/Instructions	Additional Information	PC
1	**Select the System menu.**		
	System Programming: > Make a selection System Extensions SysRenumber Options Operator Tables LinesTrunks AuxEquip Exit NightSrvce		F1

	Console Display/Instructions	Additional Information	PC
2	**Select Time.**		
	System: Make a selection Restart MaintenBusy SProg Port Date Mode Time Board Renum Back/Restore Exit		F8
3	**Erase the current system time (*xxxx*).**		
	Date: Enter hour (00-23) and minutes (00-59) *xxxx* Backspace Exit Enter	Press **Drop**.	Alt + P
4	**Enter four digits for the current time.**		
		Dial or type [*hhmm*]. Use 24-hour (military) notation (for example, enter 11:30 p.m. as 2330). Use leading zeros if necessary (for example, enter 4 a.m. as 0400).	
5	**Save your entry.**		
	Select Enter.		F10
6	**Return to the System Programming menu.**		
	Select Exit.		F5

System Renumbering

The procedures in this section are used to reassign extension numbers for either the 2-digit, 3-digit, and Set Up Space numbering plans.

NOTE:
System Renumbering is called Flexible Numbering in the MERLIN® II Communications System. This is *not* the same as Board Renumbering, an option used when modules in the control unit are changed.

This section contains the following programming procedures:

- Single Renumbering
- Block Renumbering

To reassign the system numbering plan or DSS **Page** buttons see Chapter 4, "Programming Procedures."

Use the single renumbering procedure any time the extension numbers you are changing *from* or *to* are not sequential.

Block renumbering is quicker, but you can use block renumbering only when the extension numbers you are changing *from* and *to* are sequential.

When trunk or extension modules are removed from the control unit, the remaining modules must be rearranged so that no empty slots remain. The system does not acknowledge any modules installed after an empty slot; therefore, if the system is renumbered, extensions are not assigned to extension jacks after the empty slots.

NOTE:
Figures 3–1, 3–2, and 3–3 show the default settings in the gray spaces. Extensions can be renumbered to any number shown in the white spaces.

0	Operator Console (not flexible) 0					
1	Extensions 10–19					
2	Extensions 20–29					
3	Extensions 30–39					
4	Extensions 40–49					
5	Extensions 50–59					
6	Extensions 60–66		Extra Extensions 6700–6842	6843–6849	Extra MFMs/ Terminal Adapters 6850–6992	6993–6999
7	Main Pool 70	MFMs/ Terminal Adapters 710–766	767–769	Calling Groups 770–791,7920–7929		Paging Groups 793–799
8	800*	Trunks 801–880		Park 881–888	889†	Pools 890–899
9	ARS Access (Hybrid/PBX Mode) / Idle Line Access 9					

* Listed Directory Number (QCC Queue)
† Remote Access
NOTE: “0” and “10” are the same station.

Figure 3–1. 2-Digit Numbering

0	Operator Console (not flexible) 0				
1	Extensions 100–199				
2	Extensions 200–299				
3	MFMs/Terminal Adapters 300–399				
4	MFMs/Terminal Adapters 400–499				
5	500–599				
6	600–699				
7	Main Pool 70	71–76	Calling Groups 770–791, 7920–7929		Paging Groups 793–799
8	800*	Trunks 801–880	Park 881–888	889†	Pools 890–899
9	ARS Access (Hybrid/PBX mode)/Idle Line Access				

* Listed Directory Number (QCC)
† Remote Access
NOTE: “0” and “100” are the same station.

Figure 3–2. 3-Digit Numbering

0	Operator Console (not flexible) 0					
1	100–199					
2	200–299					
3	300–399					
4	400–499					
5	500–599					
6	600–699					
7	Main Pool 70	Extensions 7100–7299	MFMs/Terminal Adapters 7300–7499	7500–7699	Calling Group 770–791, 7920–7929	Paging Groups 793–799
8	800*	Trunks 801–880		Park 881–888	889†	Pools 890–899
9	ARS Access (Hybrid/PBX mode)/Idle Line Access 9					

* Listed Directory Number (QCC).
† Remote Access
NOTE: “0” and “7001” are the same station.

Figure 3–3. Set Up Space Numbering

Single Renumbering

Use this procedure to assign a specified extension number to a telephone, accessory, line, pool (Hybrid/PBX only), calling group, paging group, or Listed Directory Number. Single renumbering is also used for Remote Access, Park, Idle Line Access (Key and Behind Switch only), and Automatic Route Selection (Hybrid/PBX only).

CAUTION:
Select `Exit` *on the console or* F5 *on the PC after renumbering extensions. If you press* **Home**, *extensions may remain in the forced idle condition (indicated when the LED next to each DSS button is on). To restore extensions to their normal operating state, restart the system.*

Summary: Single Renumbering

Programmable by	System manager
Mode	All
Idle Condition	System idle
Planning Form	Form 2a, System Numbering: Extension Jacks Form 2b, System Numbering: Digital Adjuncts Form 2d, System Numbering: Special Renumbers
Factory Setting	Not applicable
Valid Entries	Old and new extension numbers
Inspect	Yes
Copy Option	No
Console Procedure	SysRenumber→Single→Select item→Dial old ext. no.→Enter→Dial new ext. no.→Enter→Exit→Exit
PC Procedure	F2→F2→Select item→Type old ext. no.→F10→Type new ext. no.→F10→F5→F5

Procedure: Single Renumbering

	Console Display/Instructions	Additional Information	PC
1	**Select the System Renumbering menu.**		
	System Programming: > Make a selection System Extensions SysRenumber Options Operator Tables LinesTrunks AuxEquip Exit NightSrvce		F2
2	**Select Single renumbering.**		
	System: Make a selection Default Numbering Single Block Exit	*If you get the System Busy message, wait for an idle condition or exit system programming and try again later.*	F2

	Console Display/Instructions	Additional Information	PC
3	**Review the menu options.**		
	System Renumber: > Make a selection Lines Grp Calling Extensions Adjuncts Pools Park Group Page ARS Dial0ut Exit RemoteAccs	If the item you want to renumber is not displayed, go to the second screen of the System Renumber menu.	
		Press **More**.	PgUp
	System Renumber: Make a selection DSS Buttons ListDirctNo Exit		
4	**Select an item for renumbering.**		
		Press the button or function key next to your selection.	
5	**Enter the old extension for the item selected (****) in Step 4.**		
	****: Enter old **** number Backspace Exit Enter	*If you get the Station Busy message, wait for an idle connection or exit system programming and try again later.* **SP:** "Entering an Extension"	
6	**Save your entry.**		
	Select **Enter**.		F10
7	**Enter the new extension.**		
	**** *xxxx*: Enter new **** number Backspace Next Exit Enter	**** = item selected in Step 4 *xxxx* = extension entered in Step 5 **SP:** "Entering an Extension"	
8	**Save your entry.**		
	Select **Enter** or **Next**	If you use **Next** to renumber the next item (****) displayed on Line 1, return to Step 7.	F10 F9

	Console Display/Instructions	Additional Information	PC
9	**Return to the System Programming menu.**		
	Select `Exit` two times.		F5 F5

Block Renumbering

Use this procedure to assign extension numbers to a group of extensions, accessories, or lines. Both the original numbers and the numbers they are being changed to must be sequentially numbered.

When required, this procedure should be performed immediately following the selection of a system numbering plan.

CAUTION:
Select `Exit` *on the console or* F5 *on the PC when you have finished renumbering extensions. If you press* **Home**, *extensions may remain in the forced idle condition (indicated when the LED next to each DSS button is on). To restore extensions to their normal operating state, restart the system.*

Summary: Block Renumbering

Programmable by	System manager
Mode	All
Idle Condition	System idle
Planning Form	Form 2a, System Numbering: Extension Jacks Form 2b, System Numbering: Digital Adjuncts Form 2d, System Numbering: Special Renumbers
Factory Setting	Not applicable
Valid Entries	Old and new extension numbers
Inspect	Yes
Copy Option	Yes
Console Procedure	`SysRenumber`→`Block`→Select type of group→Dial no. of first group member→`Enter`→Dial no. of last group member→`Enter`→Dial new beginning no.→`Enter`→`Exit`→`Exit`→`Exit`
PC Procedure	F2 → F3 →Select type of group→Type no. of first group member→F10 →Type no. of last group member→F10 → Type new beginning no.→F10 → F5 → F5 → F5

Procedure: Block Renumbering

	Console Display/Instructions	Additional Information	PC
1	**Select the System Renumber menu.**		
	System Programming: > Make a selection System Extensions SysRenumber Options Operator Tables LinesTrunks AuxEquip Exit NightSrvce		F2
2	**Select Block renumbering.**		
	System Renumber: Make a selection Default Numbering Single Block Exit	*If you get the System Busy message, wait for an idle condition or exit system programming and try again later.*	F3
3	**Select the type of group to renumber.**		
	Block Renumber: Make a selection Lines Extensions Adjuncts Exit	Select **Lines**, **Extensions**, or **Adjuncts**.	F1 F2 F3
4	**Enter the currently assigned number for the first member of the group.**		
	Number ****: Enter starting **** Backspace Exit Enter	**** = option name selected in Step 3 **SP:** “Entering an Extension”	
5	**Save your entry.**		
	Select **Enter**.		F10

	Console Display/Instructions	Additional Information	PC
6	**Enter the currently assigned number for the last member of the group.**		

	`Start at nnnn:`
	`Enter ending ****`
	
	`Backspace`
	`Exit  Enter`
		nnnn = number entered in Step 4
		**** = option name selected in Step 3
		
		SP: "Entering an Extension"	

7	**Save your entry.**		
	Select **Enter**.		F10
8	**Enter the new extension number.**		

	`Start At nnnn`
	`Enter new **** number`
	
	`Backspace`
	`Exit  Enter`
		nnnn = number entered in Step 6
		**** = option name selected in Step 3	

9	**Save your entry.**		
	Select **Enter**.		F10
10	**Return to the System Programming menu.**		
	Select **Exit** three times.		F5 F5 F5

System Operator Positions

Use the following procedures to add an operator position or to change an existing operator position.

The Queued Call Console (QCC) operator position is available only for Hybrid/PBX systems. The Direct-Line Console (DLC) operator position is available in any mode and must be programmed if you have Call Management Systems connected to any operator extension jacks.

Table 3–1 shows the maximum number of operator positions allowed for any one system.

Table 3–1. Maximum Number of Operator Positions

Position Type	Type of Telephone	Maximum Positions
QCC	MLX-20L	4
DLC	MLX-20L	8
	MLX-28D	
	Analog multiline telephones	
	MERLIN II Display Consoles	
Total QCC + DLC		8

Any combination of operator positions can be assigned as long as no more than four operator positions are QCCs and the total number of operator positions does not exceed eight.

If you want to designate a new operator position and the system already has the maximum number of operator positions, you must change an existing operator position to a nonoperator position before you designate a new operator position.

NOTE:
When you change an extension to an operator position, or vice versa, the system returns the port (extension jack) type of that extension to the factory setting. You must reprogram lines and any features for that telephone or console. You may also need to change any attached accessory equipment and optional features.

Primary Operator Positions

The primary operator position is the extension to which your call is directed when 0 is dialed on a System Access button. The first extension jack on the first MLX module in your system is assigned as the primary operator position. If your system has QCC operator positions, this position must be changed from the factory setting (DLC) to a QCC operator position. (The primary operator extension cannot be changed from the first extension on the first MLX module).

QCC System Operator Positions

This procedure applies to Hybrid/PBX systems only. Note that both QCC and DLC operator positions can be assigned with this procedure, although its primary purpose is to assign QCC operator positions.

QCC operators serve as central answering positions for all incoming calls. Incoming calls are held in the QCC queue and are directed to each QCC operator in a prioritized sequence. The calls are received one at a time, regardless of the number of incoming calls to the system.

Additional QCC operator positions can be assigned only to the first and fifth extension jacks of the MLX modules. A maximum of four QCC operator positions can be assigned. Use this procedure to specify QCC operator positions that serve as central answering positions for all incoming calls.

IMPORTANT:
If you want to add or remove QCC operator positions, the following conditions apply:

- *If other QCC positions remain in your system, the primary QCC operator position cannot be removed.*
- *When QCC operator positions are added, the primary QCC operator position should be the first one added.*
- *If QCC operator positions are being removed, the primary QCC operator position must be the last one removed.*

Summary: QCC Operator Positions

Programmable by	System manager
Mode	All
Idle Condition	System idle
Planning Form	Form 2a, System Numbering: Extension Jacks
Factory Setting	Type: DLC
Valid Entries	First or fifth extension jack on MLX module (maximum: two per module; maximum: four QCCs per system)
Inspect	Yes
Copy Option	No
Console Procedure	Operator→Positions→Queued Call→Dial ext. no.→Enter→Store All
PC Procedure	F3→F1→F2→Type ext. no.→F10→F3

Procedure: QCC Operator Positions

Console Display/Instructions	Additional Information	PC
1 Select the Operator menu.		
System Programming: > Make a selection System Extensions SysRenumber Options Operator Tables LinesTrunks AuxEquip Exit NightSrvce		F3
2 Select Positions.		
System Operator: Make a selection Positions Queued Call Hold Timer DLC Hold Exit		F1
3 Select Queued Call (QCC).		
System Operator: Make a selection Direct Line Queued Call Exit	*If you get the System Busy message, wait for an idle condition or exit system programming and try again later.*	F2

Console Display/Instructions	Additional Information	PC
4 Specify the QCC extension.		

`QCC Operator Positions:`
`Enter extension`
 	
`Store All  Delete`
`Backspace`
`Exit  Enter`
	If no DSS is attached:
	SP: "Entering an Extension"
	
	If DSS is attached:
	Toggle the red LED on or off as required. Go to Step 6.
	On = extension is currently assigned as a QCC position.
	Flashing = extension can be assigned as a QCC position.
	Off = extension cannot be assigned as a QCC position.	

5 Assign or remove the QCC operator extension.		
Select **Enter** or **Delete**.		F10 F8
	You may continue to assign or remove QCC operator positions by repeating Steps 4 and 5.	
6 Indicate that you have finished entering all positions.		
Select **Store All**.		F3
	The session is terminated and the system restarts. You must enter system programming again to continue.	

DLC Operator Positions

DLC operator positions can be assigned to the first and fifth extension jacks on the first modules with digital or analog multiline extension jacks. A maximum of eight DLC operator positions can be assigned. Any combination of operator positions can be assigned as long as there are no more than four QCC operator positions and no more than a total of eight operator positions.

Use this procedure to specify extensions that serve as central answering positions for all incoming calls, for Call Management Systems (CMSs) connected to operator extension jacks, or as calling group supervisor extensions. (You do not need to use this procedure in a Key or Behind Switch system unless you have more than one DLC position.) For a new system, remove the factory-set DLC operator position assignment for any telephone not used as an operator position.

Lines and trunks are assigned on individual buttons.

The system programming console can have several incoming calls ringing simultaneously.

Each CMS requires two DLC operator positions to connect the equipment and one position to serve as CMS supervisor.

Summary: Identify or Remove DLC Operator Positions

Programmable by	System manager
Mode	All
Idle Condition	System idle
Planning Form	Form 2a, System Numbering: Extension Jacks
Factory Setting	Type: DLC
Valid Entries	First or fifth extension jack on MLX module (maximum: two per module; maximum: eight DLCs per system)
Inspect	Yes
Copy Option	No
Console Procedure	Operator→Positions→Direct Line→Dial ext. no.→Enter→Store All
PC Procedure	F3→F1→F1→Type ext. no. F10→F3

Procedure: Identify or Remove DLC Operator Positions

	Console Display/Instructions	Additional Information	PC
1	**Select the Operator menu.**		
	System Programming: > Make a selection System Extensions SysRenumber Options Operator Tables LinesTrunks AuxEquip Exit NightSrvce		F3
2	**Select Positions.**		
	System Operator: Make a selection Positions Queued Call Hold Timer DLC Hold Exit		F1

	Console Display/Instructions	Additional Information	PC
3	**Select Direct-Line Console (DLC).**		
	System Operator: Make a selection Direct Line Queued Call Exit	*If you get the System Busy message, wait for an idle condition or exit system programming and try again later.*	F1
4	**Specify the DLC extension.**		
	DLC Operator Positions: Enter extension Store All Delete Backspace Exit Enter	**If no DSS is attached:** **SP:** "Entering an Extension" **If DSS is attached:** Toggle the red LED on or off as required. Go to Step 6. On = extension is currently assigned as a DLC position. Flashing = extension can be assigned as a DLC position. Off = extension cannot be assigned as a DLC position.	
5	**Assign or remove the DLC operator extension.**		
	Select **Enter** or **Delete**.	You may continue to assign or remove DLC operator positions by repeating Steps 4 and 5.	F10 F8
6	**Indicate that you have finished entering all positions.**		
	Select **Store All**.	The session is terminated, and the system restarts. You must enter system programming again to continue.	F3

Optional Operator Features

The procedures in this section affect feature programming for both DLC and QCC operator positions and include the following:

- Operator Hold Timer
- DLC Operator Automatic Hold

QCC operator features are covered in the next section.

Operator Hold Timer

Use this procedure to set the length of the operator hold timer for all DLCs and QCCs. If the system operator does not pick up the call within the time programmed, an abbreviated ring reminds the operator that a call is being held.

This option cannot be programmed for individual operator positions.

Summary: Operator Hold Timer

Programmable by	System manager
Mode	All
Idle Condition	Not required
Planning Form	Form 6a, Optional Operator Features
Factory Setting	60 seconds
Valid Entries	10 to 255 seconds
Inspect	No
Copy Option	No
Console Procedure	`Operator`→`Hold Timer`→**Drop**→Dial no. of seconds→ `Enter`→`Exit`
PC Procedure	[F3]→[F3]→[Alt] + [P]→Type no. of seconds→[F10]→[F5]

Procedure: Operator Hold Timer

	Console Display/Instructions	Additional Information	PC
1	**Select the Operator menu.**		
	System Programming: > Make a selection System Extensions SysRenumber Options Operator Tables LinesTrunks AuxEquip Exit NightSrvce		F3
2	**Select Hold Timer.**		
	System Operator: Make a selection Positions Queued Call Hold Timer DLC Hold Exit		F3
3	**Erase the current hold timer setting (*xxx*).**		
	Operator Hold Timer: Enter length of hold timer (10 to 255 sec) *xxx* Backspace Exit Enter	Press **Drop**.	Alt + P
4	**Enter the number of seconds to hold the call (*nnn* = 10 to 255).**		
		Dial or type [nnn].	Û
5	**Save your entry.**		
	Select **Enter**.		F10
6	**Return to the System Programming menu.**		
	Select **Exit**.		F5

DLC Operator Automatic Hold

Use this procedure to enable or disable the DLC Operator Automatic Hold feature for DLC operator positions. When this feature is enabled, it prevents accidental call disconnection.

Summary: DLC Operator Automatic Hold

Programmable by	System manager
Mode	All
Idle Condition	Not required
Planning Form	Form 6a, Optional Operator Features
Factory Setting	Disabled
Valid Entries	Disabled, Enabled
Inspect	No
Copy Option	No
Console Procedure	Operator→DLC Hold→Automatic Hold Enable or Automatic Hold Disable→Enter→Exit
PC Procedure	F3→F4→F1 or F2→F10→F5

Procedure: DLC Operator Automatic Hold

	Console Display/Instructions	Additional Information	PC
1	**Select the Operator menu.**		
	System Programming: > Make a selection System Extensions SysRenumber Options Operator Tables LinesTrunks AuxEquip Exit NightSrvce		F3
2	**Select DLC Hold.**		
	System Operator: Make a selection Positions Queued Call Hold Timer DLC Hold Exit		F4

	Console Display/Instructions	Additional Information	PC
3	**Specify whether to enable or disable automatic hold.**		
	DLC Auto Hold: Select one Auto Hold Enable Auto Hold Disable Exit Enter	Select Auto Hold Enable or Auto Hold Disable.	F1 F2
4	**Save your entry.**		
	Select Enter.		F10
5	**Return to the System Programming menu.**		
	Select Exit.		F5

QCC Optional Features

This section covers how to program the following options for QCC operator positions:

- Hold Return
- Automatic Hold or Release
- Queue over Threshold
- Elevate Priority
- Calls-in-Queue Alert
- QCC Operator to Receive Call Types
- Call Type Queue Priority Level
- Message Center Operation
- Automatic or Manual Extended (Directed) Call Completion
- Return Ring
- Position Busy Backup

NOTE:
These options are available in Hybrid/PBX mode only.

Hold Return

Use this procedure to determine whether calls on hold are returned to the QCC queue or remain on hold, on the QCC operator console, after the hold timer has expired twice. After the hold timer expires the first time, the operator hears an abbreviated ring as a call-on-hold reminder. If another call is received at the same time that the hold timer expires, 10 seconds are added to the programmed operator hold timer interval for the first call. If the QCC operator does not pick up a call by the time the hold timer expires twice, the call can be programmed to either remain on hold or return to the QCC queue.

This option cannot be programmed for individual QCC operator positions. The single setting applies to all QCC operator positions.

Summary: Hold Return

Programmable by	System manager
Mode	All
Idle Condition	Not required
Planning Form	Form 6a, Optional Operator Features
Factory Setting	Calls remain on hold
Valid Entries	Remain on hold, Return to QCC queue
Inspect	No
Copy Option	No
Console Procedure	Operator→Queued Call→Hold Rtrn→Return to Queue or Remain on Hold→Enter→Exit→Exit
PC Procedure	F3→F2→F1→F1 or F2→F10→F5→F5

Procedure: Hold Return

	Console Display/Instructions	Additional Information	PC
1	**Select the Operator menu.**		
	System Programming: > Make a selection System Extensions SysRenumber Options Operator Tables LinesTrunks AuxEquip Exit NightSrvce		F3
2	**Select Queued Call.**		
	System Operator: Make a selection Positions Queued Call Hold Timer DLC Hold Exit		F2
3	**Select Hold Return.**		
	Queued Call Operator: >> Make a selection Hold Rtrn InQue Alert HoldRelease Call Types Threshold Msg Center ElvatePrior ExtndComplt Exit Return Ring		F1

	Console Display/Instructions	Additional Information	PC
4	**Specify whether calls on hold return to the QCC queue or remain on hold when the hold timer expires twice.**		

	`Queued Call Hold Return:`
	`Select one`
	`Return to Queue`
	`Remain on Hold`
	
	`Exit  Enter`
		Select **Return to Queue** or **Remain on Hold**.	F1
			F2

5	**Save your entry.**		
	Select **Enter**.		F10
6	**Return to the System Programming menu.**		
	Select **Exit** two times.		F5 F5

Automatic Hold or Release

Use this procedure to specify whether a call in progress (on a call button) is automatically put on hold (Automatic Hold) or disconnected (Automatic Release) when the operator presses another button.

This option cannot be programmed for individual QCC operator positions. The single setting applies to all QCC operator positions.

Summary: Automatic Hold or Release

Programmable by	System manager
Mode	All
Idle Condition	Not required
Planning Form	Form 6a, Optional Operator Features
Factory Setting	Automatic Release
Valid Entries	Auto Hold, Auto Release
Inspect	No
Copy Option	No
Console Procedure	`Operator`→`Queued Call`→`HoldRelease`→`Auto Hold` or `Auto Release`→`Enter`→`Exit`→`Exit`
PC Procedure	F3 → F2 → F2 → F1 or F2 → F10 → F5 → F5

Procedure: Automatic Hold or Release

	Console Display/Instructions	Additional Information	PC
1	**Select the Operator menu.**		
	System Programming: > Make a selection System Extensions SysRenumber Options Operator Tables LinesTrunks AuxEquip Exit NightSrvce		F3
2	**Select Queued Call.**		
	System Operator: Make a selection Positions Queued Call Hold Timer DLC Hold Exit		F2
3	**Select Hold Release.**		
	Queued Call Operator: >> Make a selection Hold Rtrn InQue Alert HoldRelease Call Types Threshold Msg Center ElvatePrior ExtndComplt Exit Return Ring		F2
4	**Specify whether in-progress calls are automatically put on hold or disconnected when another call button is pressed.**		
	Queued Call HoldRelease: Select one Auto Hold Auto Release Exit Enter	Select **Auto Hold** or **Auto Release**.	F1 F2
5	**Save your entry.**		
	Select **Enter**.		F10
6	**Return to the System Programming menu.**		
	Select **Exit** two times.		F5 F5

Queue over Threshold

Use this procedure to specify the maximum number of calls (threshold) in the QCC queue before system operators are notified with a tone that the threshold has been reached or exceeded. If the threshold is set to 0, operators are not notified.

Summary: Queue over Threshold

Programmable by	System manager
Mode	Hybrid/PBX
Idle Condition	Not required
Planning Form	Form 6a, Optional Operator Features
Factory Setting	0
Valid Entries	0 to 99
Inspect	No
Copy Option	No
Console Procedure	Operator→Queued Call→Threshold→**Drop**→Dial no. of calls→Enter→Exit→Exit
PC Procedure	F3→F2→F3→Alt + P→Type no. of calls→F10→F5→F5

Procedure: Queue over Threshold

	Console Display/Instructions	Additional Information	PC
1	**Select the Operator menu.**		
	System Programming: > Make a selection System Extensions SysRenumber Options Operator Tables LinesTrunks AuxEquip Exit NightSrvce		F3
2	**Select Queued Call.**		
	System Operator: Make a selection Positions Queued Call Hold Timer DLC Hold Exit		F2

	Console Display/Instructions	Additional Information	PC
3	**Select Threshold.**		

	`Queued Call Operator: >`
	`Make a selection`
	`Hold Rtrn  InQue Alert`
	`HoldRelease  Call Types`
	`Threshold  Msg Center`
	`ElvatePrior  ExtndComplt`
	`Exit  Return Ring`
			F3

4	**Erase the current threshold (*xx*).**		

	`Queued Over Threshold:`
	`Enter maximum number for`
	`Queue (0 to 99)`
	`xx`
	
	`Backspace`
	`Exit  Enter`
		Press **Drop**.	Alt + P

5	**Enter the maximum number of calls allowed in QCC queue before operators are notified (*nn* = 0 to 99).**		
		Use 0 to specify that operators are not notified. Dial or type [*nn*].	
6	**Save your entry.**		
	Select **Enter**.		F10
7	**Return to the System Programming menu.**		
	Select **Exit** two times.		F5 F5

Elevate Priority

Use this procedure to specify the length of time before calls waiting in the QCC queue are automatically reprioritized to a higher level. If priority is set to 0, calls are not prioritized.

Summary: Elevate Priority

Programmable by	System manager
Mode	Hybrid/PBX
Idle Condition	Not required
Planning Form	Form 6a, Optional Operator Features
Factory Setting	0 seconds

Valid Entries	0 and 5 to 30 seconds
Inspect	No
Copy Option	No
Console Procedure	Operator→Queued Call→ElvatePrior→**Drop**→Dial no. of seconds→Enter→Exit→Exit
PC Procedure	F3→F2→F4→Alt + P→Type no. of seconds→F10→F5→F5

Procedure: Elevate Priority

	Console Display/Instructions	Additional Information	PC
1	**Select the Operator menu.**		
	System Programming: > Make a selection System Extensions SysRenumber Options Operator Tables LinesTrunks AuxEquip Exit NightSrvce		F3
2	**Select Queued Call.**		
	System Operator: Make a selection Positions Queued Call Hold Timer DLC Hold Exit		F2
3	**Select Elevate Priority.**		
	Queued Call Operator: >> Make a selection Hold Rtrn InQue Alert HoldRelease Call Types Threshold Msg Center ElvatePrior ExtndComplt Exit Return Ring		F4
4	**Erase the current call priority (*xx*).**		
	Priority Elevated: Enter times (5-30, 0=no) call priority elevated *xx* Backspace Exit Enter	Press **Drop**.	Alt + P

	Console Display/Instructions	Additional Information	PC
5	**Enter the number of seconds calls will wait in the queue before being reprioritized (*nn* = 5 to 30).**		
		Use 0 to specify that calls are not reprioritized.	
		Dial or type [*nn*].	
6	**Save your entry.**		
	Select `Enter`.		F10
7	**Return to the System Programming menu.**		
	Select `Exit` two times.		F5 F5

Calls-In-Queue Alert

Use this procedure to specify whether each QCC operator is notified (with a single beep) when a new call enters the QCC queue.

Summary: Calls-In-Queue Alert

Programmable by	System manager
Mode	Hybrid/PBX
Idle Condition	Not required
Planning Form	Form 6a, Optional Operator Features
Factory Setting	Disable
Valid Entries	Enable, Disable
Inspect	Yes
Copy Option	No
Console Procedure	`Operator`→`Queued Call`→`InQue Alert`→Dial ext. no.→`Enter`→`InQue Alert Enable` or `InQue Alert Disable`→`Enter`→`Exit`→`Exit`
PC Procedure	F3→F2→F6→Type ext. no.→F10→F1 or F2→F10→F5→F5

Procedure: Calls-In-Queue Alert

	Console Display/Instructions	Additional Information	PC
1	**Select the Operator menu.**		
	System Programming: > Make a selection System Extensions SysRenumber Options Operator Tables LinesTrunks AuxEquip Exit NightSrvce		F3
2	**Select Queued Call.**		
	System Operator: Make a selection Positions Queued Call Hold Timer DLC Hold Exit		F2
3	**Select InQueue Alert.**		
	Queued Call Operator: > Make a selection Hold Rtrn InQue Alert HoldRelease Call Types Threshold Msg Center ElvatePrior ExtndComplt Exit Return Ring		F6
4	**Enter the QCC extension to receive the calls-in-queue alert.**		
	In Queue Alert: Enter QCC Operator extension number Backspace Exit Enter	**If no DSS is attached:** **SP:** “Entering an Extension” **If DSS is attached:** Toggle the red LED on or off as required. Go to Step 7. On = operator receives calls-in-queue alert. Flashing = operator does not receive calls-in-queue alert. Off = not an operator position.	

	Console Display/Instructions	Additional Information	PC
5	**Specify whether the operator receives the alert.**		
	QCC Operator *xxxx*: Select one InQue Alert Enable InQue Alert Disable Next Exit Enter	*xxxx* = operator entered in Step 1	
		Select **InQue Alert Enable** or **InQue Alert Disable**.	F1 F2
6	**Save your entry.**		
	Select **Enter** or **Next**		F10 F9
		Use **Next** to program the next QCC position. The next QCC operator will be displayed on Line 1.	
7	**Return to the System Programming menu.**		
	Select **Exit** two times.		F5 F5

QCC Operator to Receive Call Types

Use this procedure to specify which QCC operators receive the following types of calls:

- Dial 0 calls (internal calls to the system operator)
- DID calls to invalid destinations (unassigned extension numbers)
- Calls to the Listed Directory Number (extension for the QCC queue)
- Calls programmed to return to the QCC queue (returning from directing, camped-on, held calls, and operator parked calls)
- Group Coverage calls
- Forward/Follow Me calls

The QCC queue can be a receiver for the maximum number of coverage groups (30).

NOTES:

1. If you want a QCC operator position to operate as a message center (receiving returning parked and directed calls, Group Coverage calls, and calls to unassigned DID numbers), program the Message Center option before you assign the operator to receive call types.
2. This procedure does not include use of the menu options `Follow/Frwd` or `QCC Ext`. These two options are used to assign queue priorities and are not associated with individual QCC operators. See “Call Type Queue Priority Level.”
3. This procedure does not include programming the operator position to receive calls on individual lines or trunks. See “QCC Operator to Receive Calls.”
4. Programming an operator position to receive DID calls to invalid destinations does not cause the calls to ring into the QCC queue unless you program such calls to be sent to a backup extension. See “Invalid Destination.” When no operator is assigned to receive the call types, the call does not ring into the QCC queue, and the caller hears an error tone.
5. If a trunk assigned to ring into the QCC queue is to be assigned shared remote access, assign that trunk remote access before performing this procedure. See “Remote Access Trunk Assignment.”

Summary: QCC Operator to Receive Call Types

Programmable by	System manager
Mode	Hybrid/PBX
Idle Condition	Not required
Planning Form	Form 6a, Optional Operator Features
Factory Setting	QCC operator receives the following calls: Dial 0 Unassigned DID Listed Directory Number Returning
Valid Entries	Not applicable
Inspect	Yes
Copy Option	No
Console Procedure	`Operator`→`Queued Call`→`Call Types`→Select a call type →`Operator`→Dial coverage group no.→`Enter`→Dial ext. no.→`Enter`→`Exit`→`Exit`→`Exit`→`Exit`→`Exit`
PC Procedure	[F3]→[F2]→[F7]→Select a call type→[F2]→Type coverage group no.→[F10]→Type ext. no.→[F10]→[F5]→[F5]→[F5]→[F5]→[F5]

Procedure: QCC Operator to Receive Call Types

	Console Display/Instructions	Additional Information	PC
1	**Select the Operator menu.**		
	System Programming: > Make a selection System Extensions SysRenumber Options Operator Tables LinesTrunks AuxEquip Exit NightSrvce		F3
2	**Select Queued Call.**		
	System Operator: Make a selection Positions Queued Call Hold Timer DLC Hold Exit		F2
3	**Select Call Types.**		
	Queued Call Operator: >> Make a selection Hold Rtrn InQue Alert HoldRelease Call Types Threshold Msg Center ElvatePrior ExtndComplt Exit Return Ring		F7
4	**Select a call type.**	● ◆	
	Call Type: Make a selection Dial 0 QCC Ext Follow/Frwd Returning UnassignDID GrpCoverage ListedNumbr Exit	To use **Follow/Frwd** or **QCC Ext**, see "Call Type Queue Priority Level." If you select **GrpCoverage**, go to ● Group Coverage Procedure. If you select **Dial0**, **UnassignDID**, **ListedNumbr**, or **Returning**, go to ◆ Call Type Procedure. Press the button or function key next to your selection.	

● Group Coverage Procedure

	Console Display/Instructions	Additional Information	PC
1	**Select Operator.**		
	**** Make a selection Priority Operator Exit	**** = option name selected in Step 4	F2
2	**Enter the group coverage number (*nn* = 1 to 30).**		
	Group Coverage Calls: Enter grp coverage number (1-30) Backspace Exit Enter	Dial or type [*nn*].	
3	**Save your entry.**		
	Select **Enter**.		F10
4	**Specify the operator position.**		
	Operator GrpCoverage *xx*: Enter QCC operator extension number Delete Backspace Next Exit Enter	*xx* = number entered in Step 6 **If no DSS is attached**: **SP:** "Entering an Extension" **If DSS is attached**: Toggle the red LED on or off as required. Go to Step 6. On = operator receives Group Coverage calls. Flashing = operator does not receive Group Coverage calls. Off = extension is not an operator position.	
5	**Assign or remove the operator from Group Coverage calls.**		
	Select **Enter** or **Delete**.	You may continue to assign or remove QCC operators from Group Coverage calls by repeating Steps 4 and 5.	F10 F8

Console Display/Instructions	Additional Information	PC
6 Assign operators to the receive calls from the next Group Coverage number or go to Step 7.		
Select **Next**		F9
	Return to Step 4. The next Group Coverage number will display on Line 1.	
7 Return to the System Programming menu.		
Select **Exit** five times.		F5 F5 F5 F5 F5

◆ Call Type Procedure

1 Select Operator.

```
****
Make a selection
Priority
Operator


Exit
```

**** = option name selected in Step 4

F2

2 Specify the operator position.

```
**** Operator:
Enter QCC operator
extension number (0=init)


                Delete
Backspace
Exit            Enter
```

**** = option name selected in Step 4

If no DSS is attached:
SP: "Entering an Extension"

If DSS is attached:
Toggle the red LED on or off as required.
On = operator receives call type.
Flashing = operator does not receive call type.
Off = extension is not an operator position.

3 Assign or remove the operator from the call type specified in Step 4 of the main procedure.

Select **Enter** or F10
Delete. F8

You may continue to assign or remove QCC operators from the call type by repeating Steps 2 and 3.

4 Return to the System Programming menu.

Select **Exit** five times. F5 F5 F5 F5 F5

Call Type Queue Priority Level

Use this procedure to assign a priority value (1 to 7) that determines the order in which calls programmed to ring into the QCC queue are sent to QCC system operator positions. A value of 1 is the highest priority. The QCC queue priority level is assigned for the following types of calls:

- Dial 0 calls (internal calls to the system operator)
- DID calls to invalid destinations (unassigned extension numbers)
- Calls to the Listed Directory Number (extension for the QCC queue)
- Calls programmed to return to the QCC queue (returning from extending, camped-on, held calls, and operator parked calls)
- Group Coverage calls
- Calls signed in (Follow) or forwarded to the system operator
- Calls to a system operator extension number

This procedure does not include programming the QCC queue priority level for individual lines or trunks to ring into the queue. See “QCC Queue Priority Level.”

Summary: Call Type Queue Priority Level

Programmable by	System manager
Mode	Hybrid/PBX
Idle Condition	Not required
Planning Form	Form 6a, Optional Operator Features
Factory Setting	4
Valid Entries	1 to 7
Inspect	No
Copy Option	No
Console Procedure	`Operator`→`Queued Call`→`Call Types`→Select call type →`Priority`→**Drop**→Dial priority level→`Enter`→`Exit`→ `Exit`→`Exit`→`Exit`
PC Procedure	[F3]→[F2]→[F7]→Select call type→[F1]→[Alt] + [P]→Type priority level→[F10]→[F5]→[F5]→[F5]→[F5]

Procedure: Call Type Queue Priority Level

	Console Display/Instructions	Additional Information	PC
1	**Select the Operator menu.**		
	System Programming: > Make a selection System Extensions SysRenumber Options Operator Tables LinesTrunks AuxEquip Exit NightSrvce		F3
2	**Select Queued Call.**		
	System Operator: Make a selection Positions Queued Call Hold Timer DLC Hold Exit		F2
3	**Select Call Types.**		
	Queued Call Operator: > Make a selection Hold Rtrn InQue Alert HoldRelease Call Types Threshold Msg Center ElvatePrior ExtndComplt Exit Return Ring		F7
4	**Select a call type.**		
	Call Type: Make a selection Dial 0 QCC Ext Follow/Frwd Returning UnassignDID GrpCoverage ListedNumbr Exit	If you select `Follow/Frwd` or `QCC Ext`, go to Step 8. Press the button or function key next to your selection.	
5	**Select Priority.**		
	**** Calls: Make a selection Priority Operator Exit	**** = option name selected in Step 4 If you did not select `Group Coverage`, go to Step 8.	F1

	Console Display/Instructions	Additional Information	PC
6	**Enter a coverage group number (*nn* = 1 to 30).**		

	`Group Coverage Calls:`
	`Enter coverage group`
	`(1-30) queue is receiver`
	
	`Backspace`
	`Exit  Enter`
		Dial or type [*nn*].	

7	**Save your entry.**		
	Select **Enter**.		F10
8	**Erase the current priority level (*x*).**		

	`**** Priority:`
	`Enter queue priority`
	`(1-7)`
	`x`
	
	`Backspace`
	`Exit  Enter`
		**** = option name selected in Step 4
		
		Press **Drop**.
			Alt+P

9	**Enter a queue priority level (*n* = 1 to 7).**		
		Dial or type [*n*].	
10	**Save your entry.**		
	Select **Enter**.		F10
11	**Return to the System Programming menu.**		
	Select **Exit** four times.		F5 F5 F5 F5

Message Center Operation

Use this procedure to designate one or more QCC operator positions to operate as a message center. The following options are automatically set for the message center position:

- Incoming calls are not directed to this position.
- Returning calls are directed to this position (return from extending and operator parked calls).
- All group coverage calls are directed to this position.
- All DID calls to invalid destinations are directed to this position.

Designating message center operation does not change any call type option programming, except that the call types mentioned above are added to the calls received at the QCC Message Center.

Summary: Message Center Operation

Programmable by	System manager
Mode	Hybrid/PBX
Idle Condition	Not required
Planning Form	Form 6a, Optional Operator Features
Factory Setting	Not applicable
Valid Entries	QCC extension numbers
Inspect	Yes
Copy Option	No
Console Procedure	Operator→Queued Call→Msg Center→Dial ext. no.→Enter→Exit→Exit→Exit
PC Procedure	F3→F2→F8→Type ext. no.→F5→F5→F5

Procedure: Message Center Operation

	Console Display/Instructions	Additional Information	PC
1	**Select the Operator menu.**		
	System Programming: > Make a selection System Extensions SysRenumber Options Operator Tables LinesTrunks AuxEquip Exit NightSrvce		F3
2	**Select Queued Call.**		
	System Operator: Make a selection Positions Queued Call Hold Timer DLC Hold Exit		F2
3	**Select Message Center.**		
	Queued Call Operator: >> Make a selection Hold Rtrn InQue Alert HoldRelease Call Types Threshold Msg Center ElvatePrior ExtndComplt Exit Return Ring		F8

	Console Display/Instructions	Additional Information	PC
4	**Specify the QCC operator extension.**		

	`Operator Message Center:`
	`Enter QCC operator`
	`extension number`
	
	`Delete`
	`Backspace`
	`Exit  Enter`
		If no DSS is attached:
		SP: "Entering an Extension"
		
		If DSS is attached:
		Toggle the red LED on or off as required.
		On = extension is message center position.
		Flashing = extension is not message center position.
		Off = extension is not an operator position.	

5	**Assign or remove the extension as a message center.**		
	Select **Enter** or **Delete**.	You may continue to assign or remove extensions as a message center by repeating Steps 4 and 5.	F8 F10
6	**Return to the System Programming menu.**		
	Select **Exit** three times.		F5 F5 F5

Extended (Directed) Call Completion

Use this procedure to specify one of the two basic options shown below for QCC operator positions with a DSS only:

- **Automatic Completion**. Allows one-touch call transfer; that is, calls are transferred by touching only an extension button on the DSS. The operator does not have to press the **Release** button.
- **Manual Completion**. QCC operators must press the **Release** button to direct a call using a DSS.

This option cannot be programmed for individual QCC operator positions. The setting applies to all QCC operator positions.

Summary: Extended (Directed) Call Completion

Programmable by	System manager
Mode	Hybrid/PBX
Idle Condition	Not required
Planning Form	Form 6a, Optional Operator Features
Factory Setting	Automatic Extended Completion

Valid Entries	Automatic, Manual
Inspect	No
Copy Option	No
Console Procedure	Operator→Queued Call→ExtndComplt→Automatic Complete or Manual Complete→Enter→Exit→Exit
PC Procedure	F3 → F2 → F9 → F1 or F2 → F10 → F5 → F5

Procedure: Extended (Directed) Call Completion

	Console Display/Instructions	Additional Information	PC
1	**Select the Operator menu.**		
	System Programming: > Make a selection System Extensions SysRenumber Options Operator Tables LinesTrunks AuxEquip Exit NightSrvce		F3
2	**Select Queued Call.**		
	System Operator: Make a selection Positions Queued Call Hold Timer DLC Hold Exit		F2
3	**Select Extended Completion.**		
	Queued Call Operator: >> Make a selection Hold Rtrn InQue Alert HoldRelease Call Types Threshold Msg Center ElvatePrior ExtndComplt Exit Return Ring		F9
4	**Specify automatic call extension or require the operator to extend calls manually.**		
	QCC Extend Completion: Select one Automatic Complete Manual Complete Exit Enter	Select Automatic Complete or Manual Complete.	F1 F2

	Console Display/Instructions	Additional Information	PC
5	**Save your entry.**		
	Select `Enter`.		F10
6	**Return to the System Programming menu.**		
	Select `Exit` two times.		F5 F5

Return Ring

Use this procedure to specify the number of rings before an unanswered directed call is returned to the QCC queue or QCC Message Center position.

This option cannot be programmed for individual QCC operator positions. The setting applies to all QCC operator positions.

NOTE:
If you want unanswered calls to proceed to voice mail, lengthen the return ring setting.

Summary: Return Ring

Programmable by	System manager
Mode	Hybrid/PBX
Idle Condition	Not required
Planning Form	Form 6a, Optional Operator Features
Factory Setting	4 rings
Valid Entries	1 to 15 rings
Inspect	No
Copy Option	No
Console Procedure	`Operator`→`Queued Call`→`Return Ring`→**Drop**→Dial no. of rings→`Enter`→`Exit`→`Exit`
PC Procedure	F3→F2→F10→Alt + P→Type no. of rings→F10→F5→F5

Procedure: Return Ring

	Console Display/Instructions	Additional Information	PC
1	**Select the Operator menu.**		
	System Programming: > Make a selection System Extensions SysRenumber Options Operator Tables LinesTrunks AuxEquip Exit NightSrvce		F3
2	**Select Queued Call.**		
	System Operator: Make a selection Positions Queued Call Hold Timer DLC Hold Exit		F2
3	**Select Return Ring.**		
	Queued Call Operator: Make a selection Hold Rtrn InQue Alert HoldRelease Call Types Threshold Msg Center ElvatePrior ExtndComplt Exit Return Ring		F10
4	**Erase the current number of rings (*xx*).**		
	Queued Call Return Ring: Enter number rings before return (1-15) *xx* Backspace Exit Enter	Press **Drop**.	Alt + P
5	**Enter the number of rings before the directed call returns to the QCC queue (*nn* = 1 to 15).**		
		Dial or type [*nn*].	
6	**Save your entry.**		
	Select **Enter**.		F10
7	**Return to the System Programming menu.**		
	Select **Exit** two times.		F5 F5

Position Busy Backup

Use this procedure to designate or remove the calling group to provide the backup position for the QCC queue. The specified calling group will receive incoming calls when all QCC operator positions are in position-busy mode.

Position Busy Backup is programmed for the QCC queue rather than for individual QCC operator positions. The calling group designated as the QCC queue backup serves as the backup for the Remote Access feature and as backup when the QCC is being used as the system programming console.

Only one Position Busy Backup can be programmed per system.

Summary: Position Busy Backup

Programmable by	System manager
Mode	Hybrid/PBX
Idle Condition	Not required
Planning Form	Form 6a, Optional Operator Features
Factory Setting	No backup
Valid Entries	Calling group number
Inspect	No
Copy Option	No
Console Procedure	Operator→Queued Call→**More**→QCC Backup→**Drop**→ Dial ext. number→Enter or Delete→Exit→Exit
PC Procedure	F3→F2→PgUp→F1→Alt + P→Type ext. number→ F10 or F8→F5→F5

Procedure: Position Busy Backup

	Console Display/Instructions	Additional Information	PC
1	**Select the Operator menu.**		
	System Programming: > Make a selection System Extensions SysRenumber Options Operator Tables LinesTrunks AuxEquip Exit NightSrvce		F3

	Console Display/Instructions	Additional Information	PC
2	**Select Queued Call.**		
	System Operator: Make a selection Positions Queued Call Hold Timer DLC Hold Exit		F2
3	**Go to the second screen of the Queued Call Operator menu.**		
	Queued Call Operator: > Make a selection Hold Rtrn InQue Alert HoldRelease Call Types Threshold Msg Center ElvatePrior ExtndComplt Exit Return Ring	Press **More**.	PgUp
4	**Select QCC Backup.**		
	Queued Call Operator: Make a selection QCC Backup Voice Annc Exit		F1
5	**Erase the current QCC operator backup number (*xxxx*).**		
	QCC Operator Backup: Enter QCC operator of Calling Group *xxxx* Delete Backspace Exit Enter	Press **Drop**.	Alt + P
6	**Specify the calling group that will provide QCC operator backup.**		
	QCC Operator Backup: Enter QCC operator of Calling Group Delete Backspace Exit Enter	**SP:** “Entering an Extension”	

	Console Display/Instructions	Additional Information	PC
7	**Assign or remove the group as QCC operator backup.**		
	Select Enter or Delete.		F10 F8
		You may continue to assign or remove calling groups as QCC operator backups by repeating Steps 2 and 3.	
8	**Return to the System Programming menu.**		
	Select Exit two times.		F5 F5

QCC Voice Announce

Use this procedure to enable or disable Voice Announce for the Queued Call Consoles. This feature is only available in Release 4.0 and later.

When QCC Voice Announce is enabled, every QCC in the system has one Voice Announce **Call** button, the **Call 5 Voice** button. All Intercom calls that originate from a QCC **Call 5 Voice** button are delivered as Voice Announce calls.

When QCC Voice Announce is disabled, all Intercom calls originating at the QCC **Call** buttons are Intercom Ringing calls.

Summary: Voice Announce

Programmable by	System manager
Mode	Hybrid/PBX
Idle Condition	Not required
Planning Form	Form 6a, Optional Operator Features
Factory Setting	Disabled
Valid Entries	Disabled, Enabled
Inspect	No
Copy Option	No
Console Procedure	Operator→Queued Call→**More**→Voice Annc→Enabled or Disabled→Enter→Exit→Exit
PC Procedure	F3→F2→PgUp→F2→F1 or F2→F10→F5→F5

Procedure: Voice Announce

	Console Display/Instructions	Additional Information	PC
1	**Select the Operator menu.**		
	System Programming: > Make a selection System Extensions SysRenumber Options Operator Tables LinesTrunks AuxEquip Exit NightSrvce		F3
2	**Select Queued Call.**		
	System Operator: Make a selection Positions Queued Call Hold Timer DLC Hold Exit		F2
3	**Go to the second screen of the Queued Call Operator menu.**		
	Queued Call Operator: >> Make a selection Hold Rtrn InQue Alert HoldRelease Call Types Threshold Msg Center ElvatePrior ExtndComplt Exit Return Ring	Press **More**.	PgUp
4	**Select Voice Announce.**		
	Queued Call Operator: Make a selection QCC Backup Voice Annc Exit		F2
5	**Specify whether to enable or disable Voice Announce.**		
	QCC Voice Announce: Select one Enabled Disabled Exit Enter	Select Enabled or Disabled.	F1 F2

	Console Display/Instructions	Additional Information	PC
7	**Save your entry.**		
	Select `Enter`		F10
8	**Return to the System Programming menu.**		
	Select `Exit` two times.		F5 F5

Telephones

This section contains the following procedures:

- Assigning outside lines or trunks to the buttons on a telephone (including lines and trunks used for loudspeaker paging).
- Copying line button assignments from one telephone to an individual telephone or block of telephones.
- Assigning the following buttons on telephones (for Hybrid/PBX systems only):
  - System Access or Intercom Voice
  - System Access or Intercom Ring
  - System Access or Intercom Originate Only
  - Shared System or Intercom Access
- Identifying analog multiline telephones that do not have built-in speakerphones (BIS) or Hands Free Answer on Intercom (HFAI) capability.
- Identifying analog multiline telephones that require pairing of extension jacks to provide the Voice Announce to Busy, or to provide voice and data features.

Assign Trunks or Pools to Telephones

Use this procedure to assign outside lines/trunks (connected to the control unit) to specific buttons on each telephone. The lines/trunks assigned to a button on a telephone are called *personal lines*.

This procedure is used only to change or add personal lines, Loudspeaker Paging, or **Pool** buttons (Hybrid/PBX only) to telephones. See “Assign Intercom or System Access Button” procedures to add or change Intercom (**Icom**) or System Access (**SA**) buttons.

Individual lines/trunks can be assigned to a maximum of 64 telephones. Individual pools can be assigned as a **Pool** button on a maximum of 64 telephones.

The following lines/trunks cannot be assigned to a button on a telephone:

- Lines/trunks used for Music On Hold
- Lines/trunks used for maintenance alarms

NOTE:
If you use equipment that rebroadcasts music or other copyrighted materials, you may be required to obtain a copyright license from and pay license fees to a third party (such as the American Society of Composers, Artists, and Producers or Broadcast Music Incorporated). Magic on Hold® requires no such license and can be purchased from AT&T.

Pool buttons cannot be assigned or removed from extensions unless the pool has trunks assigned. If all trunks are to be removed from a pool, all **Pool** button assignments must first be removed from telephones. Another way of handling this situation is to program another trunk into the pool and then remove the **Pool** button assignments from the extensions.

- **Hybrid/PBX only.** Individual lines/trunks assigned to a pool can be assigned to a button only on a DLC operator position. If one of the lines/trunks in a pool is assigned to a button on a non-DLC telephone, the result is a **Pool** button assignment.
- **Key only.** The system assigns the first eight line numbers to buttons on multiline telephones whether or not an outside line is physically connected. If a line is not connected, the button assignment must be removed so the user can assign a feature to the button.

  For the MDC 9000 and MLC 5 cordless multiline telephones and the MDW 9000 wireless multiline telephone, the system assigns the first eight lines connected to the control unit even though the telephone has fewer than eight buttons available. Remove the extra lines in system programming so that the appropriate number of lines are assigned to buttons on these telephones.

Lines and trunks are assigned to buttons in the order in which you press each line button on the system programming console or keyboard. Existing line assignments can be rearranged by removing all current assignments and then pressing the line buttons on the console or keyboard in the order that they should appear on the buttons. For information on the order of the programmed buttons, refer to the button numbers on the applicable planning form for each telephone.

If you want to reserve some blank buttons for features between line buttons, a line must be assigned as a placeholder for each blank button. After all lines are assigned, remove the lines used as placeholders on the buttons reserved for features.

Summary: Assign Trunks or Pools to Telephones

Programmable by	System manager
Mode	All, but note differences in factory settings.
Idle Condition	Telephone idle
Planning Form	Form 4b, Analog Multiline Telephone Form 4d, MLX Telephone Form 4e, MFM Adjunct: MLX Telephone Form 4f, Tip/Ring Equipment Form 5a, Direct-Line Console (DLC): Analog Form 5b, Direct-Line Console (DLC): Digital Form 5c, MFM Adjunct: DLC Data Form 1a, Modem Data Station Data Form 1b, 7500B Data Station
Factory Setting	**Key Mode.** An Intercom Ring (**ICOM Ring**) button, an Intercom Voice (**ICOM Voice**) button, and the first eight lines connected to the control unit are assigned to all analog multiline telephones, MLX telephones (excluding operator positions), and MFMs connected to MLX telephones. Two Intercom Ring buttons are assigned to single-line telephones; no outside lines are assigned. **Behind Switch Mode.** Intercom Ring, Intercom Voice, and prime line buttons are assigned to all analog multiline telephones, MLX telephones (excluding operator positions), and MFMs connected to MLX telephones. Two Intercom Ring buttons are assigned to single-line telephones; no outside lines are assigned. When prime lines are assigned to MLX extensions, lines are not assigned to MFMs used to connect adjuncts. Lines for MFMs must be assigned separately. **Hybrid/PBX Mode.** System Access Ring (**SA Ring**), System Access Voice (**SA Voice**), and System Access Originate Only (**SA Orig Only**) buttons are assigned to all analog multiline telephones and MLX telephones (excluding operator positions). Five **Call** buttons are assigned to QCC operator positions. Two System Access Ring buttons and one System Access Originate Only button are assigned to single-line telephones. No personal line or Pool buttons are assigned.
Valid Entries	Extension numbers
Inspect	Yes
Copy Option	Yes

Console Procedure	To program a single line/trunk: Extensions→Lines/Trunks→Dial ext. no.→Enter→ Entry Mode→Dial line/trunk no.→Enter→Exit→Exit To program a block of lines/trunks: Extensions→Lines/Trunks→Dial ext. no.→Enter→ Select trunk range→Toggle LED On/Off→Enter→Exit→ Exit
PC Procedure	To program a single line/trunk: F6→F1→Type ext. no.→F10→F6→Type line/trunk no. →F10→F5→F5 To program a block of lines/trunks: F6→F1→Type ext. no.→F10→Select trunk range→ Toggle letter G On/Off→F10→F5→F5

Procedure: Assign Trunks or Pools to Telephones

	Console Display/Instructions	Additional Information	PC
1	**Select the Extensions Menu.**		
	System Programming: > Make a selection System Extensions SysRenumber Options Operator Tables LinesTrunks AuxEquip Exit NightSrvce		F6
2	**Select Lines and Trunks.**		
	Extensions: > Make a selection LinesTrunks Restrct Copy Line Copy Account Dial Outcd BIS/HFAI Restriction Call Pickup Exit VoiceSignl		F1
3	**Specify the extension.**		
	Assign Lines/Trunks: Enter extension Backspace Exit Enter	**If no DSS is attached**: **SP:** "Entering an Extension" **If DSS is attached**: Toggle the red LED on or off as required. Go to Step 5. On = extension is assigned to trunk or pool. Off = extension is not assigned to trunk or pool.	

	Console Display/Instructions	Additional Information	PC
4	**Save your entry.**		
	Select **Enter**.		F10
		If you get the Station Busy message, wait for an idle condition or exit system programming and try again later.	
5	**Assign the extension.**	● ◆	

	`Extension xxxx:`
	`Assign lines/trunks`
	`Lines 01-20  Entry Mode`
	`Lines 21-40`
	`Lines 41-60`
	`Lines 61-80`
	`Exit`
		xxxx = extension number entered in Step 3
		
		For a single line/trunk, go to
		● Single Line/Trunk Procedure.
		
		For a block of lines, go to
		◆ Block Procedure.	

● Single Line/Trunk Procedure

1	**Specify entry mode.**		
	Select **Entry Mode**.		F6
2	**Enter the line or trunk number.**		

	`Extension xxxx:`
	`Enter line/trunk numbers`
	
	`Delete`
	`Backspace  Next`
	`Exit  Enter`
		xxxx = extension number entered in Step 3
		
		Dial or type [*nnn*].	

3	**Assign or remove the specified line/trunk number.**		
	Select **Enter** or **Delete**.		F10 F8
		You may continue to assign or remove lines/trunks by repeating Steps 2 and 3.	
4	**Assign a single line/trunk to the next extension or go to Step 5.**		
	Select **Next**		F9
		Return to Step 2 to continue programming. The next extension will be displayed on Line 1.	
5	**Return to the System Programming menu.**		
	Select **Exit** two times.		F5 F5

◆ Block Procedure

	Console Display/Instructions	Additional Information	PC
1	**Specify the block of 20 lines associated with 20 buttons on the system programming console.**		
	Select Lines 01-20 Lines 21-40 Lines 41-60 Lines 61-80.		 F1 F2 F3 F4
2	**Assign or remove the line/trunk to or from the line button.**		
		Toggle the green LEDs next to each line button on or off as required. On = line/trunk or pool assigned to extension. Off = line/trunk or pool not assigned to extension. **For Hybrid/PBX only:** The red LED indicates: On = trunk assigned to pool. Off = trunk not assigned to pool.	
3	**Save your entry.**		
	Select Enter.		F10
4	**Return to the System Programming menu.**		
	Select Exit two times.		F5 F5

Copy Line/Trunk Assignments

Use this procedure to copy outside line/trunk button assignments, pool dial-out code restrictions (Hybrid/PBX only), and (for operator positions only) Night Service information from one extension to another extension or block of extensions with identical requirements.

If you are copying assignments to a block of extensions and one of the extensions in the block is in use, the display shows the Station Busy - Pls Wait message. Copying for the rest of the extensions in the block is delayed until the busy extension becomes idle. The number of the busy extension is not shown. If a DSS is attached, the LED associated with the busy extension is on. If you exit instead of waiting for the busy extension to become idle, copying for the rest of the extensions is canceled; however, the assignments that have already been copied are not canceled.

If you are copying assignments from an operator position to a block of extensions that includes both operator and nonoperator extensions, the information is copied only to the operator positions; the nonoperator positions are not affected. Similarly, if you are copying assignments from a nonoperator position to a block of extensions that includes both operator and nonoperator extensions, the information is copied only to the nonoperator positions; the operator positions are not affected. The system does not provide an error tone to signal that the copy did not work for all of the extensions in the block.

Summary: Copy Line/Trunk Assignments

Programmable by	System Manager
Mode	All
Idle Condition	Telephone idle
Planning Form	4a, Extension Copy: Analog Multiline Telephone Template 4c, Extension Copy: MLX Telephone Template
Factory Setting	Not applicable
Valid Entries	Not applicable
Inspect	Yes: lines/pools assigned to an extension.
Copy Option	Not applicable

Console Procedure	To copy to a single extension:
	`Extensions`→`Line Copy`→`Single`→Dial copy from ext. no. →`Enter`→Dial copy to ext. no.→`Enter`→`Exit`→`Exit`
	To copy to a block of extensions:
	`Extensions`→`Line Copy`→`Block`→Dial copy from ext. no. →`Enter`→Dial ext. no of first telephone in block→`Enter`→ Dial ext. no of last telephone in block→`Enter`→`Exit`→ `Exit`

PC Procedure	To copy to a single extension: [F6]→[F2]→[F1]→Type copy from ext. no.→[F10]→Type copy to ext. no.→[F10]→[F5]→[F5] To copy to a block of extensions: [F6]→[F2]→[F2]→Type copy from ext. no.→[F10]→Type ext. no. of first telephone in block→[F10]→Type ext. no. of last telephone in block→[F10]→[F5]→[F5]

Procedure: Copy Line and Trunk Assignments

	Console Display/Instructions	Additional Information	PC
1	**Select the Extensions menu.**		
	System Programming: > Make a selection System Extensions SysRenumber Options Operator Tables LinesTrunks AuxEquip Exit NightSrvce		F6
2	**Select Line Copy.**		
	Extensions: > Make a selection LinesTrunks Restrct Copy Line Copy Account Dial Outcd BIS/HFAI Restriction Call Pickup Exit VoiceSignl		F2
3	**Copy the line assignments to individual extensions or to a block of extensions.**	● ◆	
	Copy Lines: Make a selection Single Block Exit	To copy to a block of extensions, they must be connected to sequentially numbered extension jacks (for example, logical IDs 11, 12, 13 and so on). To copy line assignments to a single extension, select **Single** and go to ● Single Extension Procedure. To copy line assignments to a block of extensions, select **Block** and go to ◆ Block Procedure.	F1 F2

● Single Extension Procedure

1	**Specify the extension you want to copy from.**		
	Copy Lines: Enter extension to copy from Backspace Exit Enter	**SP:** “Entering an Extension”	

	Console Display/Instructions	Additional Information	PC
2	**Save your entry.**		
	Select **Enter**.		F10
3	**Specify the extension to copy assignments to.**		

	`Copy extension xxxx to:`
	`Enter extension`
	
	`Backspace  Next`
	`Exit  Enter`
		xxxx = extension entered in Step 1.
		
		SP: "Entering an Extension"	

4	**Save your entry . Continue to copy line assignments or go to Step 5.**		
	Select **Enter** OR Select **Next**	After selecting **Enter**, you may continue to copy line assignments from the extension currently displayed on Line 1 to additional extensions. After selecting **Next**, you may copy line assignments from the next sequential extension. Select **Enter** (F10) after completing programming. Return to Step 3 to continue programming. The extension to be copied from will be displayed on Line 1.	F10 F9
5	**Return to the System Programming menu.**		
	Select **Exit** two times.		F5 F5

◆ Block Procedure

1	**Specify the extension you want to copy from.**		

	`Copy Lines:`
	`Enter extension to copy from`
	
	`Backspace`
	`Exit  Enter`
		SP: "Entering an Extension"	

2	**Save your entry.**		
	Select **Enter**.		F10

	Console Display/Instructions	Additional Information	PC
3	**Enter the logical ID of the first extension number in the block to be copied to.**		

	`Copy extension xxxx`
	`Enter starting extension`
	`logical id (#1 - #200)`
	
	`Backspace`
	`Exit Enter`
		xxxx = extension entered in Step 4 of the main procedure
		
		Dial or type #[*nnn*].	

4	**Save your entry.**		
	Select **Enter**.		F10
5	**Enter the logical ID of the last extension number in the block to be copied to.**		

	`Start at extension xxxx`
	`Enter ending extension`
	`logical id (#1 - #200)`
	
	`Backspace`
	`Exit Enter`
		xxxx = extension number of logical id entered in Step 1
		
		Dial or type #[*nnn*].	

6	**Save your entry.**		
	Select **Enter**.		F10
7	**Return to the System Programming menu.**		
	Select **Exit** two times.		F5 F5

Assign Intercom or System Access Buttons

Use this procedure to assign or change the assignments for Intercom (**ICOM**) buttons used to make and receive inside calls. This includes the following types of Intercom buttons:

- Ring
- Voice
- Originate Only (Ring or Voice)

In Hybrid/PBX mode only, use this procedure to assign or change assignments for System Access (**SA**) buttons used to make or receive inside and outside calls. This procedure includes the following types of System Access buttons:

- Ring
- Voice
- Originate Only (Ring or Voice)
- Shared (Ring or Voice)

NOTES:

1. You cannot change the factory setting for **Call** buttons assigned to QCC operator positions, and you cannot assign Ring, Voice, Originate Only, or Shared buttons to QCC operator positions. In Release 4.0 and later, The **CAll 5** (Ring/Voice) button on a QCC can be programmed for Voice Announce.
2. System Access or Intercom buttons can be assigned only to the first 10 buttons on a telephone.
3. You can assign a combination of up to 10 System Access or Intercom buttons to each telephone (excluding QCC operator positions).
4. You can remove System Access or Intercom buttons, but at least one must remain on the telephone.

   NOTE:
   When single-line sets are programmed with only one System Access or Intercom button, the Transfer, Conference and Drop features are disabled. Other features that require a second dial tone, such as Account Code/Number Entry, After Call Work States, Call Pickup, Call Waiting and Privacy, are also affected. For more information, see the *Feature Reference* manual.

5. Each System Access Ring or Voice on an individual telephone can be assigned as a Shared System Access (**SSA**) button on up to 16 other telephones.

   NOTE:
   Shared SA buttons cannot be assigned to single-line telephones or other tip/ring equipment connected to an 016, 012, or 008 OPT module. **Shared SA** buttons can be assigned to a tip/ring or external alert device connected to an MFM in an MLX telephone or a GPA connect to an analog multiline telephone. **Shared SA** buttons cannot be assigned when the corresponding **SA** button is on a single-line set.

   Release 3.0 and later
   Each System Access Ring or Voice on an individual telephone can be assigned as a Shared System Access (SSA) button on up to 27 other telephones.

6. System Access and Intercom buttons are centrally programmed and cannot be programmed by individual telephone users.

Summary: Assign Intercom or System Access Buttons

Programmable by	System Manager
Mode	All, but note differences in factory settings.
Idle Condition	Telephone idle

Planning Form	Form 4b, Analog Multiline Telephone Form 4d, MLX Telephone Form 4e, MFM Adjuncts: MLX Telephone Form 4f, Tip/Ring Equipment Form 5a, Direct-Line Console (DLC): Analog Form 5b, Direct-Line Console (DLC): Digital Form 5c, MFM Adjunct (DLC) Data Form 1a, Modem Data Station Data Form 1b, 7500B Data Station
Factory Setting	**Key Mode.** An Intercom Ring (**ICOM Ring**), an Intercom Voice (**ICOM Voice**), and the first eight lines connected to the system are assigned to all analog multiline and MLX telephones, excluding operator positions. Two Intercom Ring buttons are assigned to tip/ring equipment connected on an 012 or 016 module. An Intercom Ring and an Intercom Originate Only (**ICOM Orig Only**) button are assigned to tip/ring equipment connected by an MFM. No outside lines are assigned. **Behind Switch Mode.** An Intercom Ring, an Intercom Voice, and a prime line button are assigned to all analog multiline and MLX telephones, excluding operator positions. Two Intercom Ring buttons and a prime line button are assigned to tip/ring equipment connected to an 012 module. An Intercom Ring and an Intercom Originate Only Ring button are assigned to tip/ring equipment connected by an MFM. No outside lines are assigned. **Hybrid/PBX Mode.** System Access Ring (**SA Ring**), System Access Voice (**SA Voice**), and System Access Originate Only Ring (**SA Orig Only**) buttons are assigned to all analog multiline and MLX telephones, excluding operator positions. Two System Access Ring buttons and a System Access Originate Only Ring button are assigned to tip/ring equipment (for example, single-line telephones or fax machines connected to an 012 module). No personal line or pool buttons are assigned. **All Modes.** System Access Ring (Hybrid/PBX mode) or Intercom Ring (Key and Behind Switch modes), System Access Voice (Hybrid/PBX mode) or Intercom Voice (Key and Behind Switch modes), and the first 18 through 29 lines connected to the control unit are assigned to all DLC operator positions. The number of lines assigned depends on the type of telephone used as a DLC operator position. Refer to the appropriate telephone planning form for details.
Valid Entries	Not applicable
Inspect	Yes: specific button options.

Copy Option	Yes (You can copy additional **SA** buttons to another extension, but you cannot overwrite **SA** buttons that are already assigned.)
Console Procedure	To program extension: **More**→Cntr-Prg→Program Ext.→Dial ext. no.→Enter →Start→Program extension→Enter→Exit→Exit To copy extension programming: **More**→Cntr-Prg→Copy ext.→Dial copy from ext. no.→ Enter→Dial copy to ext. no.→Enter→Exit→Exit
PC Procedure	To program extension: PgUp→F4→F1→Type ext. no.→F10→Program extension→F10→F5→F5 To copy extension programming: PgUp→F4→F2→Type copy from ext. no.→F10→Type copy to ext no.→F10→F5→F5

Procedure: Assign Intercom or System Access Buttons

	Console Display/Instructions	Additional Information	PC
1	**Go to the second screen of the System Programming menu.**		
	System Programming > Make a selection System Extensions SysRenumber Options Operator Tables LinesTrunks AuxEquip Exit NightSrvce	Press **More**.	PgUp
2	**Select Centralized Telephone Programming.**		
	System Programming: Make a selection Labeling Language Data Print Cntr-Prg Exit		F4

	Console Display/Instructions	Additional Information	PC
3	**Select an extension option.**	● ◆	

	`Centralized Programming:`
	`Make a selection`
	`Program Ext`
	`Copy Ext`
	
	`Exit`
		Select `Program Ext` and go to
		● Program Extensions Procedure.
		
		Select `Copy Ext` and go to
		◆ Copy Extension Procedure.
			F1
			
			F2

● Program Extensions Procedure

Although you can make selections from the screen (with the `ListFeature` option) to assign Ring and Voice buttons, the following procedure provides the programming codes to perform these functions. Using the codes speeds the button assignment process.

When you enter the programming code for assigning a Ring button, the screen in Step 6 of the following procedure changes to the first List Feature screen, then returns to the screen shown in Step 6.

Table 3–2 provides the programming codes for assigning Ring and Voice buttons. You can handle errors in data entry as follows:

- If you enter a feature code incorrectly while programming, the display shows the `Programming Error` message and the red LED next to the button flashes. If this happens, press the button again and repeat the procedure.
- If you make a mistake and program the wrong feature on a button, press the button, select `Delete` (F1 on the PC), and press the button again.

Table 3–2. Programming Codes for Assigning SA/ICOM Ring and Voice Buttons

Use	On the Console	On the PC
To assign System Access or Intercom Ring button	Dial *16	Type *16
To assign System Access or Intercom Voice button	Dial *16, press button being programmed again, and dial *19	Type *16, press Shift + function key for button being programmed again, and type *19
To assign System Access or Intercom Originate Only - Ring button	Dial *18	Type *18
To assign System Access or Intercom Originate Only - Voice button	Dial *18, press button being programmed again, and dial *19	Type *18, press Shift + function key for button being programmed again, and type *19
To assign Shared System Access button	Dial *17, press the extension number of principal telephone [nnnn] then press the button number being shared [nn]	Type *17, press the extension number of principal telephone [nnnn] then press the button number of specific button being shared [nn]
To change current assignment for System Access or Intercom Voice, Originate Only or Shared System Access buttons from Voice to Ring	Dial **19	Type **19

	Console Display/Instructions	Additional Information	PC
1	**Specify an extension.**		
	Centralized Programming: Enter extension Backspace Exit Enter	**SP:** “Entering an Extension”	
2	**Save your entry.**		
	Select **Enter**.		F10
3	**Select Start.**		
	Extension Program *xx* Press HOME to exit Sys Program Start	*xx* = extension entered in Step 1	F10
4	**Select the line buttons associated with the 20 line buttons on the system programming console or PC.**		
	Select Button: Extension Program *xx* Page 1 Page 2 Sys Program	*xx* = number entered in Step 1 To select buttons 1 to 20, select **Page 1**. To select buttons 21 to 34, select **Page 2**.	 F6 F7
5	**Select the button you want to program.**		
		Press the button or function key next to your selection.	
6	**Enter the programming code for voice or ring button.**		
	**** Press HOME to Exit Delete Page 1 Page 2 Sys Program ListFeature	**** = contents of button selected in Step 5 (Voice, Ring, or blank) See Table 3–4.	

	Console Display/Instructions	Additional Information	PC
7	**Assign a voice or ring attribute.**		
		To assign the voice attribute to the Ring button, select the same button and enter the programming code for voice (see Table 3–4). To assign Voice buttons, first assign the button as a Ring button, then program the button with the voice attribute (see Table 3–4).	
8	**Repeat Step 6 to program another button for the extension entered in Step 1 or go to Step 9.**		
9	**Save your entry.**		
	Select **Enter**.		F10
10	**Return to the System Programming menu.**		
	Select **Exit** two times.		F5 F5

◆ Copy Extension Procedure

	Console Display/Instructions	Additional Information	PC
1	**Enter the extension to copy from.**		

	`Extension Program Copy`
	`Enter extension to copy from`
	
	`Backspace`
	`Exit  Enter`
		SP: "Entering an Extension"	

2	**Save your entry.**		
	Select **Enter**.		F10
3	**Enter the extension to copy to.**		

	`Copy Extension xxxx to:`
	`Enter extension`
	
	`Backspace  Next`
	`Exit  Enter`
		xxxx = extension entered in Step 1
		
		SP: "Entering an Extension"	

	Console Display/Instructions	Additional Information	PC
4	**Save your entry. Then, continue to copy button assignments or go to Step 5.**		
	Select Enter or Select Next		F10 F9
		After selecting Enter, you may continue to copy button assignments from the extension displayed on Line 1 to additional extensions. After selecting Next, you may copy button assignments from the next sequential extension. Return to Step 3 to continue programming. The extension to be copied from will be displayed on Line 1.	
6	**Return to the System Programming menu.**		
	Select Exit two times.		F5 F5

Analog Multiline Telephone Without Built-in Speakerphone (BIS) or Hands Free Answer Intercom (HFAI) Capability

Use this procedure to identify analog multiline telephones with flat membrane buttons that do not have built-in speakerphones (BIS) or Hands Free Answer Intercom (HFAI) capability. The models that must be identified are 5-Button, 10-Button, 34-Button, and 34-Button Deluxe analog multiline models with flat membrane buttons.

Keep the factory setting for analog multiline models with raised plastic buttons, including the following models: 10-Button HFAI, 34-Button with speakerphone (SP-34), 34-Button with speakerphone and display (SP-34D), BIS-10, BIS-22, BIS-34, BIS-22D, and BIS-34D.

This procedure is not necessary for MLX or single-line telephones.

Summary: Analog Multiline Telephones Without BIS or HFAI Capability

Programmable by	System Manager
Mode	All
Idle Condition	Not required
Planning Form	Form 4b, Analog Multiline Telephone Form 5a, Direct-Line Console (DLC): Analog Data Form 1a, Modem Data Stations
Factory Setting	All models of analog multiline telephones (except the analog multiline display console) have BIS/HFAI capability.
Valid Entries	Extension numbers
Inspect	Yes
Copy Option	No
Console Procedure	`Extensions`→`BIS/HFAI`→Dial ext. no.→`Enter`→`Exit`→`Exit`
PC Procedure	[F6]→[F8]→Type ext. no.→[F10]→[F5]→[F5]

Procedure: Analog Multiline Telephones Without BIS or HFAI Capability

	Console Display/Instructions	Additional Information	PC
1	**Select the Extensions menu.**		

	`System Programming: >`
	`Make a selection`
	`System  Extensions`
	`SysRenumber  Options`
	`Operator  Tables`
	`LinesTrunks  AuxEquip`
	`Exit  NightSrvce`
			[F6]

2	**Select BIS/HFAI.**		

	`Extensions: >`
	`Make a selection`
	`LinesTrunks  RestrctCopy`
	`Line Copy  Account`
	`Dial Outcd  BIS/HFAI`
	`Restriction  Call Pickup`
	`Exit  VoiceSignl`
			[F8]

	Console Display/Instructions	Additional Information	PC
3	**Specify the extension.**		
	BIS/HFAI Extensions: Enter extensions Delete Backspace Exit Enter	**If no DSS is attached**: **SP:** "Entering an Extension" **If DSS is attached**: Toggle the red LED on or off as required. Go to Step 5. On = telephone has BIS/HFAI capability. Off = telephone does not have BIS/HFAI capability.	
4	**Assign or remove BIS/HFAI capability.**		
	Select **Enter** or **Delete**.	You may continue to assign or remove BIS/HFAI capability to additions extensions by repeating Steps 3 and 4.	F10 F8
5	**Return to the System Programming menu.**		
	Select **Exit** two times.		F5 F5

Analog Multiline Telephones with Voice Announce to Busy

Use this procedure to dedicate a voice or voice pair to be used to provide the Voice Announce to Busy feature to an analog multiline telephone.

The extension number associated with the first (odd-numbered) extension jack in the pair is the telephone's extension number. The extension number for the second (even-numbered) extension jack is dedicated to the Voice Announce to Busy feature. Calls cannot be placed to the extension jack reserved for the Voice Announce to Busy feature.

Voice Announce to Busy must be disabled at data stations.

NOTE:
This procedure does not apply to MLX telephones (Voice Announce to Busy is automatically provided) and cannot be programmed for single-line telephones.

Summary: Analog Multiline Telephones with Voice Announce to Busy

Programmable by	System Manager
Mode	All
Idle Condition	System idle
Planning Form	Form 4b, Analog Multiline Telephone Form 5a, Direct-Line Console (DLC) Data Form 1a, Modem Data Station
Factory Setting	Not applicable
Valid Entries	Extension numbers
Inspect	Yes
Copy Option	Yes
Console Procedure	`Extensions`→`VoiceSignl`→Dial ext. no.→`Enter`→`Exit`→`Exit`
PC Procedure	F6 → F10 → Type ext. no. → F10 → F5 → F5

Procedure: Analog Multiline Telephones with Voice Announce to Busy

Console Display/Instructions	Additional Information	PC
1 Select the Extensions menu.		

`System Programming: >`
`Make a selection`
`System  Extensions`
`SysRenumber  Options`
`Operator  Tables`
`LinesTrunks  AuxEquip`
`Exit  NightSrvce`
		F6

2 Select Voice Signal.		

`Extensions: >`
`Make a selection`
`LinesTrunks  RestrctCopy`
`Line Copy  Account`
`Dial Outcd  BIS/HFAI`
`Restriction  Call Pickup`
`Exit  VoiceSignl`
		F10

	Console Display/Instructions	Additional Information	PC
3	**Specify the first extension (odd numbered) of the pair.**		

	`Voice Signal Pair:`
	`Enter voice signal pairs`
	
	`Delete`
	`Backspace`
	`Exit Enter`
		If no DSS is attached:
		SP: "Entering an Extension"
		
		The other extension in the pair is automatically assigned: Press the **Inspct** button to view the pair.
		
		If DSS is attached:
		Toggle the red LED on or off as required. Go to Step 5.
		On = assigns pairing for Voice Announce to busy.
		Off = removes pairing for Voice Announce to busy.
		
		The red LED goes on automatically for the other extension in the pair.	

4	**Specify whether or not the telephone is paired for Voice Announce to Busy.**		
	Select `Enter` or `Delete`.	You may continue to assign or remove the Voice Announce to Busy feature to additional extensions by repeating Steps 3 and 4.	F10 F8
5	**Return to the System Programming menu.**		
	Select `Exit` two times.		F5 F5

Analog Multiline Telephones in Data Stations

See "Data Features."

Fax Machines

Use this procedure to add a fax machine by assigning the extension jack used to connect the fax machine. To remove a fax machine and free the extension jack for another use, you must remove the extension jack assignment.

In addition, you can specify the extensions to receive a message-waiting indication (MWI) when a fax transmission is received, and specify the length of time before the system registers that a fax has arrived and sends the message-waiting indication.

NOTE:
Do not use this procedure for fax machines connected to analog multiline telephones with a General Purpose Adapter (GPA). In a GPA configuration features cannot be assigned to the fax independently of the telephone.

A maximum of 16 fax machines can have the Fax Message Waiting feature. Additional fax machines (more than 16) can be installed, but these machines cannot have this feature.

You can specify up to four telephones to receive the message-waiting indication when a fax transmission is received. Note that fax machines can only send and not receive message-waiting indications.

Summary: Fax

Programmable by	System Manager
Mode	All
Idle Condition	Not required
Planning Form	Form 4b, Analog Multiline Telephone Form 4d, MLX Telephone Form 4e, MFM Adjunct: MLX Telephone Form 4f, Tip/Ring Equipment Form 5a, Direct-Line Console (DLC): Analog Form 5b, Direct-Line Console (DLC): Digital Form 5c, MFM Adjunct: DLC
Factory Setting	10 seconds
Valid Entries	0 to 30 seconds
Inspect	Yes
Copy Option	No
Console Procedure	`AuxEquip`→`Fax`→`Extension`→Dial ext. no.→`Enter`→`Exit`→`Msg Waiting`→Dial fax machine ext. no.→`Enter`→Dial MWI ext. no.→`Enter`→`Threshold`→**Drop**→Dial no. of seconds→`Enter`→`Exit`→`Exit`
PC Procedure	[F9]→[F3]→[F1]→Type ext. no.→[F10]→[F5]→[F2]→Type fax machine ext. no.→[F10]→Type MWI ext. no.→[F10]→[F3]→[Alt] + [P]→Type no. of seconds [F10]→[F5]→[F5]

Procedure: Fax

	Console Display/Instructions	Additional Information	PC
1	**Select the Auxiliary Equipment menu.**		
	System Programming: > Make a selection System Extensions SysRenumber Options Operator Tables LinesTrunks AuxEquip Exit NightSrvce		F9
2	**Select Fax.**		
	Auxiliary Equipment: > Make a selection MusicOnHold VMS/AA Ldspkr Pg Fax MaintAlarms Exit		F3
3	**Select Extension.**		
	Fax: Make a selection Extension Msg Waiting Threshold Exit		F1
4	**Specify the extension to be used for the fax machine.**		
	Fax Extension: Enter fax extension Delete Backspace Exit Enter	**If no DSS is attached**: **SP:** "Entering an Extension" **If DSS is attached**: Toggle the red LED on or off as required. Go to Step 6. On = jack connects to fax machine. Off = jack provides another purpose.	
5	**Assign or remove the extension.**		
	Select **Enter** or **Delete**.	You may continue to assign or remove fax machines to additional extensions by repeating Steps 4 and 5.	F10 F8
6	**Return to the Fax menu.**		
	Select **Exit**.		F5

	Console Display/Instructions	Additional Information	PC
7	**Select Message Waiting.**		
	Fax: Make a selection Extension Msg Waiting Threshold Exit		F2
8	**Enter the extension for the fax machine that will send the message-waiting indication.**		
	Fax Msg. Waiting Enter the fax extension number Backspace Exit Enter	**SP:** "Entering an Extension"	
9	**Save your entry.**		
	Select **Enter**.		F10
10	**Specify the extension to receive the message-waiting indication.**		
	Fax *xxxx*: Enter message waiting extension Delete Backspace Next Exit Enter	*xxxx* = number entered in Step 8 **If no DSS is attached**: **SP:** "Entering an Extension" **If DSS is attached**: Toggle the red LED on or off as required. Go to Step 13. On = assign message-waiting indication to extension. Off = remove message-waiting indication from extension.	
11	**Assign or remove the extension to receive the message-waiting indication.**		
	Select **Enter** or **Delete**.	You may continue to assign or remove message-waiting indication to additional extensions by repeating Steps 10 and 11.	F10 F8
12	**Continue to assign the message-waiting indication to another fax extension or go to Step 13.**		
	Select **Next**	Return to Step 10 to continue programming. The next fax extension will be displayed on Line 1.	F9

	Console Display/Instructions	Additional Information	PC
13	**Return to the Fax menu.**		
	Select **Exit**.		F5
14	**Select Threshold.**		

	`Fax:`
	`Make a selection`
	`Extension`
	`Msg Waiting`
	`Threshold`
	
	`Exit`
			F3

15	**Erase the current number of seconds (*xx*).**		

	`FAX Threshold Duration:`
	`Enter duration (0-30sec)`
	
	xx
	
	`Backspace`
	`Exit  Enter`
		Press **Drop**.	Alt + P

16	**Enter the number of seconds to wait before the system is notified that a fax message has arrived (*nn* = 0 to 30).**		
		Dial or type [*nn*].	
17	**Save your entry.**		
	Select **Enter**.		F10
18	**Return to the System Programming menu.**		
	Select **Exit** two times.		F5 F5

Optional Telephone Features

The procedures in this section detail the steps in programming the following optional features:

- Extension Language
- Pool Dial-Out Code
- Call Restrictions
- Copy Call Restrictions
- ARS Restriction Level for Extensions
- Forced Account Code Entry
- Microphone Operation
- Remote Call Forwarding
- Delayed Call Forwarding
- Authorization Codes

Extension Language

Use this procedure to change the language for an MLX telephone. It applies to Releases 1.1 and later only.

Summary: Extension Language

Programmable by	Users and system manager
Mode	All
Idle Condition	Not required
Planning Form	Form 4d, MLX Telephone Form 5b, Direct-Line Console (DLC): Digital Data Form 1b, 7500B Data Station
Factory Setting	English
Valid Entries	English, French, Spanish
Inspect	No
Copy Option	No

Console Procedure	To program a single extension: **More**→Language→Extensions→Single→Dial ext. no.→Enter→Select a language→Enter→Exit→Exit To program a block of extensions: **More**→Language→Extensions→Block→Dial starting ext. no.→Enter→Dial ending ext. no.→Enter→Select a language→Enter→Exit→Exit
PC Procedure	To program a single extension: PgUp→F6→F2→F1→Type ext. no. →F10→Select a language→F10→[F5→F5 To program a block of extensions: PgUp→F6→F2→F2→Type starting ext. no.→F10→Type ending ext. no.→Select a language→F10→F5→F5

Procedure: Extension Language

	Console Display/Instructions	Additional Information	PC
1	**Go to the second screen of the System Programming menu.**		
	System Programming: > Make a selection System Extensions SysRenumber Options Operator Tables LinesTrunks AuxEquip Exit NightSrvce	Select **More**.	PgUp
2	**Select Language.**		
	System Programming: Make a selection Labeling Language Data Print Cntr-Prg Exit		F6
3	**Select Extensions.**		
	Language: Make a selection SystemLang Extensions SMDR Printer Exit		F2

	Console Display/Instructions	Additional Information	PC
4	**Select an option.**	● ◆	
	Extension Language: Make a selection Single Block Exit	For a single extension, select **Single** and go to ● Single Extension Procedure. For a block of extensions, select **Block** and go to ◆ Block Procedure.	F1 F2

● Single Extension Procedure

1	**Enter the extension number.**		
	Extension Language: Enter extension number Backspace Exit Enter	**If no DSS is attached:** **SP:** "Entering an Extension" **If DSS is attached:** Toggle the red LED on or off as required. Go to Step 6. On = extension language is French. Off = extension language is English. Flashing = extension language is Spanish.	
2	**Save your entry.**		
	Select **Enter**.		F10
3	**Specify the language for the extension.**		
	Extension *xxxx* Language: Select one English French Spanish Next Exit Enter	*xxxx* = extension entered in Step 1 Select **English**, **French**, or **Spanish**.	 F1 F2 F3
4	**Continue to assign the language to additional extensions or go to Step 5.**		
	Select **Next**	Return to Step 3 to continue programming. The next extension will be displayed on Line 1.	F9
5	**Save your entry.**		
	Select **Enter**.		F10
6	**Return to the System Programming menu.**		
	Select **Exit** two times.		F5 F5

◆ Block Procedure

	Console Display/Instructions	Additional Information	PC
1	**Enter the starting extension number.**		

	`Extension Language:`
	`Enter starting extension`
	
	`Backspace`
	`Exit  Enter`
		SP: "Entering an Extension"	

2	**Save your entry.**		
	Select **Enter**.		F10
3	**Enter the ending extension number.**		

	`Lang for ext` *xxxx* `to:`
	`Enter ending extension`
	
	`Backspace  Next`
	`Exit  Enter`
		xxxx = extension entered in Step 1
		
		SP: "Entering an Extension"	

4	**Save your entry.**		
	Select **Enter**.		F10
5	**Specify the language for the extensions.**		

	`Lang Exts` *xxxx* `to` *xxxx*`:`
	`Select one`
	`English`
	`French`
	`Spanish`
	
	`Exit  Enter`
		xxxx to *xxxx* = range of extensions entered in Steps 1 and 3
		
		Select **English**,
		French, or
		Spanish.
			
			F1
			F2
			F3

6	**Save your entry.**		
	Select **Enter**.		F10
7	**Return to the System Programming menu.**		
	Select **Exit** two times.		F5 F5

Pool Dial-Out Code

Use this procedure to allow or restrict dialing pool dial-out codes and the placing of calls on specific line/trunk pools. Beginning with Release 3.1, the default settings restrict all telephones from dialing any line/trunk pool dial-out code.

NOTE:
Prior to Release 3.1, the default settings allow all telephones to dial any line/trunk pool dial-out code. Entering a pool dial-out code and then deleting that code restricts the user from using the pool associated with the entered code.

Summary: Pool Dial-Out Code

Programmable by	System manager
Mode	Hybrid/PBX
Idle Condition	Telephone idle
Planning Form	Form 4b, Analog Multiline Telephone Form 4d, MLX Telephone Form 4e, MFM Adjunct: MLX Telephone Form 4f, Tip/Ring Equipment Form 5a, Direct-Line Console (DLC): Analog Form 5b, Direct-Line Console (DLC): Digital Form 5c, MFM Adjunct (DLC): Digital Form 5d, Queued Call Console (QCC) Data Form 1a, Modem Data Station Data Form 1b, 7500B Data Station
Factory Setting	Main pool: 70; All other pools: 890 to 899. All telephones are restricted from dialing any pool dial-out code.
Valid Entries	Pool numbers
Inspect	Yes
Copy Option	No
Console Procedure	`Extensions`→`Dial OutCd`→Dial ext. no.→`Enter`→Dial pool dial-out code→`Enter`→`Exit`→`Exit`
PC Procedure	F6→F3→Type ext. no.→F10→Type pool dial-out code →F10→F5→F5

Procedure: Pool Dial-Out Code

Console Display/Instructions	Additional Information	PC
1 Select the Extensions menu.		

`System Programming: >`
`Make a selection`
`System Extensions`
`SysRenumber Options`
`Operator Tables`
`LinesTrunks AuxEquip`
`Exit NightSrvce`
		F6

	Console Display/Instructions	Additional Information	PC
2	**Select Dial-Out Code.**		
	Extensions: > Make a selection LinesTrunks RestrctCopy Line Copy Account Dial Outcd BIS/HFAI Restriction Call Pickup Exit VoiceSignl		F3
3	**Specify the extension.**		
	Assign Pool DialOut Cd: Enter extension Backspace Exit Enter	**If no DSS is attached**: **SP:** "Entering an Extension" **If DSS is attached**: Toggle the red LED on or off as required. Go to Step 5. On = pool dial-code is assigned. Off = pool dial-code is not assigned.	
4	**Save your entry.**		
	Select **Enter**	*If you get the Station Busy message, wait for an idle condition or exit system programming and try again later.*	F10
5	**Enter the pool dial-out code.**		
	Extension *xxxx*: Enter pool dialout code Delete Backspace Next Exit Enter	*xxxx* = extension entered in Step 3 Dial or type [*nnn*].	
6	**Allow or restrict the extension from using the pool dial-out code.**		
	Select **Enter** or **Delete**.	You may continue to allow or restrict additional pool dial-out codes from this extension by repeating Steps 5 and 6.	F10 F8
7	**Continue to program pool dial-out codes for another extension or go to Step 8.**		
	Select **Next**	Return to Step 5 to continue programming. The next extension will be displayed on Line 1.	F9
8	**Return to the System Programming menu.**		
	Select **Exit** two times.		F5 F5

Call Restrictions

Use this procedure to change individual telephone calling restrictions to one of the following:

- Unrestricted
- Restricted from making all outgoing calls
- Restricted from making toll calls

Summary: Call Restrictions

Programmable by	System manager
Mode	All
Idle Condition	Telephone idle
Planning Form	Form 4b, Analog Multiline Telephone Form 4d, MLX Telephone Form 4e, MFM Adjunct: MLX Telephone Form 4f, Tip/Ring Equipment Form 5a, Direct-Line Console (DLC): Analog Form 5b, Direct-Line Console (DLC): Digital Form 5c, MFM Adjunct: DLC Form 5d, Queued Call Console (QCC) Data Form 1a, Modem Data Station Data Form 1b, 7500B Data Station
Factory Setting	Unrestricted
Valid Entries	Unrestricted, Outward restricted, Toll restricted
Inspect	No
Copy Option	Yes
Console Procedure	Extensions→Restriction→Dial ext. no.→Enter→Select restriction→Enter→Exit
PC Procedure	F6 → F4 → Type ext. no. → F10 → Select restriction → F10 → F5

Procedure: Call Restrictions

	Console Display/Instructions	Additional Information	PC
1	**Select the Extensions menu.**		
	System Programming: > Make a selection System Extensions SysRenumber Options Operator Tables LinesTrunks AuxEquip Exit NightSrvce		F6

	Console Display/Instructions	Additional Information	PC
2	**Select Restrictions.**		
	Extensions: > Make a selection LinesTrunks RestrctCopy Line Copy Account Dial OutCd BIS/HFAI Restriction Call Pickup Exit VoiceSignl		F4
3	**Specify the extension.**		
	Call Restriction: Enter extension Backspace Exit Enter	**SP:** “Entering an Extension”	
4	**Save your entry.**		
	Select **Enter**	*If you get the Station Busy message, wait for an idle condition or exit system programming and try again later.*	F10
5	**Select the appropriate restriction.**		
	Extension *xxxx*: Select one Unrestricted Outward Restrict Toll Restrict Next Exit Enter	*xxxx* = number entered in Step 3 **Unrestricted** = remove all restrictions. **Outward Restrict** = restrict telephone from making outside calls (local and toll). **Toll Restrict** = restrict telephone from making toll calls. Press the button or function key next to your selection.	
6	**Continue to assign or remove restrictions from another extension or go to Step 7.**		
	Select **Next**	Return to Step 5 to continue programming. The next extension will be displayed on Line 1.	F9
7	**Save your entry.**		
	Select **Enter**.		F10
8	**Return to the System Programming menu.**		
	Select **Exit**.		F5

Copy Call Restrictions

Use this procedure to copy calling restrictions, allowed lists, and disallowed lists. Feature assignment must be completed for the “copy from” extension. These features can then be copied to an individual extension or block of extensions with identical calling restriction requirements.

If you are copying restrictions to a block of extensions and one of the extensions in the block is in use, the display shows the `Station Busy - Pls Wait` message. Copying for the rest of the extensions in the block is delayed until the busy extension becomes idle. The number of the busy extension is not shown. If a DSS is attached, the LED associated with the busy extension is on. If you exit instead of waiting for the busy extension to become idle, copying for the rest of the extensions in the block is canceled; however, the restrictions that have already been copied are not canceled.

If you are copying restrictions to a block of extensions, they must be sequentially numbered.

The extensions you are copying to and from can be both operator and nonoperator positions.

NOTE:
Dial-out code restrictions are not copied.

Summary: Copy Call Restrictions

Programmable by	System manager
Mode	All
Idle Condition	“Copy to” telephone(s) idle
Planning Form	Form 4b, Analog Multiline Telephone Form 4d, MLX Telephone Form 4e, MFM Adjunct: MLX Telephone Form 5a, Direct-Line Console (DLC): Analog Form 5b, Direct-Line Console (DLC): Digital Form 5c, MFM Adjunct: DLC Form 5d, Queued Call Console (QCC) Data Form 1a, Modem Data Station Data Form 1b, 7500B Data Station
Factory Setting	Not applicable
Valid Entries	Not applicable
Inspect	No
Copy Option	Not applicable

Console Procedure	To copy to a single extension: Extensions→RestrctCopy→Single→Dial copy from ext. no.→Enter→Dial copy to ext. no.→Enter→Exit→Exit →Exit To copy to a block of extensions: Extensions→RestrctCopy→Block→Dial copy from ext. no.→Enter→Dial first no. in copy to block→Enter→Dial last no. in copy to block→Enter→Exit→Exit→Exit
PC Procedure	To copy to a single extension: F6→F6→F1→Type copy from ext. no.→F10→Type copy to ext. no.→F10→F5→F5→F5 To copy to a block of extensions: F6→F6→F2→Type copy from ext. no.→F10→Type first copy no. in copy to block→F10→F5→F5→F5

Procedure: Copy Call Restrictions

	Console Display/Instructions	Additional Information	PC
1	**Select the Extensions menu.**		
	System Programming: > Make a selection System Extensions SysRenumber Options Operator Tables LinesTrunks AuxEquip Exit NightSrvce		F6
2	**Select Restrict Copy.**		
	Extensions: > Make a selection LinesTrunks RestrctCopy Line Copy Account Dial OutCd BIS/HFAI Restriction Call Pickup Exit VoiceSignl		F6
3	**Specify whether to copy calling restrictions to an individual extension or to a block of extensions.**	● ◆	
	Copy Restrictions: Make a selection Single Block Exit	If you select **Single**, go to ● Single Extension Procedure. If you selected **Block**, go to ◆ Block Procedure.	F1 F2

● Single Extension Procedure

	Console Display/Instructions	Additional Information	PC
1	**Specify the extension from which you want to copy calling restrictions.**		

	`Restriction Copy:`
	`Enter extension to copy from`
	
	`Backspace`
	`Exit  Enter`
		SP: "Entering an Extension"	

2	**Save your entry.**		
	Select **Enter**		F10
3	**Specify the extension to which you want to copy call restrictions.**		

	`Copy extension xxxx to:`
	`Enter extension`
	
	`Backspace  Next`
	`Exit  Enter`
		xxxx = extension number entered in Step 4
		
		SP: "Entering an Extension"	

4	**Continue to copy calling restrictions from another extension to an individual extension or go to Step 3.**		
	Select **Next**	Return to Step 3 to continue programming. The next extension will be displayed on Line 1.	F9
5	**Save your entry.**		
	Select **Enter**.		F10
6	**Return to the System Programming menu.**		
	Select **Exit** three times.		F5 F5 F5

◆ Block Procedure

1	**Specify the extension from which you want to copy calling restrictions.**		

	`Restriction Copy:`
	`Enter extension to copy from`
	
	`Backspace`
	`Exit  Enter`
		SP: "Entering an Extension"	

2	**Save your entry.**		
	Select **Enter**		F10

	Console Display/Instructions	Additional Information	PC
3	**Enter the logical ID of the first extension in the block to which you want to copy call restrictions (*nnn* = 1 to 144).**		

	`Copy extension xxxx To:`
	`Enter starting extension`
	`Logical id (1 - 144)`
	
	`Backspace`
	`Exit  Enter`
		xxxx = extension entered in Step 4
		
		Dial or type # [*nnn*].	

4	**Save your entry.**		
	Select **Enter**.		F10
5	**Enter the logical ID of the last extension in the block (*nnn* = 1 to 144).**		

	`Start at extension xxxx:`
	`Enter ending extension`
	`Logical id (1 - 144)`
	
	`Backspace`
	`Exit  Enter`
		xxxx = extension entered in Step 1
		
		Dial or type # [*nnn*].	

6	**Save your entry.**		
	Select **Enter**.		F10
7	**Return to the System Programming menu.**		
	Select **Exit** three times.		F5 F5 F5

ARS Restriction Level For Extensions

Use this procedure to assign an ARS restriction level to an extension. Outgoing calls can only be made to routes that have a Facility Restriction Level (FRL) lower than or equal to that of the extension where the call is being made. Only outgoing calls are affected; users can receive inside, local, and toll calls on restricted telephones and can join any type of call in progress.

The restriction level assigned to extensions is opposite to the FRL assigned to routes, where 0 is the most and 6 is the least restrictive.

Summary: Assigning ARS Restriction Level For an Extension

Programmable by	System manager
Mode	Hybrid/PBX only
Idle Condition	Not required

Planning Form	Form 4b, Analog Multiline Telephone Form 4d, MLX Telephone Form 4e, MFM Adjunct: MLX Telephone Form 4f, Tip/Ring Equipment Form 5a, Direct-Line Console (DLC): Analog Form 5b, Direct-Line Console (DLC): Digital Form 5c, MFM Adjunct: DLC Form 6g, Call Restriction Assignments and Lists
Factory Setting	3
Valid Entries	0-6, (0 is most restrictive and 6 is least restrictive)
Inspect	No
Copy Option	No
Console Procedure	`Extensions`→**More**→`ARS Restrict`→Dial ext. no.→`Enter`→**Drop**→Dial restriction level→`Enter`→`Exit`
PC Procedure	F6 → PgUp → F6 → Type ext. no. → F10 → Alt + P → Type restriction level → F10 → F5

Procedure: Assigning ARS Restriction Level For an Extension

	Console Display/Instructions	Additional Information	PC
1	**Select the Extensions menu.**		

	`System Programming: >`
	`Make a selection`
	`System  Extensions`
	`SysRenumber  Options`
	`Operator  Tables`
	`LinesTrunks  AuxEquip`
	`Exit  NightSrvce`
			F6

2	**Go to the second screen of the Extensions menu.**		

	`Extensions: >`
	`Make a selection`
	`LinesTrunks  RestrctCopy`
	`Line Copy  Account`
	`Dial OutCd  BIS/HFAI`
	`Restriction  Call Pickup`
	`Exit  VoiceSignl`
		Press **More**.	PgUp

	Console Display/Instructions	Additional Information	PC
3	**Select ARS Restrict.**		

	`Extensions: >`
	`Make a selection`
	`Ext Status  ARS Restrct`
	`Group Page  Mic Disable`
	`Group Cover  Remote Frwd`
	`Grp Calling  Auth Code`
	`Exit  Delay Frwd`
			F6

4	**Specify the extension.**		

	`ARS Restrict:`
	`Enter extension`
	
	`Backspace`
	`Exit  Enter`
		SP: “Entering an Extension”	

5	**Save your entry.**		
	Select **Enter**.		F10
6	**Erase the current Restriction Level (x).**		

	`Extension xxxx:`
	`Enter ARS restrict level`
	`(0-6)`
	`x`
	
	`Backspace  Next`
	`Exit  Enter`
		xxxx = extension entered in Step 4
		
		Press **Drop**.
			Alt + P

7	**Enter the restriction level (*n* = 0 to 6).**		

	`Extension xxxx:`
	`Enter ARS restrict level`
	`(0-6)`
	`x`
	
	`Backspace  Next`
	`Exit  Enter`
		xxxx = extension entered in Step 4
		
		Dial or type [*n*].	

8	**Continue to assign restriction levels to additional extensions or go to Step 9.**		
	Select **Next**	Return to Step 7 to continue programming. The next extension will be displayed on Line 1.	F9
9	**Save your entry.**		
	Select **Enter**.		F10
10	**Return to the System Programming menu.**		
	Select **Exit**.		F5

Forced Account Code Entry

Use this procedure to assign or remove Forced Account Code Entry. When this feature is programmed on individual telephones, the user must enter a 1- to 16-digit account code before making an outside call.

Summary: Forced Account Code Entry

Programmable by	System manager
Mode	All
Idle Condition	Not required
Planning Form	Form 4b, Analog Multiline Telephone Form 4d, MLX Telephone Form 4e, MFM Adjunct: MLX Telephone Form 4f, Tip/Ring Equipment Form 5a, Direct-Line Console (DLC): Analog Form 5b, Direct-Line Console (DLC): Digital Form 5c, MFM Adjunct: DLC Form 5d, Queued Call Console (QCC) Data Form 1a, Modem Data Station Data Form 1b, 7500B Data Station
Factory Setting	Not assigned
Valid Entries	Assigned, not assigned
Inspect	Yes
Copy Option	No
Console Procedure	Extensions→Account→Toggle LED On/Off or Dial ext. no. →Enter→Exit→Exit
PC Procedure	F6→F7→Toggle letter R On/Off or Type ext. no.→F10→F5→F5

Procedure: Forced Account Code Entry

Console Display/Instructions	Additional Information	PC
1 Select the Extensions menu.		
System Programming: > Make a selection System Extensions SysRenumber Options Operator Tables LinesTrunks AuxEquip Exit NightSrvce		F6

	Console Display/Instructions	Additional Information	PC
2	**Select Forced Account Code Entry.**		
	Extensions: > Make a selection LinesTrunks RestrctCopy Line Copy Account Dial OutCd BIS/HFAI Restriction Call Pickup Exit VoiceSignl		F7
3	**Specify the extension.**		
	Forced Account Code: Enter extensions Delete Backspace Exit Enter	**If no DSS is attached**: **SP:** "Entering an Extension" **If DSS is attached**: Toggle the red LED on or off as required. Go to Step 5. On = forced account code entry is assigned to extension. Off = forced account code entry is not assigned to extension.	
4	**Assign or remove the forced account code entry from the extension entered in Step 3.**		
	Select **Enter** or **Delete**.	You may continue to assign or remove forced account code entry from additional extensions by repeating Steps 3 and 4.	F10 F8
5	**Return to the System Programming menu.**		
	Select **Exit** two times.		F5 F5

Microphone Operation

Use this procedure to enable or disable microphones on MLX telephones (except QCC operator positions). When the microphone is disabled, users cannot use the speakerphone to conduct conversations.

NOTE:
The microphone cannot be disabled on analog multiline telephones or on MLX telephones used as QCC operator positions.

Summary: Microphone Operation

Programmable by	System manager
Mode	All
Idle Condition	Not required
Planning Form	Form 4d, MLX Telephone Form 5b, Direct-Line Console (DLC): Digital
Factory Setting	Enabled
Valid Entries	Enabled, Disabled
Inspect	Yes
Copy Option	No
Console Procedure	Extensions→**More**→Mic Disable→Toggle LED On/Off or Dial ext. no.→Enter→Exit→Exit
PC Procedure	F6→PgUp→F7→Toggle letter R On/Off or Type ext. no. →F10→F5→F5

Procedure: Microphone Operation

	Console Display/Instructions	Additional Information	PC
1	**Select the Extensions menu.**		
	System Programming: > Make a selection System Extensions SysRenumber Options Operator Tables LinesTrunks AuxEquip Exit NightSrvce		F6
2	**Go to the second screen of the Extensions menu.**		
	Extensions: > Make a selection LinesTrunks RestrctCopy Line Copy Account Dial OutCd BIS/HFAI Restriction Call Pickup Exit VoiceSignl	Press **More**.	PgUp

	Console Display/Instructions	Additional Information	PC
3	**Select Microphone Disable.**		
	Extensions: > Make a selection Ext Status ARS Restrct Group Page Mic Disable Group Cover Remote Frwd Grp Calling Auth Code Exit Delay Frwd		F7
4	**Specify the extension.**		
	Microphone Disable: Enter extension Delete Backspace Exit Enter	**If no DSS is attached**: **SP:** "Entering an Extension" **If DSS is attached**: Toggle the red LED on or off as required. Go to Step 6. On = microphone operation is assigned to extension. Off = microphone operation is not assigned to extension.	
5	**Assign or remove microphone operation from the extension entered in Step 4.**		
	Select **Enter** or **Delete**.	You may continue to assign or remove microphone operation from additional extensions by repeating Steps 4 and 5.	F10 F8
6	**Return to the System Programming menu.**		
	Select **Exit** two times.		F5 F5

Authorization Codes

The Authorization Code feature allows you to pick up someone else's telephone, enter your authorization code, and complete a call with the restrictions that apply to your own telephone (*home extension*). This includes toll restrictions, outward restriction, Facility Restriction Level (FRL), Allowed Lists, Disallowed Lists, Forced Account Code Entry (FACE), Night Service Exclusion List, and Dial Access to Pools.

Use this procedure to assign or remove an authorization code to an extension. The authorization code can range from 2 to 11 characters (0 - 9, *) and must be unique for each extension. An authorization code cannot begin with a "*."

If you are assigning authorization codes for a group of sequential extensions, begin programming the lowest extension number to take advantage of the **Next** screen key (see “Standard Procedures”).

Summary: Authorization Codes

Programmable by	System manager
Mode	All
Idle Condition	Not required
Planning Form	Form 6h, Authorization Codes
Factory Setting	Not assigned
Valid Entries	2 - 11 characters (0 - 9, *)
Inspect	Yes
Copy Option	No
Console Procedure	Extensions→**More**→Auth Code→Dial ext. no.→Enter→ Dial authorization code→Enter→Exit→Exit
PC Procedure	F6→PgUp→F9→Type ext. no.→F10→Type authorization code→F10→F5→F5

Procedure: Authorization Codes

	Console Display/Instructions	Additional Information	PC
1	**Select the Extensions menu.**		
	System Programming: > Make a selection System Extensions SysRenumber Options Operator Tables LinesTrunks AuxEquip Exit NightSrvce		F6
2	**Go to the second screen of the Extensions menu.**		
	Extensions: > Make a selection LinesTrunks RestrctCopy Line Copy Account Dial OutCd BIS/HFAI Restriction Call Pickup Exit VoiceSignl	Press **More**.	PgUp

	Console Display/Instructions	Additional Information	PC
3	**Select Authorization Code.**		
	Extensions: > Make a selection Ext Status ARS Restrct Group Page Mic Disable Group Cover Remote Frwd Grp Calling Auth Code Exit Delay Frwd		F9
4	**Specify the extension.**		
	Authorization Code: Enter extension Backspace Next Exit Enter	**SP:** “Entering an Extension”	
5	**Save your entry.**		
	Select **Enter**		F10
6	**Erase the current authorization code (xxxxxxxxxxx)**		
	Extension xxxx: Enter Authorization Code (2-11 digits, 0-9, *) xxxxxxxxxxx Backspace Next Exit Enter	*xxxx* = extension entered in Step 4 Press **Drop**.	Alt + P
7	**Enter the Authorization Code.**		
	Extension xxxx: Enter Authorization Code (2-11 digits, 0-9, *) xxxxxxxxxxx Backspace Next Exit Enter	Dial or type the authorization code: Use backspace to delete the last digit entered.	
8	**Save your entry.**		
	Select **Enter** or		F10
	Select **Next** to save your entry and assign an authorization code to the next extension in a sequence. Return to Step 6.		F9
9	**Return to the System Programming menu.**		
	Select **Exit** two times.		F5 F5

Remote Call Forwarding

Use this procedure to allow or disallow the Remote Call Forwarding capability, which allows users to forward calls to an outside number.

If a telephone with Remote Call Forwarding has one or more personal lines assigned, that telephone can be assigned as the principal user, and calls received on that line are forwarded to outside numbers. See “Principal User of Personal Line.”

NOTE:
This feature is not recommended unless you have ground-start trunks. See “Disconnect Signaling Reliability” and “Hold Disconnect Interval.”

Summary: Remote Call Forwarding

Programmable by	System manager
Mode	All
Idle Condition	Not required
Planning Form	Form 4b, Analog Multiline Telephone Form 4d, MLX Telephone Form 4e, MFM Adjunct: MLX Telephone Form 4f, Tip/Ring Equipment Form 5a, Direct-Line Console (DLC): Analog Form 5b, Direct-Line Console (DLC): Digital Form 5c, MFM Adjunct: DLC Form 5d, Queued Call Console (QCC) Data Form 1a, Modem Data Station Data Form 1b, 7500B Data Station
Factory Setting	Disallowed
Valid Entries	Disallowed, allowed
Inspect	Yes
Copy Option	No
Console Procedure	`Extensions`→**More**→`Remote Frwd`→Toggle LED On/Off or Dial ext. no.→`Enter`→`Exit`→`Exit`
PC Procedure	[F6]→[PgUp]→[F8]→Toggle letter `R` On/Off or Type ext. no. →[F10]→[F5]→[F5]

Procedure: Remote Call Forwarding

	Console Display/Instructions	Additional Information	PC
1	**Select the Extensions menu.**		
	System Programming: > Make a selection System Extensions SysRenumber Options Operator Tables LinesTrunks AuxEquip Exit NightSrvce		F6
2	**Go to the second screen of the Extensions menu.**		
	Extensions: > Make a selection LinesTrunks RestrctCopy Line Copy Account Dial OutCd BIS/HFAI Restriction Call Pickup Exit VoiceSignl	Press **More**.	PgUp
3	**Select Remote Call Forward.**		
	Extensions: > Make a selection Ext Status ARS Restrct Group Page Mic Disable Group Cover Remote Frwd Grp Calling Auth Code Exit Delay Frwd		F8
4	**Specify the extension.**		
	Remote Call Forward: Enter extension Delete Backspace Exit Enter	**If no DSS is attached**: **SP:** “Entering an Extension” **If DSS is attached**: Toggle the red LED on or off as required. Go to Step 6. On = remote call forwarding is assigned to extension. Off = remote call forwarding is not assigned to extension.	

	Console Display/Instructions	Additional Information	PC
5	**Assign or remove remote call forwarding from the extension entered in Step 4.**		
	Select **Enter** or **Delete**.		F10 F8
		You may assign or remove remote call forwarding from additional extensions by repeating Steps 4 and 5.	
6	**Return to the System Programming menu.**		
	Select **Exit** two times.		F5 F5

Delayed Call Forwarding

Delayed Call Forwarding allows a user to answer or screen a call arriving at an extension before the call is forwarded through Call Forwarding, Remote Call Forwarding, or Follow Me. The forwarding delay is the number of rings before the call is forwarded. This delay can range from 0 to 9 rings. If the forwarding delay is set to 0, the call is forwarded immediately. Delayed Call Forwarding is only available in Release 4.0 and later.

NOTE:
When Do Not Disturb is activated at an extension, it overrides Delayed Call Forwarding and the call is forwarded immediately.

Use this procedure to assign or remove Delayed Call Forwarding from an extension. If you are assigning Delayed Call Forwarding to a group of sequential extensions, begin programming the lowest extension number to take advantage of the **Next** screen key (see “Standard Procedures”).

Summary: Delayed Call Forwarding

Programmable by	System manager
Mode	All
Idle Condition	Not required
Planning Form	Form 4b, Analog Multiline Telephone Form 4d, MLX Telephone Form 4e, MFM Adjunct: MLX Telephone Form 4f, Tip/Ring Equipment Form 5a, Direct-Line Console (DLC): Analog Form 5b, Direct-Line Console (DLC): Digital Form 5c, MFM Adjunct: DLC Form 5d, Queued Call Console (QCC) Data Form 1a, Modem Data Station Data Form 1b, 7500B Data Station

Factory Setting	0 rings
Valid Entries	0 - 9 rings
Inspect	Yes
Copy Option	No
Console Procedure	Extensions→**More**→Delay Frwd→Dial ext. no.→Enter →**Drop**→Dial no. of delay rings→Enter→Exit→Exit
PC Procedure	F6→PgUp→F10→Type ext. no.→F10→Alt+P→Type no. of delay rings→F10→F5→F5

Procedure: Delayed Call Forwarding

	Console Display/Instructions	Additional Information	PC
1	**Select the Extensions menu.**		
	System Programming: > Make a selection System Extensions SysRenumber Options Operator Tables LinesTrunks AuxEquip Exit NightSrvce		F6
2	**Go to the second screen of the Extensions menu.**		
	Extensions: > Make a selection LinesTrunks RestrctCopy Line Copy Account Dial OutCd BIS/HFAI Restriction Call Pickup Exit VoiceSignl	Press **More**.	PgUp

Console Display/Instructions	Additional Information	PC
3 Select Authorization Code.		

`Extensions: >`
`Make a selection`
`Ext Status  ARS Restrct`
`Group Page  Mic Disable`
`Group Cover  Remote Frwd`
`Grp Calling  Auth Code`
`Exit  Delay Frwd`
		F10

4 Specify the extension.		

`Delay Frwd:`
`Enter extension`
 	
`Backspace`
`Exit  Enter`
	SP: “Entering an Extension”	

5 Save your entry.		
Select **Enter**		F10
6 Erase the current number of delay rings (x).		

`Extension xxxx:`
`Enter Delay Rings (0-9)`
 	
`x`
 	
`Backspace  Next`
`Exit  Enter`
	xxxx = extension entered in Step 4
	
	Press **Drop** or **Backspace**.
		Alt + P
		F4

7 Enter the number of delay rings.		

`Extension xxxx:`
`Enter Delay Rings (0-9)`
 	
`x`
 	
`Backspace  Next`
`Exit  Enter`
	Dial or type the number of delay rings:
	
	You may use backspace to delete the last digit entered.	

8 Save your entry.		
Select **Enter** or **Next**.	If you select **Next** to assign a forwarding delay to the next extension in a sequence, repeat Steps 6 and 7.	F10 F9
9 Return to the System Programming menu.		
Select **Exit** two times.		F5 F5

Trunk-to-Trunk Transfer

Use this procedure to enable or disable trunk-to-trunk transfer at an extension. When trunk-to-trunk transfer is disabled, users cannot transfer an outside call to an outside line.

NOTE:
A single-line set can never perform a trunk-to-trunk transfer.

Summary: Trunk-to-Trunk Transfer

Programmable by	System manager
Mode	All
Idle Condition	Not required
Planning Form	Form 4b, Analog Multiline Telephone Form 4d, MLX Telephone Form 4e, MFM Adjunct: MLX Telephone Form 4f, Tip/Ring Equipment Form 5a, Direct-Line Console (DLC): Analog Form 5b, Direct-Line Console (DLC): Digital Form 5c, MFM Adjunct: DLC Form 5d, Queued Call Console (QCC) Data Form 1a, Modem Data Station Data Form 1b, 7500B Data Station
Factory Setting	Disabled
Valid Entries	Enabled, Disabled
Inspect	Yes
Copy Option	No
Console Procedure	Extensions→**More**→**More**→TrkTransfer→Toggle LED On/Off or Dial ext. no.→Enter→Exit→Exit
PC Procedure	F6 → PgUp → PgUp → F7 → Toggle letter R On/Off or Type ext. no.→ F10 → F5 → F5

Procedure: Trunk-to-Trunk Transfer

Console Display/Instructions	Additional Information	PC
1 Select the Extensions menu.		
System Programming: > Make a selection System Extensions SysRenumber Options Operator Tables LinesTrunks AuxEquip Exit NightSrvce		F6

	Console Display/Instructions	Additional Information	PC
2	**Go to the third screen of the Extensions menu.**		

	`Extensions: >`
	`Make a selection`
	`LinesTrunks RestrctCopy`
	`Line Copy Account`
	`Dial OutCd BIS/HFAI`
	`Restriction Call Pickup`
	`Exit VoiceSignl`
		Press **More** twice.	PgUp PgUp

3	**Select Trunk to Trunk Transfer.**		

	`Extensions: >`
	`Make a selection`
	`TrkTransfer`
	
	`Exit`
			F1

4	**Specify the extension.**		

	`Trunk to Trunk Transfer:`
	`Enter extension`
	
	`Delete`
	`Backspace`
	`Exit Enter`
		If no DSS is attached:
		SP: “Entering an Extension”
		
		If DSS is attached:
		Toggle the red LED on or off as required. Go to Step 6.
		On = trunk-to-trunk transfer is enabled.
		Off = trunk-to-trunk transfer is disabled.	

5	**Assign or remove trunk-to-trunk transfer from the extension entered in Step 4.**		
	Select `Enter` to allow trunk-to-trunk transfer or `Delete` to disallow trunk-to-trunk transfer.		F10 F8
	You may continue to assign or remove trunk-to-trunk transfer from additional extensions by repeating Steps 4 and 5.		
6	**Return to the System Programming menu.**		
	Select `Exit` two times.		F5 F5

Optional Group Features

The procedures in this section describe how to program the following optional features:

- Call Pickup Groups
- Group Paging
- Group Coverage Member Assignments
- Group Coverage Delay Interval
- Group Calling Member Assignments
- Group Calling Line/Trunk or Pool Assignments

Call Pickup Groups

Use this procedure to assign or remove an extension from a call pickup group. A call pickup group consists of telephone users who can answer one another's calls by pressing a button or by dialing a code.

NOTES:

1. A maximum of 30 call pickup groups, with a maximum of 15 extensions per group, are allowed.
2. An extension can belong to only one group.
3. Before reassigning an extension to a new group, you must remove it from its current group.

Summary: Call Pickup Groups

Programmable by	System manager
Mode	All
Idle Condition	Not required
Planning Form	Form 7a, Call Pickup Groups
Factory Setting	Not applicable
Valid Entries	Call pickup group number, extension number
Inspect	Yes
Copy Option	No
Console Procedure	`Extensions`→`Call Pickup`→Dial pickup group no.→ `Enter`→Dial ext. no.→`Enter`→`Enter`→`Exit`→`Exit`
PC Procedure	[F6]→[F9]→Type pickup group no.→[F10]→Type ext. no. →[F10]→[F5]→[F5]

Procedure: Call Pickup Groups

Console Display/Instructions	Additional Information	PC
1 Select the Extensions menu.		
System Programming: > Make a selection System Extensions SysRenumber Options Operator Tables LinesTrunks AuxEquip Exit NightSrvce		F6
2 Select Call Pickup.		
Extensions: > Make a selection LinesTrunks RestrctCopy Line Copy Account Dial OutCd BIS/HFAI Restriction Call Pickup Exit VoicesSignl		F9
3 Enter the number of the call pickup group (*nn* = 1 to 30).		
Call Pickup Groups: Enter group number (1-30) Backspace Exit Enter	Dial or type [*nn*].	
4 Save your entry.		
Select **Enter**.		F10
5 Specify the extension.		
Call Pickup Group *xx*: Enter extensions Delete Backspace Next Exit Enter	*xx* = number entered in Step 3 **If no DSS is attached:** **SP:** “Entering an Extension” **If DSS is attached:** Toggle the red LED on or off as required. Go to Step 7. On = extension is included in pickup group. Off = extension is not included in pickup group.	

	Console Display/Instructions	Additional Information	PC
6	**Assign or remove the extension from the call pickup group.**		
	Select `Enter` or `Delete`.		F10 F8
		You may continue to assign or remove extensions from the call pickup group by repeating Steps 5 and 6.	
7	**Assign or remove extensions for another call pickup group or go to Step 8.**		
	Select `Next`		F9
		Return to Step 5 to continue programming. The next extension will be displayed on Line 1.	
8	**Return to the System Programming menu.**		
	Select `Exit` two times.		F5 F5

Group Paging

Use this procedure to assign or remove an extension from a paging group. A paging group consists of telephone users who hear common announcements over the telephone speakerphone. Only MLX telephones and analog multiline telephones with speakerphones can be members of a paging group.

A maximum of six paging groups with a maximum of 10 extensions per group is allowed. A seventh paging group, called the Page All group, is not limited and includes all telephones connected to the system. Extensions cannot be added to or removed from the Page All group.

Summary: Group Paging

Programmable by	System manager
Mode	All
Idle Condition	Not required
Planning Form	Form 7b, Group Paging
Factory Setting	Not applicable
Valid Entries	Extension number
Inspect	Yes
Copy Option	No
Console Procedure	`Extensions`→**More**→Group Page→Dial paging group no.→`Enter`→Dial ext. no.→`Enter`→`Exit`→`Exit`
PC Procedure	F6→PgUp→F2→Type paging group no.→F10→Type ext. no.→F10→F5→F5

Procedure: Group Paging

Console Display/Instructions	Additional Information	PC
1 Select the Extensions menu.		
System Programming: > Make a selection System Extensions SysRenumber Options Operator Tables LinesTrunks AuxEquip Exit NightSrvce		F6
2 Go to the second screen of the Extensions menu.		
Extensions: > Make a selection LinesTrunks RestrctCopy Line Copy Account Dial OutCd BIS/HFAI Restriction Call Pickup Exit VoicesSignl	Press **More**.	PgUp
3 Select Group Page.		
Extensions: Make a selection Ext Status ARS Restrct Group Page Mic Disable Group Cover Remote Frwd Grp Calling Auth Code Exit Delay Frwd		F2
4 Enter the extension number of the paging group.		
Group Page: Enter extension number of group Backspace Exit Enter	See “System Renumbering” in Chapter 5 for the factory setting for extension numbers assigned to paging groups. Dial or type [*n*].	
5 Save your entry.		
Select **Enter**.		F10

	Console Display/Instructions	Additional Information	PC
6	**Specify the extension.**		
	Group Page *xxxx*: Enter extensions Delete Backspace Next Exit Enter	*xxxx* = number entered in Step 4 **If no DSS is attached**: **SP:** "Entering an Extension" **If DSS is attached**: Toggle the red LED on or off as required. Go to Step 9. On = extension is included in paging group. Off = extension is not included in paging group.	
7	**Assign or remove the extension from the paging group.**		
	Select **Enter** or **Delete**.	You may continue to assign or remove extensions from the paging group by repeating Steps 5 and 6.	F10 F8
8	**Continue to assign the extension to another paging group or go to Step 9.**		
	Select **Next**	Return to Step 6 to continue programming. The next paging group will be displayed on Line 1.	F9
9	**Return to the System Programming menu.**		
	Select **Exit** two times.		F5 F5

Group Coverage Member Assignments

Use this procedure to assign or remove an extension from a coverage group. A coverage group is a group of senders. Coverage is an arrangement in which calls from a group of senders are redirected to one or more receivers.

NOTE:
This procedure assigns *senders*. Before you begin, make certain that the *receivers* for the coverage group are also programmed. Receivers can be assigned through individual or centralized telephone programming. You can also use the Integrated Solution II/III feature, Integrated Administration, to assign coverage receivers. See Chapter 5, "Centralized Telephone Programming," for information about the appropriate centralized programming procedure.

A maximum of 30 coverage groups are allowed, each with an unlimited number of members. Up to eight receivers can be assigned per coverage group.

An extension can be a sender in only one group; it can be a receiver for more than one coverage group. A calling group can be assigned as a receiver for a coverage group (see “Group Coverage Receiver”). In Hybrid/PBX mode only, the QCC queue can be a receiver for up to 30 coverage groups. See “QCC Operator to Receive Calls.”

If the sender’s extension has one or more personal lines assigned, the sender can be assigned as the principal user so that calls received on the personal line are sent to receivers programmed for Individual or Group Coverage. See “Principal User for Personal Line.”

To reassign an extension to a new coverage group, just make the assignment; the extension is automatically removed from its old group.

Summary: Group Coverage Member Assignments

Programmable by	System manager
Mode	All
Idle Condition	Not required
Planning Form	Form 7c, Group Coverage
Factory Setting	Not applicable
Valid Entries	Extension numbers
Inspect	Yes
Copy Option	No
Console Procedure	Extensions→**More**→Group Cover→Dial group no.→Enter→Dial ext. no.→Enter→Exit→Exit
PC Procedure	F6→PgUp→F3→Type group no.→F10→Type ext. no.→F10→F5→F5

Procedure: Group Coverage Member Assignments

Console Display/Instructions	Additional Information	PC
1 Select the Extensions menu.		
System Programming: > Make a selection System Extensions SysRenumber Options Operator Tables LinesTrunks AuxEquip Exit NightSrvce		F6

	Console Display/Instructions	Additional Information	PC
2	**Go to the second screen of the Extensions menu.**		

	`Extensions: >`
	`Make a selection`
	`LinesTrunks  RestrctCopy`
	`Line Copy  Account`
	`Dial OutCd  BIS/HFAI`
	`Restriction  Call Pickup`
	`Exit  VoicesSignl`
		Press **More**.	PgUp

3	**Select Group Coverage.**		

	`Extensions:`
	`Make a selection`
	`Ext Status  ARS Restrct`
	`Group Page  Mic Disable`
	`Group Cover  Remote Frwd`
	`Grp Calling  Auth Code`
	`Exit  Delay Frwd`
			F3

4	**Enter the number of the coverage group (*nn* = 1 to 30).**		

	`Group Coverage:`
	`Enter group number(1-30)`
	
	`Backspace`
	`Exit  Enter`
		Dial or type [*nn*].	

5	**Save your entry.**		
	Select **Enter**.		F10
6	**Specify the extension.**		

	`Group Cover xx Senders`
	`Enter extensions`
	
	`  Delete`
	`Backspace  Next`
	`Exit  Enter`
		xx = number entered in Step 4
		
		If no DSS is attached:
		SP: “Entering an Extension”
		
		If DSS is attached:
		Toggle the red LED on or off as required. Go to Step 8.
		On = extension is sender in coverage group.
		Off = extension is not sender in coverage group.	

Console Display/Instructions	Additional Information	PC
7 Assign or remove the extension from the coverage group.		
Select Enter or Delete.		F10 F8
	You may continue to assign or remove extensions from the coverage group by repeating Steps 5 and 6.	
8 Continue to assign the extension to another coverage group or go to Step 9.		
Select Next		F9
	Return to Step 6 to continue programming. The next coverage group will be displayed on Line 1.	
9 Return to the System Programming menu.		
Select Exit two times.		F5 F5

Group Coverage Delay Interval

Use this procedure to specify the number of rings before a call is sent to group coverage receivers.

Summary: Group Coverage Delay Interval

Programmable by	System manager
Mode	All
Idle Condition	Not required
Planning Form	Form 7c, Group Coverage
Factory Setting	Not applicable
Valid Entries	Extension numbers
Inspect	Yes
Copy Option	No
Console Procedure	Options→**More**→Cover Delay→**Drop**→Enter→Dial the number of rings→Enter→Exit
PC Procedure	F7→PgUp→F6→Alt + P→Type the number of rings→F10→F5

Procedure: Group Coverage Delay Interval

	Console Display/Instructions	Additional Information	PC
1	**Select the Options menu.**		
	System Programming: > Make a selection System Extensions SysRenumber Options Operator Tables LinesTrunks AuxEquip Exit NightSrvce		F7
2	**Go to the second screen of the Options menu.**		
	Options: > Make a selection Transfer Callback CampOn Ext Status CallParkRtn SMDR Delay Ring InsideDial Exit ReminderSrv	Press **More**.	PgUp
3	**Select Coverage Delay.**		
	Options: Make a selection Unassigned Cover Delay BehndSwitch Inter-Digit RecallTimer Ringing Freq Rotary SecNT Timer Exit		F6
4	**Erase the current number of rings (*x*).**		
	Coverage Delay: Enter number rings (1-9) *x* Backspace Exit Enter	Press **Drop**.	Alt + P
5	**Enter the number of rings (*n* = 1 to 9).**		
		Dial or type [*n*].	↵
6	**Save your entry.**		
	Select **Enter**.		F10
7	**Return to the System Programming menu.**		
	Select **Exit**.		F5

Group Calling Member Assignments

Use this procedure to assign or remove an extension from a calling group. A calling group is used to direct calls to a group of people who all handle the same type of call. A single extension number is assigned to the group and is used by both inside and outside callers to reach the group.

To reassign an extension to a new calling group, you must remove it from its old group before programming the new assignment.

NOTES:

1. If a linear hunting pattern is indicated on the back of the system planning form (6d), be sure to assign extensions to the group in the exact order that they are shown on the form. The system searches for an available member in the order in which you assign the extensions to the group.
2. A maximum of 32 calling groups with a maximum of 20 extensions per group is allowed.
3. An extension can belong to only one calling group. A QCC cannot be a member of a calling group. The delay announcement device should not be programmed as a calling group member.
4. The extension status feature must be set to the Calling Group or CMS mode before you assign members to the group. See “Extension Status.”

Summary: Group Calling Member Assignments

Programmable by	System manager
Mode	All
Idle Condition	Not required
Planning Form	Form 7c, Group Coverage
Factory Setting	Not applicable
Valid Entries	Extension numbers
Inspect	Yes
Copy Option	No
Console Procedure	`Extensions`→**More**→`Grp Calling`→`Members`→Dial calling group ext. no.→`Enter`→Dial ext. no.→`Enter`→`Exit`→`Exit`→`Exit`
PC Procedure	[F6]→[PgUp]→[F4]→[F9]→Type calling group ext. no.→[F10]→Type ext. no.→[F10]→[F5]→[F5]→[F5]

Procedure: Group Calling Member Assignments

	Console Display/Instructions	Additional Information	PC
1	**Select the Extensions menu.**		
	System Programming: > Make a selection System Extensions SysRenumber Options Operator Tables LinesTrunks AuxEquip Exit NightSrvce		F6
2	**Go to the second screen of the Extensions menu.**		
	Extensions: > Make a selection LinesTrunks RestrctCopy Line Copy Account Dial OutCd BIS/HFAI Restriction Call Pickup Exit VoicesSignl	Press **More**.	PgUp
3	**Select Group Calling.**		
	Extensions: Make a selection Ext Status ARS Restrct Group Page Mic Disable Group Cover Remote Frwd Grp Calling Auth Code Exit Delay Frwd		F4
4	**Select Members.**		
	Group Calling: > Make a selection Hunt Type Queue Alarm DelayAnnce Xtnl Alert GrpCoverage Overflow Message Members Exit Line/Pool		F9
5	**Enter the extension number of the calling group.**		
	Group Calling: Enter extension number of group Backspace Exit Enter	See “System Renumbering” in Chapter 5 for the factory setting for extension numbers assigned to calling groups. Dial or type [*nnnn*].	
6	**Save your entry.**		
	Select **Enter**.		F10

	Console Display/Instructions	Additional Information	PC
7	**Specify the extension.**		

	`Group Calling xxxx:`
	`Enter group members`
	
	`Delete`
	`Backspace Next`
	`Exit Enter`
		xxxx = number entered in Step 5
		
		If no DSS is attached:
		SP: "Entering an Extension"
		
		If DSS is attached:
		Toggle the red LED on or off as required. Go to Step 9.
		On = extension is a member of the calling group.
		Off = extension is not a member of the calling group.	

8	**Assign or remove the extension from the calling group.**		
	Select **Enter** or **Delete**.	You may continue to assign or remove extensions from the calling group by repeating Steps 7 and 8.	F10 F8
9	**Continue to assign the extension to another calling group or go to Step 10.**		
	Select **Next**	Return to Step 7 to continue programming. The next calling group will be displayed on Line 1.	F9
10	**Return to the System Programming menu.**		
	Select **Exit** three times.		F5 F5 F5

Group Calling Line/Trunk or Pool Assignments

Use this procedure to assign or remove lines, trunks, or pools (Hybrid/PBX only) that ring directly into a calling group.

Incoming calls on each line/trunk or pool can be directed to only one calling group.

To reassign a line/trunk or pool to a new calling group, you must remove it from its old group before making the new assignment.

Summary: Group Calling Line/Trunk or Pool Assignments

Programmable by	System manager
Mode	All
Idle Condition	Not required
Planning Form	Form 7d, Group Calling
Factory Setting	Not applicable
Valid Entries	Line, trunk, or pool number
Inspect	Yes
Copy Option	No
Console Procedure	Extensions→**More**→Grp Calling→Line/Pool→Dial calling group ext. no.→Enter→Dial line/trunk no.→Enter →Exit→Exit→Exit
PC Procedure	F6→PgUp→F4→F10→Type calling group ext. no.→F10 →Type line/trunk no.→F10→F5→F5→F5

Procedure: Group Calling Line/Trunk or Pool Assignments

Console Display/Instructions	Additional Information	PC
1 Select the Extensions menu.		
System Programming: > Make a selection System Extensions SysRenumber Options Operator Tables LinesTrunks AuxEquip Exit NightSrvce		F6
2 Go to the second screen of the Extensions menu.		
Extensions: > Make a selection LinesTrunks RestrctCopy Line Copy Account Dial OutCd BIS/HFAI Restriction Call Pickup Exit VoiceSignl	Press **More**.	PgUp

Console Display/Instructions	Additional Information	PC
3 Select Group Calling.		

`Extensions:`
`Make a selection`
`Ext Status  ARS Restrct`
`Group Page  Mic Disable`
`Group Cover  Remote Frwd`
`Grp Calling  Auth Code`
`Exit  Delay Frwd`
		F4

4 Select Line/Pool.		

`Group Calling:  >`
`Make a selection`
`Hunt Type  Queue Alarm`
`DelayAnnce  Xtnl Alert`
`GrpCoverage  Overflow`
`Message  Members`
`Exit  Line/Pool`
		F10

5 Enter the extension of the calling group.		

`Group Calling:`
`Enter extension number`
`of group`
 	
`Backspace`
`Exit  Enter`
	Dial or type [*nnnn*].	

6 Save your entry.		
Select **Enter**.		F10
7 Enter the line/trunk or pool number.		

`Group Calling` *xxxx*`:`
`Enter line/pool number`
 	
`Delete`
`Backspace  Next`
`Exit  Enter`
	xxxx = number entered in Step 5
	
	Dial or type:
	Pool number [*nn*]
	Line/Trunk number [*nnnn*]
	Slot and port number ***[*sspp*]
	Logical ID number **#**[*nnn*].	

8 Assign or remove the line/trunk or pool from the calling group.		
Select **Enter** or **Delete**.		F10 F8
	You may continue to assign or remove lines/trunks or pools from the calling group by repeating Steps 7 and 8.	

	Console Display/Instructions	Additional Information	PC
9	**Continue to assign the line/trunk or pool to another calling group or go to Step 10.**		
	Select **Next**		F9
		Return to Step 7 to continue programming. The next calling group will be displayed on Line 1.	
10	**Return to the System Programming menu.**		
	Select **Exit** three times.		F5 F5 F5

Optional Group Calling Features

This section includes programming procedures for the following optional group calling features:

- Hunt Type
- Group Calling Delay Announcement
- Group Coverage Receiver
- Group Calling Overflow and Thresholds
- Group Calling Message-Waiting Indicator
- Group Calling Calls-in-Queue Alarm Threshold
- Group Calling External Alert for Calls-in-Queue Alarm
- Group Type

Hunt Type

Use this procedure to assign one of the following hunt-type patterns to calling groups:

- **Circular Hunting Pattern**. The system distributes calls to group members by hunting in a circular pattern for the first available extension after the one that received the last call to the group.
- **Linear Hunting Pattern**. The system searches for an available group member in the order in which the extensions were assigned to the calling group.

Summary: Hunt Type

Programmable by	System manager
Mode	All
Idle Condition	Not required
Planning Form	Form 7d, Group Calling
Factory Setting	Circular hunting pattern
Valid Entries	Circular, Linear
Inspect	No
Copy Option	No

Console Procedure	Extensions→**More**→Grp Calling→Hunt Type→Dial calling group ext. no.→Enter→Circular or Linear→Enter→Exit→Exit→Exit
PC Procedure	F6→PgUp→F4→F1→Type calling group ext. no.→F10→F1 or F2→F10→F5→F5

Procedure: Hunt Type

	Console Display/Instructions	Additional Information	PC
1	**Select the Extensions menu.**		
	System Programming: > Make a selection System Extensions SysRenumber Options Operator Tables LinesTrunks AuxEquip Exit NightSrvce		F6
2	**Go to the second screen of the Extensions menu.**		
	Extensions: > Make a selection LinesTrunks RestrctCopy Line Copy Account Dial OutCd BIS/HFAI Restriction Call Pickup Exit VoiceSignl	Press **More**.	PgUp
3	**Select Group Calling.**		
	Extensions: Make a selection Ext Status ARS Restrct Group Page Mic Disable Group Cover Remote Frwd Grp Calling Auth Code Exit Delay Frwd		F4
4	**Select Hunt Type.**		
	Group Calling: > Make a selection Hunt Type Queue Alarm DelayAnnce Xtnl Alert GrpCoverage Overflow Message Members Exit Line/Pool		F1

	Console Display/Instructions	Additional Information	PC
5	**Enter the extension number of the calling group.**		

	`Group Calling:`
	`Enter extension number`
	`of group`
	
	`Backspace`
	`Exit  Enter`
		Dial or type [*nnnn*].	

6	**Save your entry.**		
	Select **Enter**.		F10
7	**Specify the hunt pattern.**		

	`Group Calling xxxx:`
	`Select one`
	`Circular`
	`Linear`
	
	`Next`
	`Exit  Enter`
		xxxx = number entered in Step 5
		
		Select **Circular** or **Linear**.
			F1
			F2

8	**Continue to assign a hunt pattern to another calling group or go to Step 9.**		
	Select **Next**	Return to Step 7 to continue programming. The next calling group will be displayed on Line 1.	F9
9	**Save your entry.**		
	Select **Enter**.		F10
10	**Return to the System Programming menu.**		
	Select **Exit** three times.		F5 F5 F5

Group Calling Delay Announcement

Use this procedure to designate the announcement device used to play messages to callers while they are waiting in the queue.

Only one announcement device can be designated for each calling group; however, more than one calling group can use the same announcement device. The extension to which the delay announcement device is connected should not be programmed as a calling group member.

If the extension jack or MFM was previously programmed as a regular extension, you must remove all line/trunk button assignments before you designate the extension jack as a delay announcement device.

Summary: Group Calling Delay Announcement

Programmable by	System manager
Mode	All
Idle Condition	Not required
Planning Form	Form 7d, Group Calling
Factory Setting	No delay announcement devices are assigned
Valid Entries	Announcement, No announcement
Inspect	No
Copy Option	No
Console Procedure	Extensions→**More**→Grp Calling→DelayAnnce→ Dial calling group ext. no.→Enter→ Dial ext. no. of announcement device→Enter→Exit→Exit
PC Procedure	F6→PgUp→F4→F2→Type calling group ext. no. →F10→Type ext. no. of announcement device→ F10→F5→F5

Procedure: Group Calling Delay Announcement

	Console Display/Instructions	Additional Information	PC
1	**Select the Extensions menu.**		
	System Programming: > Make a selection System Extensions SysRenumber Options Operator Tables LinesTrunks AuxEquip Exit NightSrvce		F6
2	**Go to the second screen of the Extensions menu.**		
	Extensions: > Make a selection LinesTrunks RestrctCopy Line Copy Account Dial OutCd BIS/HFAI Restriction Call Pickup Exit VoiceSignl	Press **More**.	PgUp
3	**Select Group Calling.**		
	Extensions: Make a selection Ext Status ARS Restrct Group Page Mic Disable Group Cover Remote Frwd Grp Calling Auth Code Exit Delay Frwd		F4

	Console Display/Instructions	Additional Information	PC
4	**Select Delay Announcement.**		

	`Group Calling:`
	`Make a selection`
	`Hunt Type  Queue Alarm`
	`DelayAnnce  Xtnl Alert`
	`GrpCoverage  Overflow`
	`Message  Members`
	`Exit  Line/Pool`
			F2

5	**Enter the extension number of the calling group.**		

	`GrpCall Delay Announce:`
	`Enter extension number`
	`of group`
	
	`Backspace`
	`Exit  Enter`
		Dial or type [*nnnn*].	

6	**Save your entry.**		
	Select **Enter**.		F10
7	**Specify the extension for the delay announcement device.**		

	`Group Calling xxxx:`
	`Enter extension number`
	`of delay announcement`
	
	`Delete`
	`Backspace  Next`
	`Exit  Enter`
		xxxx = number entered in Step 5
		
		SP: “Entering an Extension”	

8	**Assign or remove the delay announcement device extension from the calling group.**		
	Select **Enter** or **Delete**.	You may continue to assign or remove delay announcement device extensions from the calling group by repeating Steps 7 and 8.	F10 F8
9	**Continue to assign the delay announcement device extension to another calling group or go to Step 10.**		
	Select **Next**	Return to Step 7 to continue programming. The next calling group will be displayed on Line 1.	F9
10	**Return to the System Programming menu.**		
	Select **Exit** two times.		F5 F5

Group Coverage Receiver

Use this procedure to assign or remove a calling group as a receiver for a coverage group.

Calling group member assignments must be made before you assign the group as a receiver for a coverage group.

NOTE:
Integrated Administration uses calling group 30 as the default group to cover AUDIX Voice Power.

Summary: Group Coverage Receiver

Programmable by	System manager, Integrated Administration
Mode	All
Idle Condition	Not required
Planning Form	Form 7c, Group Coverage
Factory Setting	Not applicable
Valid Entries	Group numbers
Inspect	Yes
Copy Option	No
Console Procedure	Extensions→**More**→Grp Calling→Grp Coverage→Dial calling group ext. no.→Enter→Dial coverage group no.→Enter→Exit→Exit→Exit
PC Procedure	F6→PgUp→F4→F3→Type calling group ext. no.→Type coverage group no.→F10→F5→F5→F5

Procedure: Group Coverage Receiver

Console Display/Instructions	Additional Information	PC
1 Select the Extensions menu.		
System Programming: > Make a selection System Extensions SysRenumber Options Operator Tables LinesTrunks AuxEquip Exit NightSrvce		F6

	Console Display/Instructions	Additional Information	PC
2	**Go to the second screen of the Extensions menu.**		

	`Extensions: >`
	`Make a selection`
	`LinesTrunks  RestrctCopy`
	`Line Copy  Account`
	`Dial OutCd  BIS/HFAI`
	`Restriction  Call Pickup`
	`Exit  VoiceSignl`
		Press **More**.	PgUp

3	**Select Group Calling.**		

	`Extensions:`
	`Make a selection`
	`Ext Status  ARS Restrct`
	`Group Page  Mic Disable`
	`Group Cover  Remote Frwd`
	`Grp Calling  Auth Code`
	`Exit  Delay Frwd`
			F4

4	**Select Group Coverage.**		

	`Group Calling: >`
	`Make a selection`
	`Hunt Type  Queue Alarm`
	`DelayAnnce  Xtnl Alert`
	`GrpCoverage  Overflow`
	`Message  Members`
	`Exit  Line/Pool`
			F3

5	**Enter the extension number of the calling group.**		

	`Group Calling:`
	`Enter extension number`
	`of group`
	
	`Backspace`
	`Exit  Enter`
		Dial or type [*nnnn*].	↵

6	**Save your entry.**		
	Select **Enter**.		F10
7	**Enter the coverage group for which you want to assign the calling group as receiver (*nn* = 1 to 30).**		

	`Group Calling xxxx:`
	`Enter coverage group`
	`number (1-30)`
	
	`  Delete`
	`Backspace  Next`
	`Exit  Enter`
		xxx = number entered in Step 5
		
		Dial or type [*nn*].
			↵

	Console Display/Instructions	Additional Information	PC
8	**Assign or remove the coverage group as the receiver for the calling group.**		
	Select **Enter** or **Delete**.		F10 F8
		You may continue to assign or remove additional coverage groups as the receiver for the calling group by repeating Steps 7 and 8.	
9	**Continue to assign the coverage group as the receiver for another calling group or go to Step 10.**		
	Select **Next**		F9
		Return to Step 7 to continue programming. The next calling group will be displayed on Line 1.	
10	**Return to the System Programming menu.**		
	Select **Exit** three times.		F5 F5 F5

Group Calling Overflow and Thresholds

Use this procedure to designate another calling group or the QCC queue (Hybrid/PBX only) to receive overflow calls. Call overflow when the number of calls waiting in the queue for a calling group is equal to or greater than the programmed threshold (overflow threshold) or when the time that a call has spent in the queue exceeds the programmed timeout value (overflow threshold time).

If the overflow threshold time is set to 0 seconds (factory setting), then overflow by time is turned off.

Overflow coverage can be provided only by calling groups or the QCC queue (Hybrid/PBX only), not by individual extensions.

A calling group or the QCC queue (Hybrid/PBX only) can provide overflow coverage for more than one calling group; however, which group's calls go to an available member in the overflow calling group is unpredictable.

The factory-set extension number for the QCC Listed Directory Number is 800.

Summary: Group Calling Overflow and Thresholds

Programmable by	System manager
Mode	All
Idle Condition	Not required
Planning Form	Form 7d, Group Calling

Factory Setting	Overflow coverage: none Threshold: 1 call Timeout: 0 sec
Valid Entries	Overflow coverage: Backup extension number Threshold: 1 to 99 calls Timeout: 0 to 900 seconds
Inspect	No
Copy Option	No
Console Procedure	`Extensions`→**More**→`Grp Calling`→`Overflow`→Dial calling group ext. no.→`Enter`→Dial ext. no.→`Enter`→ `Number Based Overflow`→**Drop**→Dial no. of calls→`Enter` →`Time Based Overflow`→**Drop**→Dial no. of seconds→ `Enter`→`Exit`→`Exit`→`Exit`
PC Procedure	[F6]→[PgUp]→[F4]→[F8]→Type calling group ext. no.→[F10] →Type backup ext. no.→[F10]→[F1]→[Alt] + [P]→Type no. of call→[F10]→[F2]→[Alt] + [P]→Type no. of seconds→[F10] →[F5]→[F5]→[F5]

Procedure: Group Calling Overflow and Thresholds

	Console Display/Instructions	Additional Information	PC
1	**Select the Extensions menu.**		

	`System Programming: >`
	`Make a selection`
	`System  Extensions`
	`SysRenumber  Options`
	`Operator  Tables`
	`LinesTrunks  AuxEquip`
	`Exit  NightSrvce`
			[F6]

2	**Go to the second screen of the Extensions menu.**		

	`Extensions: >`
	`Make a selection`
	`LinesTrunks  RestrctCopy`
	`Line Copy  Account`
	`Dial OutCd  BIS/HFAI`
	`Restriction  Call Pickup`
	`Exit  VoiceSignl`
		Press **More**.	[PgUp]

	Console Display/Instructions	Additional Information	PC
3	**Select Group Calling.**		
	Extensions: Make a selection Ext Status ARS Restrct Group Page Mic Disable Group Cover Remote Frwd Grp Calling Auth Code Exit Delay Frwd		F4
4	**Select Overflow.**		
	Group Calling: > Make a selection Hunt Type Queue Alarm DelayAnnce Xtnl Alert GrpCoverage Overflow Message Members Exit Line/Pool		F8
5	**Enter the extension of the calling group.**		
	Group Calling: Enter extension number of group Backspace Exit Enter	Dial or type [*nnnn*].	
6	**Save your entry.**		
	Select **Enter**.		F10
7	**Erase the current extension of the calling group or the QCC Listed Directory Number (xxxx) providing coverage, if assigned.**		
	Group Calling *xxxx*: Enter cover overflow group number or QCC LDN *nnnn* Delete Backspace Exit Enter	*xxxx* = number entered in Step 5 Press **Drop**.	Alt + P
8	**Enter the extension of the calling group or the QCC Listed Directory Number you want to assign for overflow and/or timeout backup coverage.**		
	Group Calling *xxxx*: Enter cover overflow group number or QCC LDN *nnnn* Delete Backspace Exit Enter	*xxxx* = number entered in Step 5 Dial or type [*nnnn*].	

	Console Display/Instructions	Additional Information	PC
9	**Assign or remove the group or directory as overflow backup coverage.**		
	Select **Enter** or		F10
	Delete.		F8
		You may continue to assign or remove additional groups or directories as overflow backup coverage by repeating Steps 7 and 8. If you do not want to change the current number of calls or timeout value, you have finished this procedure. Go to Step 18. If you do not want to change the current number of calls, but want to change the timeout value, go to Step 14	
10	**Select Number Based Overflow.**		
	Group Calling *xxxx*: Select one Number Based Overflow Time Based Overflow Exit	*xxxx* = number entered in Step 5	
			F1
11	**Erase the current number of calls (*nn*).**		
	Group Calling *xxxx*: Assign number of calls before overflow (1-99) *nn* Backspace Exit Enter	*xxxx* = number entered in Step 5	
		Press **Drop**.	Alt + P
12	**Enter the number of calls in the queue before coverage (*nn* = 1 to 99).**		
		Dial or type [*nn*].	
13	**Save your entry.**		
	Select **Enter**.		F10
14	**Select Time Based Overflow.**		
	Group Calling *xxxx*: Select one Number Based Overflow Time Based Overflow Exit	*xxxx* = number entered in Step 5	
			F2

	Console Display/Instructions	Additional Information	PC
15	**Erase the current timeout (*xxx*).**		
	Group Calling *xxxx*: Enter max timeout (sec) before overflow (0-900) *xxx* Backspace Exit Enter	*xxxx* = number entered in Step 5 Press **Drop**.	 Alt + P
16	**Enter the maximum time (in seconds) in the queue before coverage (*xxx* = 0 to 900).**		
		Dial or type [*xxx*].	
17	**Save your entry.**		
	Select **Enter**.		F10
18	**Return to the System Programming menu.**		
	Select **Exit** three times.		F5 F5 F5

Group Calling Message-Waiting Indicator

Use this procedure to designate the extension that will receive message-waiting indications (MWIs) for the calling group.

Only one extension can be designated as a message-waiting receiver for each calling group; however, more than one calling group can use the same message-waiting receiver. The extension assigned as a message-waiting receiver does not have to be a member of the calling group.

Message-waiting indications cannot be sent to the extension assigned to the group unless this option is programmed. The message-waiting receiver cannot distinguish between messages left for the calling group and personal messages.

Summary: Group Calling Message-Waiting Indicator

Programmable by	System manager
Mode	All
Idle Condition	Not required
Planning Form	Form 7d, Group Calling
Factory Setting	No message-waiting receiver assigned
Valid Entries	Extension number
Inspect	No
Copy Option	No

Console Procedure	Extensions→**More**→Grp Calling→Message→Dial calling group ext. no.→Enter→Dial ext. no. for MWI receiver→Enter→Exit→Exit
PC Procedure	F6 →PgUp→F4→F4→Type calling group ext. no.→F10 →Type ext. no. for MWI receiver→ F10→F5→F5

Procedure: Group Calling Message-Waiting Indicator

	Console Display/Instructions	Additional Information	PC
1	**Select the Extensions menu.**		
	System Programming: > Make a selection System Extensions SysRenumber Options Operator Tables LinesTrunks AuxEquip Exit NightSrvce		F6
2	**Go to the second screen of the Extensions menu.**		
	Extensions: > Make a selection LinesTrunks RestrctCopy Line Copy Account Dial OutCd BIS/HFAI Restriction Call Pickup Exit VoiceSignl	Press **More**.	PgUp
3	**Select Group Calling.**		
	Extensions: Make a selection Ext Status ARS Restrct Group Page Mic Disable Group Cover Remote Frwd Grp Calling Auth Code Exit Delay Frwd		F4
4	**Select Message-Waiting Receiver.**		
	Group Calling: > Make a selection Hunt Type Queue Alarm DelayAnnce Xtnl Alert GrpCoverage Overflow Message Members Exit Line/Pool		F4

	Console Display/Instructions	Additional Information	PC
5	**Enter the extension of the calling group.**		

	`Group Calling:`
	`Enter extension number`
	`of group`
	
	`Backspace`
	`Exit  Enter`
		Dial or type [*nnnn*].	

6	**Save your entry.**		
	Select **Enter**.		F10
7	**Erase the current extension (*nnnn*).**		

	`Group Calling` *`xxxx`*`:`
	`Enter message waiting`
	`extension`
	`nnnn`
	
	`Backspace  Next`
	`Exit  Enter`
		xxxx = number entered in Step 5
		
		Press **Drop**.
			Alt + P

8	**Specify the extension.**		
		SP: “Entering an Extension”	
9	**Assign the extension as the receiver for the calling group.**		
	Select **Enter** or **Next**		F10 F9
		Use **Next** to assign an extension as receiver for the next calling group. Return to Step 7.	
10	**Return to the System Programming menu.**		
	Select **Exit** two times.		F5 F5

Group Calling Calls-In-Queue Alarm Threshold

Use this procedure to specify the number of unanswered calls that wait in the calling group queue before group members are notified with either an external alert or a light on the telephone. Group members are notified when the number of calls waiting in the queue is equal to or greater than the programmed threshold.

Summary: Group Calling Calls-In-Queue Alarm Threshold

Programmable by	System manager
Mode	All
Idle Condition	Not required
Planning Form	Form 7d, Group Calling
Factory Setting	1 call
Valid Entries	1 to 99
Inspect	No
Copy Option	No
Console Procedure	Extensions→**More**→Grp Calling→Queue Alarm→Dial calling group ext. no.→Enter→**Drop**→Dial no. of calls→Enter→Exit→Exit
PC Procedure	F6→PgUp→F4→F6→Type calling group ext. no.→F10→Alt + P→Type no. of calls→F10→F5→F5

Procedure: Group Calling Calls-In-Queue Alarm Threshold

	Console Display/Instructions	Additional Information	PC
1	**Select the Extensions menu.**		
	System Programming: > Make a selection System Extensions SysRenumber Options Operator Tables LinesTrunks AuxEquip Exit NightSrvce		F6
2	**Go to the second screen of the Extensions menu.**		
	Extensions: > Make a selection LinesTrunks RestrctCopy Line Copy Account Dial OutCd BIS/HFAI Restriction Call Pickup Exit VoiceSignl	Press **More**.	PgUp

	Console Display/Instructions	Additional Information	PC
3	**Select Group Calling.**		
	Extensions: Make a selection Ext Status ARS Restrct Group Page Mic Disable Group Cover Remote Frwd Grp Calling Auth Code Exit Delay Frwd		F4
4	**Select Queue Alarm.**		
	Group Calling: > Make a selection Hunt Type Queue Alarm DelayAnnce Xtnl Alert GrpCoverage Overflow Message Members Exit Line/Pool		F6
5	**Enter the extension of the calling group.**		
	Group Calling: Enter extension number of group Backspace Exit Enter	Dial or type [*nnnn*].	
6	**Save your entry.**		
	Select **Enter**.		F10
7	**Erase the current number of calls (*nn*).**		
	Group Calling *xxxx*: Enter number calls before alarm (1-99) *nn* Backspace Next Exit Enter	*xxxx* = number entered in Step 5 Press **Drop**.	Alt + P
8	**Enter the number of calls to be in the queue before the alarm threshold notification (*nn* = 1 to 99).**		
		Dial or type [*nn*].	

	Console Display/Instructions	Additional Information	PC
9	**Save your entry.**		
	Select Enter or Next		F10 F9
		Use Next program the next calling group. Return to Step 7.	
10	**Return to the System Programming menu.**		
	Select Exit two times.		F5 F5

Group Calling External Alert for Calls-In-Queue Alarm

Use this procedure to designate the external alert device used to notify calling group members when the number of calls in the queue reaches the programmed threshold.

Only one external alert device can be designated for each calling group. Since the external alert signal is continuous, it is recommended that only light-type external alert devices be designated for the Calls-in-Queue alarm.

Summary: Group Calling External Alert for Calls-In-Queue Alarm

Programmable by	System manager
Mode	All
Idle Condition	Not required
Planning Form	Form 7d, Group Calling
Factory Setting	Not applicable
Valid Entries	Extension number
Inspect	No
Copy Option	No
Console Procedure	Extensions→**More**→Grp Calling→Xtnl Alert→Dial calling group ext. no.→Enter→**Drop**→Dial ext. no. for alert→Enter→Exit→Exit
PC Procedure	F6→PgUp→F4→F7→Type calling group ext. no.→F10→Alt + P→Type ext. no. for alert→F10→F5→F5

Procedure: Group Calling External Alert for Calls-In-Queue Alarms

	Console Display/Instructions	Additional Information	PC
1	**Select the Extensions menu.**		
	System Programming: > Make a selection System Extensions SysRenumber Options Operator Tables LinesTrunks AuxEquip Exit NightSrvce		F6
2	**Go to the second screen of the Extensions menu.**		
	Extensions: > Make a selection LinesTrunks RestrctCopy Line Copy Account Dial OutCd BIS/HFAI Restriction Call Pickup Exit VoiceSignl	Press **More**.	PgUp
3	**Select Group Calling.**		
	Extensions: Make a selection Ext Status ARS Restrct Group Page Mic Disable Group Cover Remote Frwd Grp Calling Auth Code Exit Delay Frwd		F4
4	**Select External Alert.**		
	Group Calling: > Make a selection Hunt Type Queue Alarm DelayAnnce Xtnl Alert GrpCoverage Overflow Message Members Exit Line/Pool		F7
5	**Enter the extension of the calling group.**		
	Group Calling: Enter extension number of group Backspace Exit Enter	Dial or type [*nn*].	

	Console Display/Instructions	Additional Information	PC
6	**Save your entry.**		
	Select **Enter**.		F10
7	**Erase the current external alert extension (*nnnn*) if assigned.**		
	Group Calling *xxxx*: Enter external alert extension *nnnn* Backspace Next Exit Enter	*xxxx* = number entered in Step 5 Press **Drop**.	 Alt + P
8	**Specify the extension.**		
		If no DSS is attached: **SP:** "Entering an Extension"	
9	**Save your entry.**		
	Select **Enter**. **Next**	 Use **Next** to program the next calling group. Return to Step 7.	F10 F9
10	**Return to the System Programming menu.**		
	Select **Exit** two times.		F5 F5

Group Type

Use this procedure to determine whether or not the system automatically logs in members of a calling group after a power failure. This setting also determines the type of voice messaging interface when the calling group is used to connect voice messaging or automated attendant applications. The settings are listed below.

- **Automatic Log Out**. Used for calling groups to specify that the system does not automatically log in calling group members after a power failure. Calling group members must manually log themselves into the group.
- **Automatic Log In**. Used for calling groups that consist of fax machines or data stations (also called data hunt groups) to specify that the system automatically logs in calling group members after a power failure. This setting can also be used for calling groups consisting of telephones.

- **Integrated VMI**. Used when a voice messaging system that requires special signaling for integrated operation (for example, AUDIX Voice Power, IS II/III, or MERLIN MAIL® Voice Messaging System) is connected to one or more extension jacks assigned to a calling group. The system automatically logs in the group members after a power failure.
- **Generic VM**. Used when a voice messaging system that does not need special signaling (for example, AT&T Attendant) is connected to one or more extension jacks assigned to a calling group. The system automatically logs in the group members after a power failure.

NOTE:
In Release 3.1 and later, any port programmed as a VMI port is programmed with:

- outward restriction on
- a default FRL of 0 (the most restrictive)
- a default Disallowed List (List 7) that includes the numbers frequently associated with fraud

If the system manager changes a VMI port to an non-VMI port, the restrictions are not turned off. To remove restrictions, the system manager must change them thorough system programming.

Summary: Group Type

Programmable by	System manager
Mode	All
Idle Condition	Not required
Planning Form	Form 7d, Group Calling
Factory Setting	Automatic Log Out
Valid Entries	Automatic log in, Automatic log out, Integrated VMI, Generic VMI
Inspect	No
Copy Option	No
Console Procedure	`Extensions`→**More**→`Grp Calling`→**More**→`Group`→Type Dial calling group ext. no.→`Enter`→Specify login type→ `Enter`→`Enter`→`Exit`→`Exit`→`Exit`
PC Procedure	[F6]→[PgUp]→[F4]→[PgUp]→Type calling group ext. no→ Specify login type→[F10]→[F5]→[F5]→[F5]

Procedure: Group Type

	Console Display/Instructions	Additional Information	PC
1	**Select the Extensions menu.**		
	System Programming: > Make a selection System Extensions SysRenumber Options Operator Tables LinesTrunks AuxEquip Exit NightSrvce		F6
2	**Go to the second screen of the Extensions menu.**		
	Extensions: > Make a selection LinesTrunks RestrctCopy Line Copy Account Dial OutCd BIS/HFAI Restriction Call Pickup Exit VoiceSignl	Press **More**.	PgUp
3	**Select Group Calling.**		
	Extensions: Make a selection Ext Status ARS Restrct Group Page Mic Disable Group Cover Remote Frwd Grp Calling Auth Code Exit Delay Frwd		F4
4	**Go to the second screen of the Group Calling menu.**		
	Group Calling: > Make a selection Hunt Type Queue Alarm DelayAnnce Xtnl Alert GrpCoverage Overflow Message Members Exit Line/Pool	Press **More**.	PgUp
5	**Select Group Type.**		
	Group Calling: Make a selection Group Type Exit		F1

	Console Display/Instructions	Additional Information	PC
6	**Enter the extension of the group.**		

	`Group Calling:`
	`Enter extension number`
	`of group`
	
	`Backspace`
	`Exit  Enter`
		Dial or type [*nnnn*].	

7	**Save your entry.**		
	Select **Enter**.		F10
8	**Specify the type of login for the group that occurs after a power failure.**		

	`Group Calling xxxx:`
	`Select One`
	`Auto Login`
	`Auto Logout`
	`Integ VMI`
	`Generic VMI  Next`
	`Exit  Enter`
		xxxx = number entered in Step 6
		
		Press the button or function key next to your selection.	

9	**Save your entry.**		
	Select **Enter** or **Next**	Use **Next** program the next calling group. Return to Step 8.	F10 F9
10	**Return to the System Programming menu.**		
	Select **Exit** three times.		F5 F5 F5

System Features

This section contains programming instructions for the optional system features that affect all or most system users and includes the following:

- Transfer Return Time
- One-Touch Transfer/Hold
- Transfer Audible
- Type of Transfer
- Camp-On Return Time
- Call Park Return Time
- Delay Ring Interval
- Automatic Callback Interval
- Extension Status
- SMDR Language
- SMDR Call Report Format
- SMDR Call Length
- SMDR Calls Recorded on Call Report
- SMDR Account Code Format
- Inside Dial Tone
- Reminder Service Cancel
- Redirect Outside Calls to Unassigned Extension Numbers
- Host System Dial Codes for Behind Switch Mode
- Recall Timer
- Allowed Lists
- Assign Allowed Lists to Telephones
- Disallowed Lists
- Assign Disallowed Lists to Telephones

Transfer Return Time

Use this procedure to specify the number of times the telephone rings before a call transferred to another inside telephone is returned to the originator. A setting of 0 means that transferred calls are never returned to the originator.

NOTE:
The transfer return time should not be set to 0 in a system with single-line telephones.

Summary: Transfer Return Time

Programmable by	System Manager
Mode	All
Idle Condition	Not required
Planning Form	Form 8a, System Features
Factory Setting	4 rings (Integrated Administration: 6 rings)
Valid Entries	0 to 9 rings
Inspect	No
Copy Option	No
Console Procedure	Options→Transfer→Return Time→**Drop**→Dial no. of rings→Enter→Exit→Exit
PC Procedure	F7→F1→F1→Alt + P→Type no. of rings→F10→F5→F5

Procedure: Transfer Return Time

Console Display/Instructions	Additional Information	PC
1 Select the Options menu.		
System Programming: > Make a selection System Extensions SysRenumber Options Operator Tables LinesTrunks AuxEquip Exit NightSrvce		F7

	Console Display/Instructions	Additional Information	PC
2	**Select Transfer.**		
	Options: > Make a selection Transfer Callback CampOn Ext Status CallParkRtn SMDR Delay Ring InsideDial Exit ReminderSrv		F1
3	**Select Return Time.**		
	Transfer Make a selection Return Time One Touch Audible Type Exit		F1
4	**Erase the current number of rings (*x*).**		
	Transfer Return: Enter number rings (0-9) *x* Backspace Exit Enter	Press **Drop**.	Alt + P
5	**Enter the number of rings before a transferred call is returned to the originator (*n* = 0 to 9).**		
		Use 0 to indicate that calls are not returned. Dial or type [*n*].	
6	**Save your entry.**		
	Select **Enter**.		F10
7	**Return to the System Programming menu.**		
	Select **Exit** two times.		F5 F5

One-Touch Transfer/One-Touch Hold

Use this procedure to assign the One-Touch Transfer or One-Touch Hold feature.

One-Touch Transfer allows users to initiate transfers to another extension by pressing an Auto Dial or DSS button for that extension. If the One-Touch Transfer feature is assigned, you must also specify whether the transfer completion is manual (the user has to press another button to complete the transfer) or automatic (the transfer is completed automatically).

The One-Touch Transfer feature is not available on single-line telephones.

One-Touch Hold applies to incoming central office calls only. When the user presses an Auto Dial or DSS button to initiate a transfer, the outside caller is put on hold. The system automatically selects an intercom facility and dials the transfer destination. There is no transfer return function with this method. Consequently, if the transfer destination does not answer or is busy, the user who initiates the transfer must notify the outside caller, or the outside caller will remain on hold.

One-Touch Hold is the factory setting in Behind Switch mode only.

Summary: One-Touch Transfer/Hold

Programmable by	System Manager
Mode	All
Idle Condition	Not required
Planning Form	Form 8a, System Features
Factory Setting	One-Touch Transfer, automatic completion (One-Touch Hold is the factory setting in Behind Switch mode.)
Valid Entries	Transfer, Hold
Inspect	No
Copy Option	No

Console Procedure	To program One-Touch Transfer:
	`Options→Transfer→One Touch→Transfer→Enter→Manual` or `Automatic→Enter→Exit→Exit`
	To program One-Touch Hold:
	`Options→Transfer→One Touch→Hold→Enter→Exit→Exit`

PC Procedure	To program One-Touch Transfer: F7 → F1 → F2 → F1 → F10 → F1 or F2 → F10 → F5 → F5 To program One-Touch Hold: F7 → F1 → F2 → F2 → F10 → F5 → F5

Procedure: One-Touch Transfer/Hold

	Console Display/Instructions	Additional Information	PC
1	**Select the Options menu.**		

	`System Programming: >`
	`Make a selection`
	`System  Extensions`
	`SysRenumber  Options`
	`Operator  Tables`
	`LinesTrunks  AuxEquip`
	`Exit  NightSrvce`
			F7

2	**Select Transfer.**		

	`Options: >`
	`Make a selection`
	`Transfer  Callback`
	`CampOn  Ext Status`
	`CallParkRtn  SMDR`
	`Delay Ring  InsideDial`
	`Exit  ReminderSrv`
			F1

3	**Select One Touch.**		

	`Transfer`
	`Make a selection`
	`Return Time`
	`One Touch`
	`Audible`
	`Type`
	`Exit`
			F2

	Console Display/Instructions	Additional Information	PC
4	**Specify transfer or hold.**		

	`One Touch Call Handling:`
	`Select One`
	`Transfer`
	`Hold`
	
	`Exit  Enter`
		Select **Transfer** or **Hold**.	F1
			F2

5	**Save your entry.**		
	Select **Enter**.	If you selected **Transfer**, continue with Step 6. If you selected **Hold**, you have finished this procedure. Go to Step 8.	F10
6	**Specify manual or automatic transfer completion.**		

	`Transfer Completion:`
	`Select one`
	`Manual`
	`Automatic`
	
	`Exit  Enter`
		Select **Manual** or **Automatic**.	F1
			F2

7	**Save your entry.**		
	Select **Enter**.		F10
8	**Return to the System Programming menu.**		
	Select **Exit** two times.		F5 F5

Transfer Audible

Use this procedure to specify whether an outside caller hears ringing (also called ringback) or Music on Hold while being transferred. Inside callers always hear ringback during a transfer.

NOTE:
If you use equipment that rebroadcasts music or other copyrighted materials, you may be required to obtain a copyright license from and pay license fees to a third party (such as the American Society of Composers, Artists, and Producers or Broadcast Music Incorporated). Magic on Hold requires no such license and can be purchased from AT&T.

Summary: Transfer Audible

Programmable by	System Manager
Mode	All
Idle Condition	Not required
Planning Form	Form 8a, System Features
Factory Setting	Music on Hold
Valid Entries	Music on Hold, Ringback
Inspect	No
Copy Option	No
Console Procedure	Options→Transfer→Audible→Music on Hold or Ringback→Enter→Exit→Exit
PC Procedure	F7→F1→F3→F1 or F2→F10→F5→F5

Procedure: Transfer Audible

	Console Display/Instructions	Additional Information	PC
1	**Select the Options menu.**		
	System Programming: > Make a selection System Extensions SysRenumber Options Operator Tables LinesTrunks AuxEquip Exit NightSrvce		F7
2	**Select Transfer.**		
	Options: > Make a selection Transfer Callback CampOn Ext Status CallParkRtn SMDR Delay Ring InsideDial Exit ReminderSrv		F1
3	**Select Transfer Audible.**		
	Transfer Make a selection Return Time One Touch Audible Type Exit		F3

	Console Display/Instructions	Additional Information	PC
4	**Specify whether the outside caller hears music or ringing while being transferred.**		

	`Transfer Audible:`
	`Select one`
	`Music On Hold`
	`Ringback`
	
	`Exit  Enter`
		Select **Music On Hold** or **Ringback**.	F1
			F2

5	**Save your entry.**		
	Select **Enter**.		F10
6	**Return to the System Programming menu.**		
	Select **Exit** two times.		F5 F5

Type of Transfer

Use this procedure to specify whether the system automatically selects an Intercom or System Access Ring or Voice button when the **Transfer** button, or an Auto Dial or DSS button (for One-Touch Transfer) is pressed.

Summary: Type of Transfer

Programmable by	System Manager
Mode	All
Idle Condition	Not required
Planning Form	Form 8a, System Features
Factory Setting	Ring button (Intercom or System Access) is automatically selected
Valid Entries	Voice Announce, Ring
Inspect	No
Copy Option	No
Console Procedure	`Options`→`Transfer`→`Type`→`Voice Announce` or `Ring`→`Enter`→`Exit`→`Exit`
PC Procedure	F7 → F1 → F4 → F1 or F2 → F10 → F5 → F5

Procedure: Type of Transfer

	Console Display/Instructions	Additional Information	PC
1	**Select the Options menu.**		
	System Programming: > Make a selection System Extensions SysRenumber Options Operator Tables LinesTrunks AuxEquip Exit NightSrvce		F7
2	**Select Transfer.**		
	Options: > Make a selection Transfer Callback CampOn Ext Status CallParkRtn SMDR Delay Ring InsideDial Exit ReminderSrv		F1
3	**Select Transfer Type.**		
	Transfer Make a selection Return Time One Touch Audible Type Exit		F4
4	**Specify whether a voice or ring button is automatically selected.**		
	Type of Transfer: Select one Voice Announce Ring Exit Enter	Select **Voice Announce** or **Ring**.	F1 F2
5	**Save your entry.**		
	Select **Enter**.		F10
6	**Return to the System Programming menu.**		
	Select **Exit** two times.		F5 F5

Camp-On Return Time

Use this procedure to specify the number of seconds before a camped-on call (a call transferred to a busy telephone with the Camp-On feature) is returned to the originator.

Summary Camp-On Return Time:

Programmable by	System Manager
Mode	All
Idle Condition	Not required
Planning Form	Form 6f, System Features
Factory Setting	90 seconds
Valid Entries	30 to 300 seconds, in 10-second increments
Inspect	No
Copy Option	No
Console Procedure	Options→CampOn→**Drop**→Dial no. of seconds→Enter→Exit
PC Procedure	F7→F2→Alt + P→Type no. of seconds→F10→F5

Procedure: Camp-On Return Time

	Console Display/Instructions	Additional Information	PC
1	**Select the Options menu.**		
	System Programming: > Make a selection System Extensions SysRenumber Options Operator Tables LinesTrunks AuxEquip Exit NightSrvce		F7
2	**Select Camp-On.**		
	Options: > Make a selection Transfer Callback CampOn Ext Status CallParkRtn SMDR Delay Ring InsideDial Exit ReminderSrv		F2

	Console Display/Instructions	Additional Information	PC
3	**Erase the current number of seconds (*xxx*).**		

	`Camp On:`
	`Enter number of seconds`
	`(30-300), increments 10)`
	xxx
	
	`Backspace`
	`Exit  Enter`
		Press **Drop**.	Alt + P

4	**Enter the number of seconds before a camped-on call returns to the originator (*nnn* = 30 to 300).**		
		Dial or type [*nnn*].	
5	**Save your entry.**		
	Select `Enter`.		F10
6	**Return to the System Programming menu.**		
	Select `Exit`.		F5

Call Park Return Time

Use this procedure to specify the number of seconds before a call put on hold with the Park feature is returned to the originator.

Summary: Call Park Return Time

Programmable by	System Manager
Mode	All
Idle Condition	Not required
Planning Form	Form 8a, System Features
Factory Setting	180 seconds
Valid Entries	30 to 300 seconds, in 10-second increments
Inspect	No
Copy Option	No
Console Procedure	`Options`→`CallParkRtn`→**Drop**→Dial no. of seconds→`Enter`→`Exit`
PC Procedure	F7 → F3 → Alt + P → Type no. of seconds → F5 → F5

Procedure: Call Park Return Time

	Console Display/Instructions	Additional Information	PC
1	**Select the Options menu.**		
	System Programming: > Make a selection System Extensions SysRenumber Options Operator Tables LinesTrunks AuxEquip Exit NightSrvce		F7
2	**Select Call Park Return.**		
	Options: > Make a selection Transfer Callback CampOn Ext Status CallParkRtn SMDR Delay Ring InsideDial Exit ReminderSrv		F3
3	**Erase the current number of seconds (*xxx*).**		
	Call Park Return Time: Enter time before return (30-300 sec increment 10) *xxx* Backspace Exit Enter	Press **Drop**.	Alt + P
4	**Enter the number of seconds before a parked call returns to the originator (*nnn* = 30 to 300).**		
		Dial or type [*nnn*].	
5	**Save your entry.**		
	Select **Enter**.		F10
6	**Return to the System Programming menu.**		
	Select **Exit**.		F5

Delay Ring Interval

Use this procedure to specify the number of rings for the delay ring interval. The delay ring interval is applied when a primary, secondary, or group cover button is set to delayed ring.

Summary: Delay Ring Interval

Programmable by	System Manager
Mode	All
Idle Condition	Not required
Planning Form	Form 8a, System Features
Factory Setting	2 rings
Valid Entries	1 to 6 rings
Inspect	No
Copy Option	No
Console Procedure	Options→Delay Ring→**Drop**→Dial no. of rings→Enter →Exit
PC Procedure	F7 → F4 → Alt + P → Type no. of rings → F10 → F5

Procedure: Delay Ring Interval

	Console Display/Instructions	Additional Information	PC
1	**Select the Options menu.**		
	System Programming: > Make a selection System Extensions SysRenumber Options Operator Tables LinesTrunks AuxEquip Exit NightSrvce		F7
2	**Select Delay Ring.**		
	Options: > Make a selection Transfer Callback CampOn Ext Status CallParkRtn SMDR Delay Ring InsideDial Exit ReminderSrv		F4

	Console Display/Instructions	Additional Information	PC
3	**Erase the current number of rings (*x*).**		

	`Delay Ring:`
	`Enter number rings (1-6)`
	
	x
	
	`Backspace`
	`Exit  Enter`
		Press **Drop**.	Alt + P

4	**Enter the number of rings for the delay ring interval (*n* = 1 to 6).**		
		Dial or type [*n*].	
5	**Save your entry.**		
	Select `Enter`.		F10
6	**Return to the System Programming menu.**		
	Select `Exit`.		F5

Automatic Callback Interval

Use this procedure to specify the number of times the telephone rings at the originator's telephone before the system cancels a Callback request.

Summary: Automatic Callback Interval

Programmable by	System Manager
Mode	All
Idle Condition	Not required
Planning Form	Form 8a, System Features
Factory Setting	3 rings
Valid Entries	1 to 6 rings
Inspect	No
Copy Option	No
Console Procedure	`Options`→`Callback`→**Drop**→Dial no. of rings→`Enter`→`Exit`
PC Procedure	F7 → F6 → Alt + P → Type no. of rings → F10 → F5

Procedure: Automatic Callback Interval

	Console Display/Instructions	Additional Information	PC
1	**Select the Options menu.**		
	System Programming: > Make a selection System Extensions SysRenumber Options Operator Tables LinesTrunks AuxEquip Exit NightSrvce		F7
2	**Select Automatic Callback Interval.**		
	Options: > Make a selection Transfer Callback CampOn Ext Status CallParkRtn SMDR Delay Ring InsideDial Exit ReminderSrv		F6
3	**Erase the current number of rings (*x*).**		
	Automatic Callback: Enter number callback rings (1-6) *x* Backspace Exit Enter	Press **Drop**.	Alt + P
4	**Enter the number of rings before the system cancels the automatic callback request (*n* = 1 to 6).**		
		Dial or type [*n*].	
5	**Save your entry.**		
	Select **Enter**.		F10
6	**Return to the System Programming menu.**		
	Select **Exit**.		F5

Extension Status

Use this procedure to specify whether the Extension Status (ES) feature is used in Hotel mode or Group Calling/Call Management System (CMS) mode.

The calling mode affects the meaning of the LEDs and the use of Auto Dial or DSS buttons when the DLC operator position is in Extension Status mode.

In Hotel mode, telephones are restricted from making calls in Extension Status states 1 and 2 (ES1 and ES2). In Group Calling/CMS mode, ES states reflect member or agent status without restricting the telephones. In the Group Calling/CMS mode, the Extension Status feature is used by the agents to log in and out, and by the supervisor to see agent status.

Summary: Extension Status

Programmable by	System Manager
Mode	All
Idle Condition	Not required
Planning Form	Form 8a, System Features
Factory Setting	Group Calling/CMS mode
Valid Entries	Group Calling/CMS mode, Hotel mode
Inspect	No
Copy Option	No
Console Procedure	`Options`→`Ext Status`→`Hotel` or `GrpCall/CMS`→`Enter`→`Exit`
PC Procedure	F7 → F7 → F1 or F2 → F10 → F5

Procedure: Extension Status

	Console Display/Instructions	Additional Information	PC
1	**Select the Options menu.**		

	`System Programming: >`
	`Make a selection`
	`System  Extensions`
	`SysRenumber  Options`
	`Operator  Tables`
	`LinesTrunks  AuxEquip`
	`Exit  NightSrvce`
			F7

2	**Select Extension Status.**		

	`Options: >`
	`Make a selection`
	`Transfer  Callback`
	`CampOn  Ext Status`
	`CallParkRtn  SMDR`
	`Delay Ring  InsideDial`
	`Exit  ReminderSrv`
			F7

	Console Display/Instructions	Additional Information	PC
3	**Specify the extension status mode.**		

	`Ext Status Button Type:`
	`Select one`
	`Hotel`
	`GrpCall/CMS`
	
	`Exit  Enter`
		Select **Hotel** or **GrpCall/CMS**.	F1
			F2

4	**Save your entry.**		
	Select **Enter**.		F10
5	**Return to the System Programming menu.**		
	Select **Exit**.		F5

SMDR Language

Use this procedure to change the language of the SMDR reports. It applies to Releases 1.1, 2.0, 2.1 and 3.0 only. The default report language is the same as that set for the system language. See “System Language.”

Summary: SMDR Language

Programmable by	System Manager
Mode	All
Idle Condition	Not required
Planning Form	Form 1, System Planning
Factory Setting	English (matches System Language setting)
Valid Entries	English, French, Spanish
Inspect	No
Copy Option	No
Console Procedure	**More**→Language→SMDR→Select language→Enter→Exit
PC Procedure	PgUp→F6→F3→Select language →F10→F5

Procedure: SMDR Language

	Console Display/Instructions	Additional Information	PC
1	**Go to the second screen of the System Programming menu.**		
	System Programming: > Make a selection System Extensions SysRenumber Options Operator Tables LinesTrunks AuxEquip Exit NightSrvce	Press **More**.	PgUp
2	**Select Language.**		
	System Programming: Make a selection Labeling Language Data Print Cntr-Prg Exit		F6
3	**Select SMDR.**		
	Language: Make a selection SystemLang Extensions SMDR Printer Exit	Program the system language first. See “System Language.”	F3
4	**Specify the SMDR language.**		
	SMDR Language: Select one English French Spanish Exit Enter	Select English, French, or Spanish.	F1 F2 F3
5	**Save your entry.**		
	Select Enter.		F10
6	**Return to the System Programming menu.**		
	Select Exit.		F5

SMDR Call Report Format

Use this procedure to specify whether the SMDR call reports are printed in Basic format or ISDN format. In ISDN format, automatic number identification (ANI) or Caller ID information appears in the Calling Number field in place of IN (which appears in the Basic report format). The call recording type for these calls is I in ISDN format and C in Basic format.

ISDN format should be used only in conjunction with automatic number identification (ANI) or Caller ID service subscription.

Summary: SMDR Call Report Format

Programmable by	System Manager
Mode	All
Idle Condition	Not required
Planning Form	Form 8a, System Features
Factory Setting	Basic format
Valid Entries	Basic, ISDN
Inspect	No
Copy Option	No
Console Procedure	`Options`→`SMDR`→`Format`→`Basic SMDR` or `ISDNSMDR`→ `Enter`→`Exit`→`Exit`
PC Procedure	F7 → F8 → F1 → F1 or F2 → F10 → F5 → F5

Procedure: SMDR Call Report Format

Console Display/Instructions	Additional Information	PC
1 Select the Options menu.		

`System Programming: >`
`Make a selection`
`System Extensions`
`SysRenumber Options`
`Operator Tables`
`LinesTrunks AuxEquip`
`Exit NightSrvce`
		F7

	Console Display/Instructions	Additional Information	PC
2	**Select SMDR.**		
	Options: > Make a selection Transfer Callback CampOn Ext Status CallParkRtn SMDR Delay Ring InsideDial Exit ReminderSrv		F8
3	**Select Call Report Format.**		
	Station Message Record: Make a selection Format Auth Code Call Length Call Report New Page Exit		F1
4	**Specify a format for the SMDR reports.**		
	SMDR Format: Select one Basic SMDR ISDN SMDR Exit Enter	Select **Basic SMDR** or **ISDN SMDR**.	F1 F2
5	**Save your entry.**		
	Select **Enter**.		F10
6	**Return to the System Programming menu.**		
	Select **Exit** two times.		F5 F5

SMDR Call Length

Use this procedure to set the minimum time length of a call before it is recorded on SMDR call reports.

NOTE:
If the majority of lines/trunks are PRI, the recommended call length is 1. See *Feature Reference* for more information.

Summary: SMDR Call Length

Programmable by	System Manager
Mode	All
Idle Condition	Not required
Planning Form	Form 8a, System Features
Factory Setting	40 seconds
Valid Entries	0 to 255 seconds
Inspect	No
Copy Option	No
Console Procedure	Options→SMDR→Call Length→**Drop**→Dial no. of seconds→Enter→Exit→Exit
PC Procedure	F7→F8→F2→Alt + P→Type no. of seconds→F10→F5→F5

Procedure: SMDR Call Length

	Console Display/Instructions	Additional Information	PC
1	**Select the Options menu.**		
	System Programming: > Make a selection System Extensions SysRenumber Options Operator Tables LinesTrunks AuxEquip Exit NightSrvce		F7
2	**Select SMDR.**		
	Options: > Make a selection Transfer Callback CampOn Ext Status CallParkRtn SMDR Delay Ring InsideDial Exit ReminderSrv		F8
3	**Select Call Length.**		
	Station Message Record: Make a selection Format Auth Code Call Length Call Report New Page Exit	New Page inserts a page break in the report.	F2

	Console Display/Instructions	Additional Information	PC
4	**Erase the current number of seconds (*xxx*).**		

	`SMDR Minimum Time:`
	`Enter minimum call time`
	`(0-255)`
	xxx
	
	`Backspace`
	`Exit  Enter`
		Press **Drop**.	Alt + P

5	**Enter the minimum number of seconds to elapse before calls are recorded on the SMDR reports (nnn = 0 to 255).**		
		Dial or type [*nnn*].	
6	**Save your entry.**		
	Select `Enter`.		F10
7	**Return to the System Programming menu.**		
	Select `Exit` two times.		F5 F5

SMDR Calls Recorded on Call Report

Use this procedure to specify whether SMDR information should be recorded for both incoming and outgoing calls or for outgoing calls only.

Summary: SMDR Calls Recorded on Call Report

Programmable by	System Manager
Mode	All
Idle Condition	Not required
Planning Form	Form 8a, System Features
Factory Setting	Incoming and outgoing
Valid Entries	In/Out, Out Only
Inspect	No
Copy Option	No
Console Procedure	`Options`→`SMDR`→`Call Report`→`In/Out` or `Out Only`→ `Enter`→`Exit`→`Exit`
PC Procedure	F7 → F8 → F3 → F1 or F2 → F10 → F5 → F5

Procedure: SMDR Calls Recorded on Call Report

	Console Display/Instructions	Additional Information	PC
1	**Select the Options menu.**		
	System Programming: > Make a selection System Extensions SysRenumber Options Operator Tables LinesTrunks AuxEquip Exit NightSrvce		F7
2	**Select SMDR.**		
	Options: > Make a selection Transfer Callback CampOn Ext Status CallParkRtn SMDR Delay Ring InsideDial Exit ReminderSrv		F8
3	**Select Call Report.**		
	Station Message Record: Make a selection Format Auth Code Call Length Call Report New Page Exit	New Page inserts a page break in the report.	F3
4	**Specify whether SMDR information is recorded for both incoming and outgoing calls or for outgoing calls only.**		
	SMDR Call Report: Select one In/Out Out Only Exit Enter	Select In/Out or Out Only.	F1 F2
5	**Save your entry.**		
	Select Enter.		F10
6	**Return to the System Programming menu.**		
	Select Exit two times.		F5 F5

SMDR Account Code Format

For calls made using an authorization code, SMDR can be programmed to either have the “home extension” or the actual authorization codes recorded in the Account Code field if no Account Code is entered. Account Code overrides the Authorization Code entry in the SMDR record when both features are used.

Summary: SMDR Account Code Format

Programmable by	System Manager
Mode	All
Idle Condition	Not required
Planning Form	Form 6h, Authorization Codes
Factory Setting	Home Extension Number
Valid Entries	Home Extension Number, Authorization Code
Inspect	No
Copy Option	No
Console Procedure	Options→SMDR→Auth Code→Home Extension Number or Authorization Code→Enter→Exit→Exit
PC Procedure	F7→F8→F6→F1 or F2→F10→F5→F5

Procedure: SMDR Account Code Format

Console Display/Instructions	Additional Information	PC
1 Select the Options menu.		
System Programming: > Make a selection System Extensions SysRenumber Options Operator Tables LinesTrunks AuxEquip Exit NightSrvce		F7
2 Select SMDR.		
Options: > Make a selection Transfer Callback CampOn Ext Status CallParkRtn SMDR Delay Ring InsideDial Exit ReminderSrv		F8

	Console Display/Instructions	Additional Information	PC
3	**Select Authorization Code.**		

	`Station Message Record:`
	`Make a selection`
	`Format  Auth Code`
	`Call Length`
	`Call Report`
	`New Page`
	`Exit`
		New Page inserts a page break in the report.	F6

4	**Specify whether the home extension number or the authorization code will be recorded.**		

	`Account Code Format:`
	`Select One`
	`Home Extension Number`
	`Authorization Code`
	
	`Exit  Enter`
		Select Home Extension Number or Authorization Code	F1
			F2

5	**Save your entry.**		
	Press Enter.		F10

Inside Dial Tone

Use this procedure to set the inside (system) dial tone to be either different from, or the same as, the outside line/trunk dial tone.

NOTE:
The inside dial tone must be the same as the outside dial tone when the internal dial tone is not recognized by software applications or modems.

Summary: Inside Dial Tone

Programmable by	System Manager
Mode	All
Idle Condition	Not required
Planning Form	Form 8a, System Features
Factory Setting	Inside dial tone is different from outside dial tone
Valid Entries	Inside, Outside
Inspect	No
Copy Option	No
Console Procedure	Options→InsideDial→Inside or Outside→Enter→Exit
PC Procedure	F7→F9→F1 or F2→F10→F5

Procedure: Inside Dial Tone

	Console Display/Instructions	Additional Information	PC
1	**Select the Options menu.**		
	System Programming: > Make a selection System Extensions SysRenumber Options Operator Tables LinesTrunks AuxEquip Exit NightSrvce		F7
2	**Select Inside Dial Tone.**		
	Options: > Make a selection Transfer Callback CampOn Ext Status CallParkRtn SMDR Delay Ring InsideDial Exit ReminderSrv		F9
3	**Specify which dial tone you want for inside.**		
	Intercom Dial Tone: Select One Inside Outside Exit Enter	Select **Inside** or **Outside**.	F1 F2
4	**Save your entry.**		
	Select **Enter**.		F10
5	**Return to the System Programming menu.**		
	Select **Exit**.		F5

Reminder Service Cancel

Use this procedure to set the time of day when all programmed Reminder Service calls are automatically canceled.

To deactivate Reminder Service Cancel, erase the currently programmed time and do not enter a new time.

Summary: Reminder Service Cancel

Programmable by	System Manager
Mode	All
Idle Condition	Not required
Planning Form	Form 8a, System Features
Factory Setting	Not applicable
Valid Entries	0000 to 2359
Inspect	No
Copy Option	No
Console Procedure	To deactivate Reminder Service Cancel: Options→Reminder Srv→**Drop**→Enter→Exit To set Reminder Service Cancel time: Options→Reminder Srv→**Drop**→Dial time→Enter→Exit
PC Procedure	To deactivate Reminder Service Cancel: F7→F10→Alt + P→F10→F5 To set Reminder Service Cancel time: F7→F10→Alt + P→Type time→F10→F5

Procedure: Reminder Service Cancel

Console Display/Instructions	Additional Information	PC
1 Select the Options menu.		
System Programming: > Make a selection System Extensions SysRenumber Options Operator Tables LinesTrunks AuxEquip Exit NightSrvce		F7
2 Select Reminder Service Cancel.		
Options: > Make a selection Transfer Callback CampOn Ext Status CallParkRtn SMDR Delay Ring InsideDial Exit ReminderSrv		F10

	Console Display/Instructions	Additional Information	PC
3	**Erase the current reminder service time (*xxxx*) if assigned.**		
	Reminder Service Cancel: Enter hour (00-23) and minute (00-59) *xxxx* Backspace Exit Enter	Press **Drop**.	Alt + P
4	**Enter the time of day when all reminders are to be canceled (*hh* = 00 to 23 and *mm* = 00 to 59).**		
		To deactivate Reminder Service Cancel, do not enter a time. Go to Step 5.	
		Dial or type [*hhmm*].	↵
5	**Save your entry.**		
	Select **Enter**.		F10
6	**Return to the System Programming menu.**		
	Select **Exit**.		F5

Redirect Outside Calls to Unassigned Extension Numbers

Use this procedure to specify the extension number to receive redirected calls. Redirected calls include calls made to unassigned numbers by remote access users, by users on DID trunks (Hybrid/PBX only), or by users on dial-in tie trunks. Calls can be redirected to the following locations:

- The QCC queue (Hybrid/PBX only)
- Another extension number
- A calling group

Hybrid/PBX Mode Only
This setting does not affect calls received on DID trunks if you have specified that calls to unassigned DID extensions are to receive a fast busy signal. See “Invalid Destination.”

Summary: Redirect Outside Calls to Unassigned Extension Numbers

Programmable by	System Manager
Mode	All
Idle Condition	Not required
Planning Form	Form 8a, System Features
Factory Setting	Extension number of primary operator
Valid Entries	QCC queue extension number, other extension number
Inspect	No
Copy Option	No

Console Procedure	To select QCC queue:
	`Options`→**More**→`Unassigned`→`QCC Queue`→`Enter`→`Exit`
	To select extension or calling group:
	`Options`→**More**→`Unassigned`→`Extension` or `Grp Calling`→`Enter`→Dial ext. no.→`Enter`→Dial group no.→`Enter`→`Exit`

PC Procedure	To select QCC queue: F7 → PgUp → F1 → F1 → F1 → F10 → F5 To select extension or calling group: F7 → PgUp → F1 → F2 or F3 → F10 → F5

Procedure: Redirect Outside Calls to Unassigned Extension Numbers

	Console Display/Instructions	Additional Information	PC
1	**Select the Options menu.**		

	`System Programming: >`
	`Make a selection`
	`System  Extensions`
	`SysRenumber  Options`
	`Operator  Tables`
	`LinesTrunks  AuxEquip`
	`Exit  NightSrvce`
			F7

2	**Go to the second screen of the Options menu.**		

	`Options: >`
	`Make a selection`
	`Transfer  Callback`
	`CampOn  Ext Status`
	`CallParkRtn  SMDR`
	`Delay Ring  InsideDial`
	`Exit  ReminderSrv`
		Press **More**.	PgUp

	Console Display/Instructions	Additional Information	PC
3	**Select Redirect Unassigned Extension Numbers.**		
	Options: Make a selection Unassigned Cover Delay BehndSwitch Inter-Digit RecallTimer Ringing Freq Rotary SecNT Timer Exit		F1
4	**Specify where to redirect calls made to unassigned extension numbers.**		
	Call Unassigned Ext: Select one QCC Queue Extension Grp Calling Exit Enter	Select QCC Queue, Extension, or Grp Calling.	F1 F2 F3
5	**Save your entry.**	● ◆	
	Select Enter.		F10
		If you selected QCC Queue, you have finished this procedure. Go to Step 7. If you selected Extension, go to ● Extension Procedure. If you selected Grp Calling, go to ◆ Group Calling Procedure.	
6	**Save your entry.**		
	Select Enter.		F10
7	**Return to the System Programming menu.**		
	Select Exit.		F5

● Extension Procedure

	Console Display/Instructions	Additional Information	PC
1	**Specify the extension to which calls are to be redirected.**		

	`Unassign Calls Ext:`
	`Enter extension`
	
	`Backspace`
	`Exit  Enter`
		SP: "Entering an Extension"	

2	**Save your entry.**		
	Select **Enter**.		F10
3	**Return to the System Programming menu.**		
	Select **Exit**.		F5

◆ Group Calling Procedure

1	**Enter the extension of the calling group to which calls are to be redirected.**		

	`Unassign Calls Grp Call:`
	`Enter extension number`
	`of group`
	
	`Backspace`
	`Exit  Enter`
		Dial or type [*nnnn*].	

2	**Save your entry.**		
	Select **Enter**.		F10
3	**Return to the System Programming menu.**		
	Select **Exit**.		F5

Host System Dial Codes for Behind Switch Mode

Use this procedure to assign the host system dial codes for the Transfer, Conference, and Drop features.

When multiline telephone users press the **Transfer**, **Conference**, or **Drop** button, a signal is sent to the host service and the communications' system features are not accessed. Assigning dial codes to these features ensures that users can take advantage of them through the host system.

NOTE:
This procedure applies to Behind Switch mode only.

Summary: Host System Dial Codes for Behind Switch Mode

Programmable by	System Manager
Mode	Behind Switch
Idle Condition	Not required
Planning Form	Form 1, System Planning
Factory Setting	No host dial codes are assigned
Valid Entries	Host system dial code of up to 6 digits
Inspect	No
Copy Option	No
Console Procedure	Options→**More**→BehndSwitch→Select feature→**Drop**→Dial host system dial code→Enter→Exit→Exit
PC Procedure	F7→PgUp→F2→Select feature→Alt + P→Type host system dial code→F10→F5→F5

Procedure: Host System Dial Codes for Behind Switch Mode

	Console Display/Instructions	Additional Information	PC
1	**Select the Options menu.**		
	System Programming: > Make a selection System Extensions SysRenumber Options Operator Tables LinesTrunks AuxEquip Exit NightSrvce		F7
2	**Go to the second screen of the Options menu.**		
	Options: > Make a selection Transfer Callback CampOn Ext Status CallParkRtn SMDR Delay Ring InsideDial Exit ReminderSrv	Press **More**.	PgUp

	Console Display/Instructions	Additional Information	PC
3	**Select Behind Switch.**		
	Options: Make a selection Unassigned Cover Delay BehndSwitch Inter-Digit RecallTimer Ringing Freq Rotary SecNT Timer Exit		F2
4	**Specify the feature to which you want to assign a dial code.**		
	Behind Switch: Make a selection Transfer Conference Drop Exit	Select **Transfer**, **Conference**, or **Drop**.	F1 F2 F3
5	**Erase the current host system dial code (*xxxxxx*).**		
	Program ****: Enter host system dial code *xxxxxx* Backspace Exit Enter	**** = option name selected in Step 4 Press **Drop**.	Alt + P
6	**Enter the host system dial code (up to 6 digits).**		
		Dial or type [*n*].	
7	**Save your entry.**		
	Select **Enter**.		F10
8	**Return to the System Programming menu.**		
	Select **Exit** two times.		F5 F5

Recall Timer

Use this procedure to designate the length of the timed flash that is sent when Recall is used to disconnect a call and get a new dial tone without hanging up. Both the interval of the timed flash and how Recall works depend on the type of telephone and system operating mode.

The recall timer should be reset if multiline telephone users experience either of the following problems:

- Nothing happens when the user presses the Recall button on an outside call. This indicates that the interval is too short and should be increased to 650 milliseconds or 1 second.
- In a system operating in Behind Switch mode, the call is disconnected when the user presses the Recall button on an outside call. This indicates that the interval is too long and should be decreased to 350 milliseconds.

Summary: Recall Timer

Programmable by	System Manager
Mode	All
Idle Condition	Not required
Planning Form	Form 8a, System Features
Factory Setting	450 ms
Valid Entries	350 ms, 450 ms, 650 ms, 1 second
Inspect	No
Copy Option	No
Console Procedure	Options→**More**→RecallTimer→Select time→Enter→Exit
PC Procedure	F7→PgUp→F3→Select time→F10→F5

Procedure: Recall Timer

Console Display/Instructions	Additional Information	PC
1 Select the Options menu.		
System Programming: > Make a selection System Extensions SysRenumber Options Operator Tables LinesTrunks AuxEquip Exit NightSrvce		F7
2 Go to the second screen of the Options menu.		
Options: > Make a selection Transfer Callback CampOn Ext Status CallParkRtn SMDR Delay Ring InsideDial Exit ReminderSrv	Press **More**.	PgUp

	Console Display/Instructions	Additional Information	PC
3	**Select Recall Timer.**		
	Options: Make a selection Unassigned Cover Delay BehndSwitch Inter-Digit RecallTimer Ringing Freq Rotary SecNT Timer Exit		F3
4	**Specify a timer setting.**		
	Recall Timer: Select one 350 ms 450 ms 650 ms 1 sec Exit Enter	Press the button or function key next to your selection.	
5	**Save your entry.**		
	Select **Enter**.		F10
6	**Return to the System Programming menu.**		
	Select **Exit**.		F5

Inter-digit Timers

This procedure to program inter-digit timers has not yet been implemented. If situations occur where a caller is attempting to make an outside call and becomes connected to an incoming call, the caller may not be able to put the incoming call on hold or transfer the call. Setting inter-digit timers to shorter times will permit the call to be put on hold or transfered. If you are experiencing these types of problems, call the AT&T Helpline at 1 800 628-2888.

Allowed Lists

Use this procedure to establish Allowed Lists. These lists are telephone numbers that can be dialed from specified telephones, regardless of any calling restrictions that are assigned to the telephones.

A maximum of eight lists (numbered 0 through 7) with a maximum of 10 numbers each (numbered 0 through 9) are allowed. Each allowed number can be no more than six digits (an area code plus an exchange) or six digits with a leading 1, where required.

If you program 0 as the first digit of a list entry, any toll restriction assigned to the extension is removed for calls that can be placed by a toll operator.

Special characters (such as Pause) are not permitted in Allowed List entries.

Summary: Allowed Lists

Programmable by	System Manager
Mode	All
Idle Condition	Not required
Planning Form	Form 6g, Call Restriction Assignments and Lists
Factory Setting	Not applicable
Valid Entries	Area code/exchange (1- to 6-digits with leading 1, if necessary)
Inspect	No
Copy Option	No
Console Procedure	`Tables`→`AllowList`→Dial list no. and entry no.→`Enter`→**Drop**→Dial no.→`Enter`→`Exit`
PC Procedure	F8→F1→Type list no. and entry no.→F10→Alt + P→Type no.→F10→F5

Procedure: Allowed Lists

	Console Display/Instructions	Additional Information	PC
1	**Select the Tables menu.**		

	`System Programming: >`
	`Make a selection`
	`System  Extensions`
	`SysRenumber  Options`
	`Operator  Tables`
	`LinesTrunks  AuxEquip`
	`Exit  NightSrvce`
			F8

2	**Select Allowed List.**		

	`Tables: >`
	`Make a selection`
	`AllowList  ARS`
	`AllowTo`
	`Disallow`
	`DisallowTo`
	`Exit`
			F1

	Console Display/Instructions	Additional Information	PC
3	**Enter the list (*l* = 0 to 7) and entry (*e* = 0 to 9) numbers.**		

	`Allowed List:`
	`Enter list (0-7) and`
	`entry (0-9)`
	
	`Backspace`
	`Exit  Enter`
		If you do not enter a list number, List 0 is assigned.
		
		Dial or type [*le*].	

4	**Save your entry.**		
	Select **Enter**.		F10
5	**Erase the current area code/exchange (*nnnnnn*).**		

	`Allowed List l Entry e :`
	`Enter list item`
	
	`nnnnnn`
	
	`Backspace  Next`
	`Exit  Enter`
		l = list number entered in Step 3
		e = entry number entered in Step 3
		
		Press **Drop**.
			Alt + P

6	**Enter the allowed area code/exchange (up to 6 digits).**		
		Dial or type [*n*].	
7	**Save your entry.**		
	Select **Enter** or **Next**	Use **Next** to enter the next number on the list displayed on Line 1. Return to Step 7.	F10 F9
8	**Return to the System Programming menu.**		
	Select **Exit**.		F5

Assign Allowed Lists to Telephones

Use this procedure to assign individual telephones access to established Allowed Lists. More than one Allowed List can be assigned to a telephone.

Summary: Assign Allowed Lists to Telephones

Programmable by	System Manager
Mode	All
Idle Condition	Not required
Planning Form	Form 6g, Call Restriction Assignments and Lists
Factory Setting	Not applicable
Valid Entries	0 to 7

Inspect	Yes
Copy Option	Yes
Console Procedure	Tables→AllowTo→Dial list no.→Enter→Dial ext. no.→Enter→Exit→Exit
PC Procedure	F8→F2→Type list no.→F10→Type ext. no.→F10→F5→F5

Procedure: Assign Allowed Lists to Telephones

	Console Display/Instructions	Additional Information	PC
1	**Select the Tables menu.**		
	System Programming: > Make a selection System Extensions SysRenumber Options Operator Tables LinesTrunks AuxEquip Exit NightSrvce		F8
2	**Select Allowed To List.**		
	Tables: > Make a selection AllowList ARS AllowTo Disallow DisallowTo Exit		F2
3	**Enter the number of the list (*n* = 0 to 7).**		
	Allowed To List: Enter list number (0-7) Backspace Exit Enter	If you do not enter a list number, List 0 is assigned. Dial or type [*n*].	
4	**Save your entry.**		
	Select Enter.		F10

Console Display/Instructions	Additional Information	PC
5 Specify the extension to assign to the allowed list.		

`Allow To List x:`
`Enter extensions to list`
 	
`Delete`
`Backspace Next`
`Exit Enter`
	x = list number entered in Step 3
	
	If no DSS is attached:
	SP: "Entering an Extension"
	
	If DSS is attached:
	Toggle the red LED on or off as required. Go to Step 7.
	On = allowed list is assigned.
	Off = allowed list is not assigned.	

6 Assign or remove the extension from the allowed list.		
Select **Enter** or **Delete**.	You may continue to assign or remove the allowed list from additional extensions by repeating Steps 5 and 6.	F10 F8
7 Continue to assign extensions to the next allowed list or go to Step 8.		
Select **Next**	Return to Step 5. The next allowed list will be displayed on Line 1.	F9
8 Return to the System Programming menu.		
Select **Exit** two times.		F5 F5

Disallowed Lists

Use this procedure to establish Disallowed Lists. These lists are telephone numbers that cannot be dialed from specified telephones (including unrestricted telephones).

A maximum of 8 lists (numbered 0 through 7) with 10 entries each (numbered 0 through 9) are allowed. Each number can have a maximum of 11 digits, including wildcards. The Pause character (entered by pressing the **Hold** button) is used to designate a wildcard character, for example, to indicate that calls to a given exchange are restricted in every area code.

Security Alert:

Create a Disallowed List or use the pre-prepared Disallowed List number 7 (Release 3.1 and later systems only) to disallow dialing 0, 11, 10, 1700, 1809, 1900, and 976 or 1(wildcard)976. In Release 3.1 and later systems, Disallowed List number 7 does not include 800 and 1800 and 411 and 1411, but AT&T recommends that you add them. ***Assign all voice mail port extensions to this Disallowed List. AT&T recommends assigning Disallowed List number 7. This is an added layer of security, in case outward restriction is inadvertently removed.*** *(In Release 3.1 and later systems, voice messaging ports are assigned by default to Disallowed List number 7.)*

Summary: Disallowed Lists

Programmable by	System Manager
Mode	All
Idle Condition	Not required
Planning Form	Form 6g, Call Restriction Assignments and Lists
Factory Setting	List #7 containing the following: 0, 10, 11, 1809, 1700, 1900, 976, 1ppp976 (p = wildcard), *
Valid Entries	1- to 11-digits (including wildcards)
Inspect	No
Copy Option	No
Console Procedure	`Tables`→`Disallow`→Dial list no. and entry no.→`Enter`→**Drop**→Dial no.→`Enter`→`Exit`
PC Procedure	[F8]→[F3]→Type list no. and entry no.→[F10]→[Alt] + [P]→Type no.→[F10]→[F5]

Procedure: Disallowed Lists

	Console Display/Instructions	Additional Information	PC
1	**Select the Tables menu.**		
	System Programming: > Make a selection System Extensions SysRenumber Options Operator Tables LinesTrunks AuxEquip Exit NightSrvce		F8
2	**Select Disallowed List.**		
	Tables: Make a selection AllowList ARS AllowTo Disallow DisallowTo Exit		F3
3	**Specify the list (*l* = 0 to 7) and entry (*e* = 0 to 9) numbers.**		
	Disallow List: Enter list (0-7) and entry (0-9) Backspace Exit Enter	If you do not enter a list number, List 0 is assigned. Dial or type [*le*].	
4	**Save your entry.**		
	Select **Enter**.		F10
5	**Erase the current telephone (*n*).**		
	Disallow List *l* Entry *e* Enter list item (12 digits maximum) *nnnnn* Backspace Next Exit Enter	*l* = list number entered in Step 3 *e* = entry number entered in Step 3 Press **Drop**.	Alt + P
6	**Enter the disallowed telephone number (n = up to 12 digits).**		
		Dial or type [*n*].	
7	**Continue to assign the next telephone number to the disallowed list or go to Step 8.**		
	Select **Next**.	Use **Next** to assign the next entry to the disallowed list displayed on Line 1. Return to Step 5.	F9

	Console Display/Instructions	Additional Information	PC
8	**Return to the System Programming menu.**		
	Select `Exit`.		F5

Assign Disallowed Lists to Telephones

Use this procedure to assign established Disallowed Lists to individual telephones. Each restricted telephone can be assigned to more than one list.

Summary: Assign Disallowed Lists to Telephones

Programmable by	System Manager
Mode	All
Idle Condition	Not required
Planning Form	Form 6g, Call Restriction Assignments and Lists
Factory Setting	Not applicable
Valid Entries	0 to 7
Inspect	Yes
Copy Option	Yes
Console Procedure	`Tables`→`DisallowTo`→Dial list no.→`Enter`→Dial ext. no. →`Enter`→`Exit`→`Exit`
PC Procedure	F8 → F4 → Type list no. → F10 → Type ext. no. → F10 → F5 → F5

Procedure: Assign Disallowed Lists to Telephones

	Console Display/Instructions	Additional Information	PC
1	**Select the Tables menu.**		

	`System Programming: >`
	`Make a selection`
	`System Extensions`
	`SysRenumber Options`
	`Operator Tables`
	`LinesTrunks AuxEquip`
	`Exit NightSrvce`
			F8

Console Display/Instructions	Additional Information	PC
2 Select Disallow To Lists.		

`Tables:`
`Make a selection`
`AllowList  ARS`
`AllowTo`
`Disallow`
`DisallowTo`
`Exit`
		F4

3 Enter the list number (*n* = 0 to 7).		

`Disallow To List:`
`Enter list number (0-7)`
 	
`Backspace`
`Exit  Enter`
	Dial or type [*n*].	

4 Save your entry.		
Select **Enter**.		F10
5 Specify the extension to which you want to assign the disallowed list.		

`Disallow To List x:`
`Enter extensions to list`
 	
`Delete`
`Backspace  Next`
`Exit  Enter`
	x = list number entered in Step 3
	
	If no DSS is attached:
	SP: "Entering an Extension"
	
	If DSS is attached:
	Toggle the red LED on or off as required. Go to Step 7.
	On = disallowed list is assigned.
	Off = disallowed list is not assigned.	

6 Assign or remove the disallowed list from the extension.		
Select **Enter** or **Delete**.	You may continue to assign or remove the disallowed list from additional extensions by repeating Steps 5 and 6.	F10 F8
7 Continue to assign extensions to the next disallowed list or go to Step 8.		
Select **Next**	Return to Step 5. The next disallowed list will be displayed on Line 1.	F9
8 Return to the System Programming menu.		
Select **Exit** two times.		F5 F5

Night Service

The procedures in this section cover how to program the following optional Night Service features:

- Night Service Group Assignment
- Night Service with Outward Restriction
- Night Service with Time Set

Night Service Group Assignment

Use this procedure to assign extensions and calling groups to a Night Service group for coverage after hours.

A maximum of eight Night Service groups can be assigned (no more than one for each operator position assigned). Any number of extensions can be assigned to a Night Service group, and an extension can belong to more than one group.

A calling group can also be assigned to a Night Service group. This applies only to Release 2.0 or later.

Summary: Night Service Group Assignment

Programmable by	System manager
Mode	All
Idle Condition	Not required
Planning Form	Form 9a, Night Service: Group Assignment
Factory Setting	Not applicable
Valid Entries	Not applicable
Inspect	Yes (extensions only)
Copy Option	No
Console Procedure	To assign a calling group to a Night Service group: `NightSrvce`→`GroupAssign`→`Calling Group`→Dial ext. no. of Night Service attendant→`Enter`→Dial calling group no. →`Enter`→`Exit`→`Exit` To assign an extension to a Night Service group: `NightSrvce`→`GroupAssign`→`Extensions`→Dial ext. no. of Night Service attendant→`Enter`→Dial ext. no. of telephone→`Enter`→`Exit`→`Exit`

PC Procedure

To assign a calling group to a Night Service group:
F10 → F1 → F2 → Type ext. no. of Night Service attendant → F10 → Type calling group no. → F10 → F5 → F5

To assign an extension to a Night Service group:
F10 → F1 → F1 → Type ext. no. of Night Service attendant → F10 → Type ext. no. of telephone → F10 → F5 → F5

Procedure: Night Service Group Assignment

	Console Display/Instructions	Additional Information	PC
1	**Select the Night Service menu.**		
	System Programming: > Make a selection System Extensions SysRenumber Options Operator Tables LinesTrunks AuxEquip Exit NightSrvce		F10
2	**Select Group Assignment.**		
	Night Service: Make a selection GroupAssign Start OutRestrict Stop Emergency Time Control ExcludeList Exit		F1
3	**Select an option.**		
	Night Serv Group Assign: Make a selection Extensions Calling Grp Exit	Select **Extensions** to add an extension to a Night Service group. Select **Calling Grp** to add a calling group to a Night Service group.	F1 F2
4	**Enter the operator number.**		
	Night Serv Group Assign: Enter NS Attendnt number Backspace Exit Enter	Dial or type [*nnnn*].	↵

	Console Display/Instructions	Additional Information	PC
5	**Save your entry.**	● ◆	
	Select **Enter**.		F10
		If you selected **Extensions** in Step 3, go to ● Extensions Procedure.	
		If you selected **Calling Grp** in Step 3, go to ◆ Calling Group Procedure.	

● Extensions Procedure

1 Specify the extension you want to assign to the Night Service group.

```
Night Serv Group xxxx:
Enter extension


              Delete
Backspace     Next
Exit          Enter
```

xxxx = number entered in Step 4

If no DSS is attached:
SP: "Entering an Extension"

If DSS is attached:
Toggle the red LED on or off as required. Then, go to Step 3.
On = extension assigned to group.
Off = extension not assigned to group.

2 Assign or remove the extension(s) from the Night Service group.

```
Night Serv Group xxxx:
Enter extension
xxx

              Delete
Backspace     Next
Exit          Enter
```

xxxx = number entered in Step 4

Select **Enter** to assign or F10
Delete to remove your entry and F8
continue adding or removing extensions from the Night Service group by repeating Steps 1 and 2.

Select **Next** to save your entry and F9
begin assigning extensions to the *next* Night Service group (operator position).

3 Return to the System Programming menu.

Select **Exit** two times. F5 F5

◆ **Calling Group Procedure.**

	Console Display/Instructions	Additional Information	PC
1	**Enter the extension of the calling group to be added.**		
	Night Serv Group *xxxx*: Enter group call ext Delete Backspace Next Exit Enter	*xxxx* = number entered in Step 4 Dial or type [*nnnn*].	↵
2	**Assign or remove the calling group(s) from the Night Service group.**		
	Night Serv Group *xxxx*: Enter group call ext *xxx* Delete Backspace Next Exit Enter	*xxxx* = number entered in Step 4 Select **Enter** to assign or **Delete** to remove your entry and continue adding or removing calling groups from the Night Service group by repeating Steps 1 and 2. Select **Next** to save your entry and begin assigning calling groups to the *next* Night Service group (operator position).	F10 F8
3	**Return to the System Programming menu.**		
	Select **Exit** two times.		F5 F5

Night Service with Outward Restriction

Use this procedure to prevent unauthorized use of telephones after hours. This feature requires the user to enter a password to make a call when Night Service is activated, unless one of the lists below applies. It also requires an operator to enter a password in order to manually activate Night Service.

To remove the password requirement follow the procedure below and delete the current password (press the **Drop** button).

This procedure is also used to establish the following lists:

- **Emergency Allowed List.** A list of telephone numbers that can be dialed without a password.
- **Exclusion List.** A list of extensions that are exempt from password requirements.

NOTES:

1. A maximum of 10 telephone numbers can be included on the Emergency Allowed List, each number with a maximum of 12 digits.
2. Extensions included in the Exclusion List keep normal call restrictions (if any are assigned); however, they are not protected in any other way from unauthorized use after hours.
3. AUDIX Voice Power jacks are automatically included on the Exclusion List.

Summary: Night Service with Outward Restriction

Programmable by	System manager
Mode	All
Idle Condition	Not required
Planning Form	Form 9b, Night Service: Outward Restrictions
Factory Setting	No password
Valid Entries	4 digits (any combination of 0 to 9)
Inspect	Yes (Exclusion List)
Copy Option	No
Console Procedure	NightSrvce→OutRestrict→**Drop**→Dial password→Enter→Emergency→Dial item no.→Enter→**Drop**→Dial telephone no.→Enter→ExcludeList→Dial ext. no. →Enter→Exit→Exit
PC Procedure	[F10]→[F2]→[Alt] + [P]→Type password→[F10]→[F3]→Type item no.→[F10]→[Alt] + [P]→Type telephone no.→[F10]→[F4]→Type ext. no.→[F10]→[F5]→[F5]

Procedure: Night Service with Outward Restriction

	Console Display/Instructions	Additional Information	PC
1	**Select the Night Service menu.**		
	System Programming: > Make a selection System Extensions SysRenumber Options Operator Tables LinesTrunks AuxEquip Exit NightSrvce		F10
2	**Select Outward Restriction.**		
	Night Service: Make a selection GroupAssign Start OutRestrict Stop Emergency Time Control ExcludeList Exit		F2
3	**Erase the current password (*xxxx*) if assigned.**		
	Night Serv OutRestrict: Enter 4-digit password *xxxx* Backspace Exit Enter	Press **Drop**.	Alt + P
4	**Enter a four-digit password (*n* = any combination of 0 to 9).**		
	Night Serv OutRestrict: Enter 4-digit password Backspace Exit Enter	To remove the password requirement, leave the screen blank and go to Step 5. Dial or type [*nnnn*].	
5	**Save your entry.**		
	Select **Enter**.	If you removed the password requirement, you have completed this procedure.	F10

	Console Display/Instructions	Additional Information	PC
6	**Select Emergency Allowed List.**		
	Night Service: Make a selection GroupAssign Start OutRestrict Stop Emergency Time Control Exclude List Exit	If you do not wish to enter an Emergency Allowed List, skip this step and go to Step 13	F3
7	**Enter the item number you want to add or change (*n* = 0 to 9).**		
	Night Serv Emergency: Enter item number (0-9) Backspace Exit Enter	Dial or type [*n*].	
8	**Save your entry.**		
	Select **Enter**.		F10
9	**Erase the current telephone number (*n*) if assigned.**		
	Night Serv Emergency *x*: Enter telephone number *n* Backspace Next Exit Enter	*x* = list item number entered in Step 7 Press **Drop**.	Alt + P
10	**Enter the telephone number (up to 12 digits).**		
		Dial or type [*n*].	
11	**Continue to assign a telephone number to the next emergency list item or go to Step 12.**		
	Select **Next**.	Return to Step 9. The next emergency list item number will display on Line 1.	F9
12	**Save your entry.**		
	Select **Enter**.		F10

	Console Display/Instructions	Additional Information	PC
13	**Select Exclusion List.**		
	Night Service: Make a selection GroupAssign Start OutRestrict Stop Emergency Time Control ExcludeList Exit		F4
14	**Specify the extension.**		
	Night Serv Exclusion: Enter extensions excluded Delete Backspace Exit Enter	**If no DSS is attached**: **SP:** "Entering an Extension" **If DSS is attached**: Toggle the red LED on or off as required. Then, go to Step 16. On = extension is excluded from list. Off = extension is not excluded from list.	
15	**Assign or remove the extension(s) from the exclusion list.**		
	Select **Enter** or **Delete**.	Continue to add or delete extensions by repeating Steps 14 and 15.	F10 F8
16	**Return to the System Programming menu.**		
	Select **Exit** two times.		F5 F5

Night Service with Time Set

Use this procedure to specify the time of day and the days of the week when Night Service is to be activated and deactivated.

Enter the time of day as 4 digits, using 24-hour notation. Enter the day of the week as a single digit (0 to 6), with 0 being Sunday. If you enter an invalid number, the system truncates the number.

If you change the system time while Night Service is active, Night Service is deactivated automatically and you must manually reactivate it.

Operators can override the timer and turn Night Service on and off manually. This feature can be deactivated when out-of-the-ordinary situations occur (for example, a midweek holiday).

NOTE:
For Release 2.1 and earlier, after setting Start and Stop time for Night Service the current day of the week for Night Service must be set using the following procedure.

NightSrvce→Day of Week→Dial the current day of the week→Enter→Exit

If system programming information is being loaded into memory from a backup diskette, the current day of the week must be reset.

Night Service can be turned off by using the following procedure:

NightSrvce→Day of Week→Dial 7→Enter→Exit

Summary: Night Service with Time Set

Programmable by	System manager
Mode	All
Idle Condition	Not required
Planning Form	Form 9c, Night Service: Time Set
Factory Setting	Not applicable
Valid Entries	Day: 0 to 6; Time: 0000 to 2359
Inspect	No
Copy Option	No
Console Procedure	To add or change start/stop time: NightSrvce→Start→**Drop**→Dial start day and time→Enter→Stop→**Drop**→Dial stop day and time→Enter→Exit To activate/deactivate: NightSrvce→Time Control→Off or On→Enter→Exit
PC Procedure	To add or change start/stop time: F10→F6→Alt + P→Type start day and time→F10→F7→Alt + P→Type stop day and time→F10→F5 To activate/deactivate: F10→F8→F1 or F2→F10→F5

Procedure: Night Service with Time Set

	Console Display/Instructions	Additional Information	PC
1	**Select the Night Service menu.**		
	System Programming: > Make a selection System Extensions SysRenumber Options Operator Tables LinesTrunks AuxEquip Exit NightSrvce		F10
2	**Select Night Service option.**	● ◆ ■	
	Night Service: Make a selection GroupAssign Start OutRestrict Stop Emergency Time Control ExcludeList Exit	To add or change start time, select **Start** and go to Time ● Add or Change Start Procedure. To add or change stop time, select **Stop** and go to ◆ Add or Change Stop Time Procedure. To Activate/deactivate Night Service with Time Control, select **Time Control** and go to ■ Activate/Deactivate Night Service Procedure.	F6 F7 F8

● Add or Change Start Time Procedure

1	**Erase the current start day and time (*xxxxx*) if assigned.**		
	Night Serv Start: Enter day(0-6), hr(00-23) and min(00-59) *xxxxx* Backspace Exit Enter	Press **Drop**.	Alt + P
2	**Enter a one-digit day of the week (Sunday = *0*, Monday = *1*, and so on), followed by a four-digit time of day (*hh* = 00 to 23, *mm* = 00 to 59).**		
		Dial or type [*dhhmm*].	
3	**Save your entry.**		
	Select **Enter.**		F10
4	**Return to the System Programming menu.**		
	Select **Exit**.		F5

◆ Add or Change Stop Time Procedure

	Console Display/Instructions	Additional Information	PC
1	**Erase the current stop day and time (*xxxxx*) if assigned.**		

	`Night Serv Stop:`
	`Enter day(0-6),hr(00-23)`
	`and min(00-59)`
	xxxxx
	
	`Backspace`
	`Exit  Enter`
		Press **Drop**.	Alt + P

2	**Enter a one-digit day of the week (Sunday = *0*, Monday = *1*, and so on), followed by a four-digit time of day (*hh* = 00 to 23, *mm* = 00 to 59).**		
		Dial or type [*dhhmm*].	
3	**Save your entry.**		
	Select **Enter.**		F10
4	**Return to the System Programming menu.**		
	Select **Exit**.		F5

■ Activate/Deactivate Night Service Procedure

1	**Turn Night Service On or Off**		

	`Night Serv Time Control:`
	`Select one`
	`On`
	`Off`
	
	`Exit  Enter`
		Select **On** to turn Night Service on.
		
		Select **Off** to turn Night Service off.
			F1
			
			F2

2	**Save your entry.**		
	Select **Enter.**		F10
3	**Return to the System Programming menu.**		
	Select **Exit**.		F5

Labeling

The procedures in this section cover how to add or change labels for the following:

- Extension Directory
- Lines or Trunks
- Posted Message
- Group Calling
- System Speed Dial Directory

These procedures can be done using Integrated Administration.

Programming on the system programming console:
Use the buttons next to the display to specify the letters A through I and punctuation. Use the line/feature buttons to specify additional alphanumeric characters for labels. Use the template provided with the MLX-20L telephone to see which line buttons correspond to which alphanumeric characters.

Programming with SPM:
Use the PC keyboard for labels. All letters appear on the screen in uppercase.

NOTE:
See the MLX-20L User's Guide for instructions on creating or editing a personal directory.

Extension Directory

Use this procedure to establish alphanumeric system labels for display set telephone users to identify the person calling or leaving a message. This procedure is also used to program the Extension Directory feature for MLX telephones.

A label can have a maximum of seven characters.

Summary: Extension Directory

Programmable by	System manager
Mode	All
Idle Condition	Not required
Planning Form	Form 2a, System Numbering: Extension Jacks
Factory Setting	Not applicable
Valid Entries	Not applicable
Inspect	No
Copy Option	No
Console Procedure	**More**→Labeling→Directory→Extension→Dial ext. no. →Enter→**Drop**→Enter label→Enter→Exit→Exit→ Exit
PC Procedure	PgUp→F1→F1→F2→Type ext. no.→F10→Alt + P→ Type label→F6→F5→F5→F5

Procedure: Extension Directory

	Console Display/Instructions	Additional Information	PC
1	**Go to the second screen of the System Programming menu.**		
	System Programming: > Make a selection System Extensions SysRenumber Options Operator Tables LinesTrunks AuxEquip Exit NightSrvce	Press **More**.	PgUp
2	**Select the Labeling menu.**		
	System Programming: Make a selection Labeling Language Data Print Cntr-Prg Exit		F1
3	**Select Directory.**		
	Labeling Make a selection Directory LinesTrunks PostMessage Grp Calling Exit		F1

	Console Display/Instructions	Additional Information	PC
4	**Select Extension.**		

	`Directory:`
	`Make a selection`
	`System`
	`Extension`
	`Personal`
	
	`Exit`
			F2

5	**Specify the extension you want to label.**		

	`Extension Directory`
	`Enter extension`
	
	`Backspace`
	`Exit  Enter`		

6	**Save your entry.**		
	Select **Enter**.		F10
7	**Erase the current label (*AAAAAAA*) if assigned.**		

	`Ext xxxx:Enter new name`
	`AAAAAAA`
	`Punctuation  Enter`
	`Backspace  Exit`
	`A  '  ,  B`
	`C  -  &  D`
	`E  .  Space  F`
		xxxx = number entered in Step 5
		
		Press **Drop**.
			Alt + P

8	**Enter a label for the extension.**		
		Use **Punctuation** to toggle between letters and punctuation. Dial or type the label.	
9	**Save your entry.**		
	Select **Enter**.	**Note**: F6, not F10. Continue to label additional extensions by repeating Steps 5 through 9.	F6
10	**Return to the System Programming menu.**		
	Select **Exit** three times.		F5 F5 F5

Lines or Trunks

Use this procedure to establish alphanumeric system labels for display set telephone users to identify the line or trunk being used.

Summary: Lines or Trunks

Programmable by	System manager
Mode	All
Idle Condition	Not required
Planning Form	Form 2c, System Numbering: Line/Trunk Jacks
Factory Setting	Not applicable
Valid Entries	Not applicable
Inspect	No
Copy Option	No
Console Procedure	**More**→Labeling→LinesTrunks→Dial line/trunk no.→Enter→**Drop**→Dial label→Enter→Exit→Exit
PC Procedure	PgUp→F1→F2→Type line/trunk no.→F10→Alt + P→Type label→F6→F5→F5

Procedure: Lines or Trunks

	Console Display/Instructions	Additional Information	PC
1	**Go to the second screen of the System Programming menu.**		
	System Programming: > Make a selection System Extensions SysRenumber Options Operator Tables LinesTrunks AuxEquip Exit NightSrvce	Press **More**.	PgUp
2	**Select the Labeling menu.**		
	System Programming: Make a selection Labeling Language Data Print Cntr-Prg Exit		F1

	Console Display/Instructions	Additional Information	PC
3	**Select Lines/Trunks.**		

	`Labeling`
	`Make a selection`
	`Directory`
	`LinesTrunks`
	`PostMessage`
	`Grp Calling`
	`Exit`
			F2

4	**Enter the line or trunk number.**		

	`Label Lines/Trunks:`
	`Enter the line/trunk`
	`number`
	
	`Backspace`
	`Exit  Enter`
		Dial or type:
		Trunk number [*nnn*]
		Slot and port number *[*sspp*]
		Logical ID number #[*nnn*].	

5	**Save your entry.**		
	Select **Enter**.		F10
6	**Erase the current label (*AAAAAAA*) if assigned.**		

	`L xxx Enter new label`
	`AAAAAAA`
	`Punctuation  Enter`
	`Backspace  Exit`
	`A  '  ,  B`
	`C  -  &  D`
	`E  .  Space  F`
		xxx = number entered in Step 4
		
		Press **Drop**.
			Alt + P

7	**Enter a label for the line or trunk.**		
		Use **Punctuation** to toggle between letters and punctuation. Dial or type the label.	
8	**Save your entry.**		
	Select **Enter**.	**Note**: F6, not F10. Continue to label additional lines/trunks by repeating Steps 4 through 8.	F6
9	**Return to the System Programming menu.**		
	Select **Exit** two times.		F5 F5

Posted Message

Use this procedure to add or change existing posted messages. The posted messages allow callers with display telephones to know why the called extension does not answer.

Each posted message can have a maximum of 16 characters. Messages 2 through 20 can be changed through programming. Message 1, Do Not Disturb, cannot be changed.

Summary: Posted Message

Programmable by	System manager, Integrated Administration
Mode	All
Idle Condition	Not required
Planning Form	Form 8a, Label Form: Posted Message
Factory Setting	First 10 messages
Valid Entries	1 to 20
Inspect	No
Copy Option	No
Console Procedure	**More**→Labeling→PostMessage→Dial message no.→Enter→**Drop**→Enter message→Enter→Exit→Exit
PC Procedure	PgUp→F1→F3→Type message no.→F10→Alt + P→Type message→F6→F5→F5

Procedure: Posted Message

	Console Display/Instructions	Additional Information	PC
1	**Go to the second screen of the System Programming menu.**		
	System Programming: > Make a selection System Extensions SysRenumber Options Operator Tables LinesTrunks AuxEquip Exit NightSrvce	Press **More**.	PgUp
2	**Select the Labeling menu.**		
	System Programming: Make a selection Labeling Language Data Print Cntr-Prg Exit		F1

	Console Display/Instructions	Additional Information	PC
3	**Select Posted Message.**		

	`Labeling`
	`Make a selection`
	`Directory`
	`LinesTrunks`
	`PostMessage`
	`Grp Calling`
	`Exit`
			F3

4	**Enter the posted message number (*nn* = 1 to 20).**		

	`Posted Message:`
	`Enter the message number`
	`(01-20)`
	
	`Backspace`
	`Exit  Enter`
		Dial or type [*nn*].	

5	**Save your entry.**		
	Select **Enter**.		F10
6	**Erase the current message (*AAAAAAA*) if assigned.**		

	`Msg xx:Enter new message`
	`AAAAAAA`
	`Punctuation  Enter`
	`Backspace  Exit`
	`A  '  ¬  B`
	`C  -  &  D`
	`E  .  Space  F`
		xx = number entered in Step 4
		
		Press **Drop**.
			Alt + P

7	**Enter the new message.**		
		Use **Punctuation** to toggle between letters and punctuation. Dial or type the message.	
8	**Save your entry.**		
	Select **Enter**.	**Note**: F6, not F10. Change additional messages by repeating Steps 4 through 8.	F6
9	**Return to the System Programming menu.**		
	Select **Exit** two times.		F5 F5

Group Calling

Use this procedure to establish alphanumeric system labels for display telephone users to identify calling groups.

A label can have a maximum of seven characters.

Summary: Group Calling

Programmable by	System manager, Integrated Administration
Mode	All
Idle Condition	Not required
Planning Form	Form 6e, Group Calling
Factory Setting	Not applicable
Valid Entries	Not applicable
Inspect	No
Copy Option	No
Console Procedure	**More**→Labeling→Grp Calling→Dial calling group ext. no.→Enter→**Drop**→Enter label→Enter→Exit→Exit
PC Procedure	PgUp→F1→F4→Type calling group ext. no.→F10→Alt + P→Type label→F6→F5→F5

Procedure: Group Calling

	Console Display/Instructions	Additional Information	PC
1	**Go to the second screen of the System Programming menu.**		
	System Programming: > Make a selection System Extensions SysRenumber Options Operator Tables LinesTrunks AuxEquip Exit NightSrvce	Press **More**.	PgUp
2	**Select the Labeling menu.**		
	System Programming: Make a selection Labeling Language Data Print Cntr-Prg Exit		F1

	Console Display/Instructions	Additional Information	PC
3	**Select Group Calling.**		

	`Labeling`
	`Make a selection`
	`Directory`
	`LinesTrunks`
	`PostMessage`
	`Grp Calling`
	`Exit`
			F4

4	**Enter the calling group extension number (*nnnn*).**		

	`Group Calling:`
	`Enter extension number`
	`of group`
	
	`Backspace`
	`Exit  Enter`
		Dial or type [*nnnn*].	

5	**Save your entry.**		
	Select **Enter**.		F10
6	**Erase the current label (*AAAAAAA*) if assigned.**		

	`GrpCl xxxx:Enter new label`
	`AAAAAAA`
	`Punctuation  Enter`
	`Backspace  Exit`
	`A  '  ,  B`
	`C  -  &  D`
	`E  .  Space  F`
		xxxx = number entered in Step 4
		
		Press **Drop**.
			Alt + P

7	**Enter a label for the calling group.**		
		Use **Punctuation** to toggle between letters and punctuation. Dial or type the label.	
8	**Save your entry.**		
	Select **Enter**.	**Note**: F6, not F10. Continue to label additional calling groups by repeating Steps 4 through 8.	F6
9	**Return to the System Programming menu.**		
	Select **Exit** two times.		F5 F5

System Speed Dial Directory

Use this procedure to establish System Speed Dial numbers for all system users. You can also use this procedure to enter the alphanumeric labels shown on display telephones (for the System Directory feature of the MLX telephone).

A total of 130 numbers (System Speed Dial plus System Directory) can be entered, with a maximum of 11 characters per label.

Speed dial code assignments are 600 through 729.

Summary: System Speed Dial Directory

Programmable by	System manager, Integrated Administration
Mode	All
Idle Condition	Not required
Planning Form	Form 8b, System Speed Dial
Factory Setting	Not applicable
Valid Entries	600 to 729
Inspect	No
Copy Option	No
Console Procedure	**More**→Labeling→Directory→System→Dial dial code no.→Enter→**Drop**→Enter label Enter→Backspace→Dial telephone no.→Enter→Yes or No→Enter→Exit→Exit →Exit
PC Procedure	PgUp→F1→F1→F1→Type dial code no.→F10→ Alt + P→Type label→F6→F2→Type telephone no. →F6→F1 or F2→F6→F5→F5→F5

Procedure: System Speed Dial Directory

	Console Display/Instructions	Additional Information	PC
1	**Go to the second screen of the System Programming menu.**		
	System Programming: > Make a selection System Extensions SysRenumber Options Operator Tables LinesTrunks AuxEquip Exit NightSrvce	Press **More**.	PgUp

	Console Display/Instructions	Additional Information	PC
2	**Select the Labeling menu.**		
	System Programming: Make a selection Labeling Language Data Print Cntr-Prg Exit		F1
3	**Select Directory.**		
	Labeling Make a selection Directory LinesTrunks PostMessage Grp Calling Exit		F1
4	**Select System.**		
	Directory: Make a selection System Extension Personal Exit		F1
5	**Enter the speed dial code number you want to add or change (*nnn* = 600 to 729).**		
	System Directory: Enter the entry number (600-729) Backspace Exit Enter	Dial or type [*nnn*].	↵
6	**Save your entry.**		
	Select **Enter**.		F10
7	**Erase the current label (*AAAAAAA*) if assigned.**		
	Entry *xxx*:Enter new name *AAAAAAA* Punctuation Enter Backspace Exit A ' , B C - & D E . Space F	*xxx* = code entered in Step 4 Press **Drop**.	Alt+P

	Console Display/Instructions	Additional Information	PC
8	**Enter a label for the speed dial code.**		
		Use **Punctuation** to toggle between letters and punctuation.	
		Dial or type the label.	
9	**Save your entry.**		
	Select **Enter**.		F6
		Note: F6, not F10.	
10	**Erase the currently assigned telephone number (*x*).**		
	Enter Tel. No.┐ and Enter *x* Punctuation Enter Backspace Exit A ' ┐ B C - & D E . Space F	**Note**: Do *not* press **Drop**.	
		Press **Backspace.**	F2
11	**Enter a telephone number for the speed dial code entered in Step 5 (*n* = up to 20 digits).**		
		Include any special characters shown on the planning form: ■ **Hold** (Alt+H) = Pause ■ **Drop** (Alt+P) = Stop ■ **Conference** (Alt+F) = switchhook flash	
		Dial or type [*n*].	
12	**Save your entry.**		
	Select **Enter**.		F6
		Note: F6, not F10.	
13	**Select a display option.**		
	Displ no. while dialing? Yes Enter No Exit	If you want the dialed telephone number to display when using the System Directory feature, select **Yes**.	F1
		If you do not want the dialed telephone number to display when using the System Directory feature, select **No**.	F2

	Console Display/Instructions	Additional Information	PC
14	**Save your entry.**		
	Select Enter.	**Note**: F6, not F10. Continue to assign additional Speed Dial numbers by repeating Steps 4 through 14.	F6
15	**Return to the System Programming menu.**		
	Select Exit three times.		F5 F5 F5

Print Reports

Use the procedures in this section to change the language for system reports and to print the system reports.

Report Language

Use this procedure to change the language of the system reports. It applies to Release 1.1 and higher. Unless you change the report language, reports are printed in the language chosen as the system language.

Summary: Report Language

Programmable by	System manager
Mode	All
Idle Condition	Not required
Planning Form	Form 1, System Planning
Factory Setting	English
Valid Entries	English, French, Spanish
Inspect	No
Copy Option	No
Console Procedure	**More**→Language→Printer→English or French or Spanish→Enter→Exit
PC Procedure	PgUp→F6→F4→F1 or F2 or F3→F10→F5

Procedure: Report Language

Console Display/Instructions	Additional Information	PC
1 Go to the second screen of the System Programming menu.		
System Programming: > Make a selection System Extensions SysRenumber Options Operator Tables LinesTrunks AuxEquip Exit NightSrvce	Press **More**.	PgUp

	Console Display/Instructions	Additional Information	PC
2	**Select Language.**		
	System Programming: Make a selection Labeling Language Data Print Cntr-Prg Exit		F6
3	**Select Printer.**		
	Language Make a selection SystemLang Extensions SMDR Printer Exit		F4
4	**Specify a language for the reports.**		
	Printer Language: Select one English French Spanish Exit Enter	Select **English**, **French**, or **Spanish**.	F1 F2 F3
5	**Save your entry.**		
	Select **Enter**.		F10
6	**Return to the System Programming menu.**		
	Select **Exit**.		F5

Printing System Reports

The communications system can be used to print a variety of reports. You can print individual reports or use the `All` option to print the entire set of available reports, including all report sections and options. See Appendix F for samples of the print reports.

Use this procedure to print the reports listed below. With the exception of Trunk Information, the dash lists under the bullets show the sections of each report that automatically print when the report option is selected.

- All
  - Each report
  - All report options
- System Set Up
- System Dial Plan
  - Pools
  - Telephone Paging Zones
  - Direct Group Calling
  - Lines/Trunks
  - Stations (Extensions)
- Label Information
  - Telephone Personal Directory
  - Message Numbers and Posted Messages
- Trunk Information[1]
  - TIE
  - DID
  - Loop/Ground
  - General
  - Switched 56 Data
- T1 Information
- PRI Information

[1] Trunk option must be specified

- Remote Access
  - General Options
  - Non-TIE Restrictions
  - TIE Restrictions
  - Barrier Code Restrictions
- Operator Information
  - Position
  - General Options
  - DSS Options
  - QCC Operators
  - Operator Information
- Allowed Lists
- Allowed Lists Assigned to Extensions
- Disallowed Lists
- Disallowed Lists Assigned to Extensions
- Automatic Route Selection
- Tables
- Extension Directory
- System Directory
- Group Page
- Extension information
- Group Coverage
- Group Calling
- Night Service
- Call Pickup Groups
- Error Logs
- Authorization Codes
- BRI Information Report

NOTES:

1. If you select the `All` option, keep in mind that the reports take several minutes to print. You may want to schedule use of the printer during off-peak hours.
2. If you select a report for which there is no information, the report header still prints.
3. Print reports if you cannot back up your system programming information.
4. Do not print reports if your system must handle more than 100 calls per hour.
5. If you are printing from the console, your printer must be connected to the SMDR port. If you are programming on a PC with SPM, you have the following choices:
   - Print reports on the SMDR printer (if available).
   - Print reports on the PC printer.
   - Save reports (on hard disk or floppy).
   - View reports (browse).

See Chapter 2, “Programming With SPM,” for details.

Summary: Printing System Reports

Programmable by	System manager
Mode	All
Idle Condition	Not required
Planning Form	Not applicable
Factory Setting	Not applicable
Valid Entries	Any saved report
Inspect	No
Copy Option	No
Console Procedure	To print trunk information: **More**→`Print`→`Trunk Info`→Select trunk type→`Exit` To print extension information: **More**→`Print`→**More**→`Ext Info`→Dial extension number →`Enter`→`Exit` To print all other reports: **More**→`Print`→Select report→`Exit`

PC Procedure

To print trunk information:
PgUp → F3 → F6 → Select trunk type → F5

To print extension information:
PgUp → F3 → PgUp → F10 → Type extension number → F10 → F5

To print all other reports:
PgUp → F3 → Select report → F5

To save report on disk:
PgUp → F3 → Select report → F10 → Select GOTO FLOPPY → F10

To view report:
Ctrl + F8

Procedure: Printing System Reports

	Console Display/Instructions	Additional Information	PC
1	**Go to the second screen of the System Programming menu.**		
	System Programming: > Make a selection System Extensions SysRenumber Options Operator Tables LinesTrunks AuxEquip Exit NightSrvce	Press **More**.	PgUp
2	**Select Print.**		
	System Programming: Make a selection Labeling Language Data Print Cntr-Prg Exit		F3

	Console Display/Instructions	Additional Information	PC
3	**Select the report you want to print.**	● ◆	

	`Print (xxxx):  >`
	`Make a selection`
	`All  Trunk Info`
	`SysSet-up  T1 Info`
	`Dial Plan  PRI Info`
	`Labels  RmoteAccess`
	`Exit  Oper Info`
		xxxx = previously selected language
		
		For additional selections press **More**.
		
		If you select **Trunk Info** go to
		● Trunk Information Procedure.
			
			PgDn

	`Print More:  >`
	`Make a selection`
	`AllowList  ARS`
	`AllowListTo  Ext Direct`
	`DisallowLst  Sys Direct`
	`DisallowTo  Group Page`
	`Exit  Ext Info`
		If you select **Ext Info** go to
		◆ Extension Information Procedure.
		
		The **All** option prints each of the available reports and takes several minutes to complete.	

	`Print More`
	`Make a selection`
	`GrpCoverage  Error Log`
	`Grp Calling  Auth Code`
	`Night Servce  BRI Info`
	`Call Pickup`
	`Exit`
		Press the button or function key next to your selection.	

4	**Observe the print progress screen.**		

	`Print in Progress . . .`
	
	`Exit`
		Press **Exit** (F5) to interrupt printing and display the print menu.	

5	**Return to the System Programming menu.**		
	Select **Exit**.		F5

● Trunk Information Procedure

	Console Display/Instructions	Additional Information	PC
1	**Specify a trunk type.**		
	Trunk Info Enter line/trunk type TIE S56 Data DID Loop/Ground General Exit	Press the button or function key next to your selection.	
2	**Return to Step 4 of the main procedure.**		

◆ Extension Information Procedure

1	**Enter the number of the extension for which you want a report (*nnnn*).**		
	Extension Info Enter extension number Backspace Exit Enter	**SP:** “Entering an Extension”	
2	**Save your entry.**		
	Select **Enter**.		F10
3	**Return to Step 4 of the main procedure.**		

Memory Card

A PCMCIA (Personal Computer Memory Card International Association) interface slot is present on the processor module. The slot is a standard interface through which information can be added to or obtained from the system using a memory card. The PCMCIA interface slot accepts one memory card at a time.

This section covers the following memory card functions:

- Backup
- Automatic Backup

For information on the Restore procedure and additional information about memory cards, see Chapter 4, “Advanced Programming Procedures.”

Card Types

There a four different types of memory cards that are identified by a preprinted, color-coded label. Backups are always performed using the **Translation Card** and the new `Backup/Restore` option on the System menu. A new automatic backup feature permits you to set the system to perform automatic backups to the memory card on a daily or weekly basis. See “Backup” for more information.

This card is identified by a white label with black lettering.

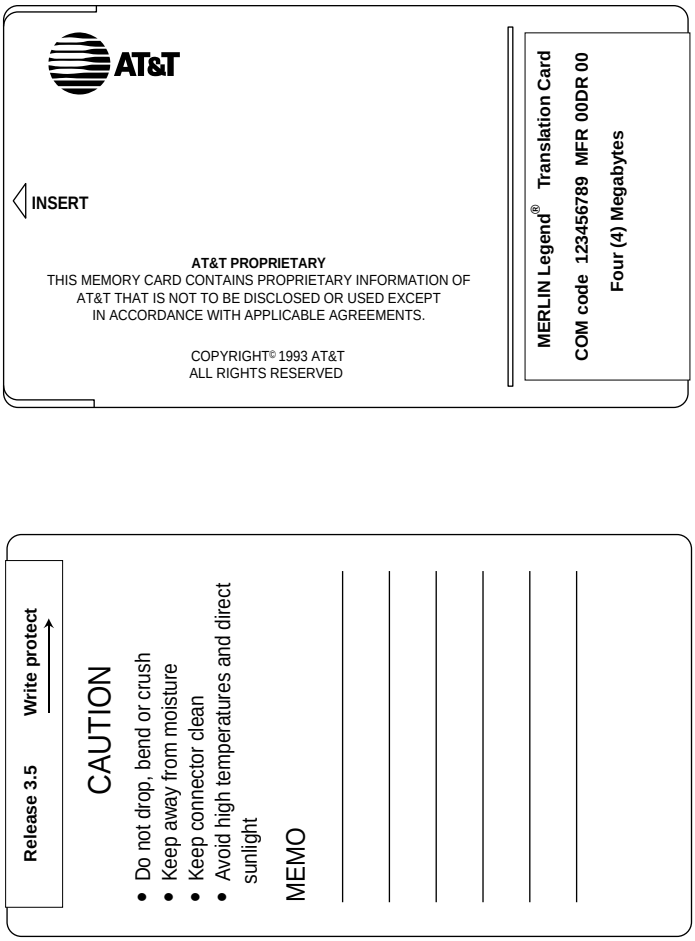

Figure 3–4. PCMCIA Memory Card

Inserting the Card

To insert the card, hold the card with the AT&T logo facing up and the arrow pointing toward the slot. See Figure 3-5 for the proper way to insert the memory card into the slot on the processor module.

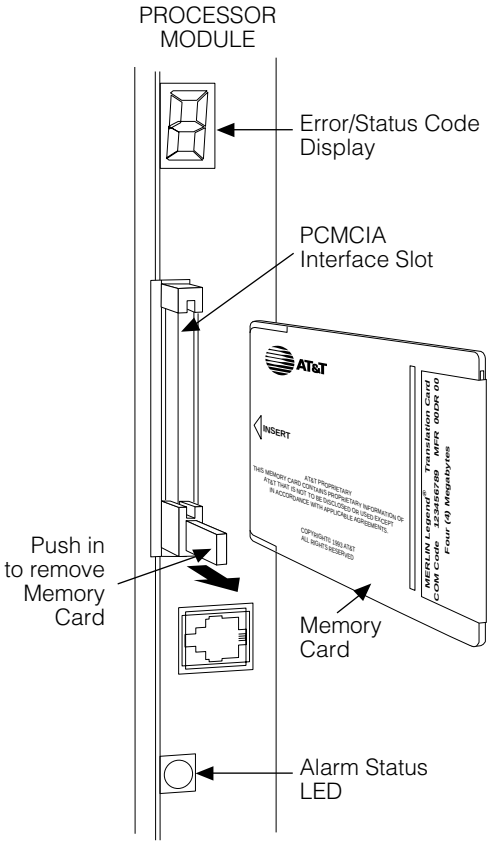

Figure 3–5. Inserting the Memory Card

Backup

Use this procedure to make a copy of your customized system data. You should create a backup at least three times during system installation (so that programmed information is not lost), and once after each system upgrade, service technician visit, or major system reconfiguration.

The Inspect feature (**Inspct** or PgDn) is available to view the attributes of the backup files on the memory card prior to initiating the backup procedure. The attributes included on the Inspect screen are the filename, the time and date of the file creation/update, the location of the system programming port, and information about the system software release from which the backup was made.

The list of backup files contains three manual backup filenames and two automatic backup filenames. The default names of the manual backup files are BACK1.*****, BACK2.*****, and BACK3.*****. When you select one of the backup filenames, the system automatically replaces the stars in the filename with the current month and day (*mmdd*). For example, BACK1.0116 would appear if you selected BACK1.****** and performed the backup procedure on January 16. You can rename any of the three default files during the backup procedure. The automatic backup filenames are AUTO.BACK1 and AUTO.BACK2. You cannot change the names of these files.

If you enter a filename that currently exists, the message File already exists appears. You must enter another filename.

While the backup is in progress, you cannot access system programming functions, your Personal Directory, or alarm clock functions (any programmed alarms are temporarily deactivated). You may terminate the backup procedure at any point prior to receiving confirmation of a successful backup.

If any type of programming is taking place at another extension when you begin the backup procedure, the backup is canceled and the number of the first busy extension appears on the screen. Attempt the backup procedure again when the busy extension becomes idle.

If the system is turned off during a backup procedure, the backup is terminated. The system performs a System Reset (cold start), after which you may repeat the backup procedure.

If **Home** or **Menu** are pressed during a backup procedure, the backup is terminated. This may result in the deletion of an old backup file. See Chapter 1, “Programming Basics,” for detail about these keys.

NOTE:
If the system performs a System Erase (frigid start), all programming is set to the default values. If a previous backup file is available, perform a restore. If not, the system must be reprogrammed. See “Restore” in Chapter 4 for information about the system restore procedure.

Also see “Backup Messages” for information about errors that may occur during the backup procedure.

Summary: Backup

Programmable by	System manager
Mode	All
Idle Condition	Not required (No extensions are allowed to be in programming mode except system programming console)
Planning Form	Form 1, System Planning
Factory Setting	Not applicable
Valid Entries	1- to 11-character filename
Inspect	Yes
Copy Option	No
Console Procedure	Insert memory card→System→Back/Restore→Backup→Select backup file→Dial the new backup filename→Enter→Yes→Exit→Exit→Exit
PC Procedure	Insert memory card→F1→F9→F1→Select backup file→Type the new backup filename→F6→F1→F5→F5→F5

Procedure: Backup

Console Display/Instructions	Additional Information	PC
1 Insert the memory card into the PCMCIA interface slot on the processor module.		
See Figure 3–5, “Inserting the Memory Card.”		
2 Select the System menu.		
System Programming: > Make a selection System Extensions SysRenumber Options Operator Tables LinesTrunks AuxEquip Exit NightSrvce		F1

Console Display/Instructions	Additional Information	PC
3 Select Back/Restore.		
System: Make a selection Restart MaintenBusy SProg Port Date Mode Time Board Renum Back/Restore Exit		F9
4 Select Backup.		
Memory Card: Make a selection Backup Restore Auto Backup Exit		F1
5 Select the backup filename.		
Memory Card Backup: Make a selection BACK1.**** AUT01.**** BACK2.**** AUT02.**** BACK3.**** Exit	If you select AUTO.BACK1 or AUTO.BACK2, go to Step 8. You cannot rename either of these two files. If you select BACK1., BACK2., or BACK3. and do not want to rename the file, go to Step 8. Press the button or function key next to your selection.	
6 Rename the backup file (*n* = 1 to 11 characters).		
Backup File: Enter name BACK*x.mmdd* Punctuation Enter Backspace Exit A ' , B C - & D E . Space F	*x* = backup file selected in Step 5 *mm/dd* = current month and day Use Punctuation to toggle between the letters and punctuation. Enter or type [*filename*]. Use the buttons next to the display to specify the letters A through I and punctuation. Use the line/feature buttons to specify additional alphanumeric characters for labels. Use the template provided with the MLX-20L telephone to see which line buttons correspond to which alphanumeric characters.	

	Console Display/Instructions	Additional Information	PC
7	**Save your entry.**		
	Select **Enter**.	**Note**: F6, not F10.	F6
8	**Respond to the prompt.**		
	Backup *filename*: Do you want to continue? Yes No Exit	*filename* = file selected in Step 5 or entered in Step 6 Select **No** to terminate the backup. Go to Step 11. Select **Yes** to continue the backup.	 F2 F1
9	**Observe the backup progress screen.**		
	Backup *filename*: Backup in Progress, Please Wait. *xx%* completed Exit	*filename* = file selected in Step 5 or entered in Step 6 *xx%* = percentage of backup completed	
10	**Observe the backup completion screen.**		
	Backup *nnnnnnnnnn*: Backup Successfully Completed. Exit	*nnnnnnnnnn* = backup filename	
11	**Return to the System Programming menu.**		
	Select **Exit** three times.		F5 F5 F5

Automatic Backup

To preserve the most recent copy of your customized system data, you can program the system to automatically backup programming information onto the translation memory card. Automatic backups may be set for daily or weekly operation. If automatic backup is activated, the time may be set for daily backup (factory setting is 2:00 am) or the time and day may be set for weekly backup (factory setting is 2:00 am Sunday).

The system places the automatic backup into one of two designated files: AUTO.BACK1 and AUTO.BACK2. If both files are empty, the system places the backup in AUTO.BACK1. If both files already contain backups, the system selects the older of the two files and overwrites it. The system performs this file "toggle" each time it performs an automatic backup.

While the backup is in progress, you cannot access system programming functions, your Personal Directory, or alarm clock functions (any programmed alarms are temporarily deactivated).

If any type of programming is taking place at an extension during the automatic backup procedure, the backup is canceled. The system does not re-attempt the backup.

If an automatic backup fails for any reason (including a system-busy condition), all of the programmed alarm buttons on system operator consoles light and the information is recorded in both the permanent error log and the last 10 error logs. The system does not re-attempt the backup.

Also see "Backup Messages" for information about errors that may occur during the automatic backup procedure.

NOTE:
If an automatic backup fails for any reason (except when the failure results from the memory card being write-protected) the automatic backup feature is turned off. Follow the procedure below to reprogram automatic backups.

Summary: Automatic Backup

Programmable by	System manager
Mode	All
Idle Condition	Not required (No extensions are allowed to be in programming mode including the system programming console)
Planning Form	Form 1, System Planning
Factory Setting	Weekly backup: Sunday at 2:00 am (if daily backup is selected, time is factory set for 2:00 am)
Valid Entries	Daily: hhmm (00 to 23; 00 to 59) Weekly: dhhmm (0 to 6; 00 to 23; 00 to 59)
Inspect	No
Copy Option	No

Console Procedure	To program daily backup: Insert memory card→System→Back/Restore→Auto Backup→Daily→**Drop**→Dial time→Enter→Exit→Exit To program weekly backup: Insert memory card→System→Back/Restore→Auto Backup→Weekly→**Drop**→Dial day and time→Enter→Exit→Exit
PC Procedure	To program daily backup: Insert memory card→F1→F9→F2→F2→Alt + P→Type time→F10→F5→F5 To program weekly backup: Insert memory card→F1→F9→F2→F3→Alt + P→Type day and time→F10→F5→F5

Procedure: Automatic Backup

	Console Display/Instructions	Additional Information	PC
1	**Insert the memory card into the PCMCIA interface slot on the processor module.**		
2	**Select the System menu.**		
	System Programming: > Make a selection System Extensions SysRenumber Options Operator Tables LinesTrunks AuxEquip Exit NightSrvce		F1
3	**Select Back/Restore.**		
	System: Make a selection Restart MaintenBusy SProg Port Date Mode Time Board Renum Back/Restore Exit		F9

Console Display/Instructions	Additional Information	PC
4 Select Auto Backup.		

`Memory Card:`
`Make a selection`
`Backup  Restore`
`Auto Backup`
 	
`Exit`
		F2

5 Make a selection.		

`Auto MemCard Backup:`
`Select one`
`Off`
`Daily`
`Weekly`
 	
`Exit  Enter`
	Select **Off**, **Daily**, or **Weekly**	F1
		F2
		F3

6 Save your entry.	● ◆	
Select **Enter**.		F10
If you selected **Off** you have finished this procedure. Go to Step 7.		
If you selected **Daily** go to ● Daily Backup Procedure.		
If you selected **Weekly** go to ◆ Weekly Backup Procedure.		
7 Return to the System Programming menu.		
Select **Exit** two times.		F5 F5

● Daily Backup Procedure

1 Erase the current daily backup time (*xxxx*).		

`Daily MemCard Backup:`
`Enter hour (00-23) and`
`minutes (00-59) HHMM`
xxxx
 	
`Backspace`
`Exit  Enter`
	Press **Drop**.	Alt + P

	Console Display/Instructions	Additional Information	PC
2	**Enter the time when you want the automatic backup to run every day (*hh* = 00 to 23, *mm* = 00 to 59).**		

	`Daily MemCard Backup:`
	`Enter hour (00-23) and`
	`minutes (00-59) HHMM`
	
	`Backspace`
	`Exit  Enter`
		Dial or type [*hhmm*].	

3	**Save your entry.**		
	Select **Enter**.		F10
4	**Return to the System Programming menu.**		
	Select **Exit** two times.		F5 F5

◆ Weekly Backup Procedure

1	**Erase the current weekly backup day and time (*xxxxx*).**		

	`Weekly MemCard Backup:`
	`Enter day (0-6) hr (00-23)`
	`and min (00-59) DHHMM`
	xxxxx
	
	`Backspace`
	`Exit  Enter`
		Press **Drop**.	Alt + P

2	**Enter the day (*d* = 0 to 6) and time (*hh* = 00 to 23, *mm* = 00 to 59) when you want the automatic backup to run each week.**		

	`Weekly MemCard Backup:`
	`Enter day (0-6), hr (00-23)`
	`and min (00-59) DHHMM`
	
	`Backspace`
	`Exit  Enter`
		0 = Sunday, 1 = Monday, and so on.
		
		Dial or type [*dhhmm*].	

3	**Save your entry.**		
	Select **Enter**.		F10
4	**Return to the System Programming menu.**		
	Select **Exit** two times.		F5 F5

Backup Messages

During manual or automatic backup procedures, additional screens may appear to alert you to problems with the translation memory card, the backup file, or the backup procedure. This section contains displays of each screen and information about what to do if the screen appears.

NOTE:
The screens shown in this section are from the manual backup procedure; however, the screens that may appear in both the manual and automatic backup procedures are similar. The screens in both procedures differ only in the appearance of the first line. On the automatic backup screens, `Auto MemoryCard Backup` replaces `Memory Card Backup` shown on the screens below.

Backup Canceled

```
Backup x:
BACKUP IS CANCELED.
File has been DELETED.



Exit
```

x = backup filename

If the system detects an error, either on the memory card or with the backup file, or if you terminate the backup, this screen appears.

The backup file being created is deleted and the backup is terminated. You must repeat the backup procedure.

Card Removed While Backup Is in Progress

```
Backup x:
BACKUP IS CANCELED.
Verify that Memory Card
has been inserted
correctly.
File has been DELETED.
Exit
```

x = backup filename

The memory card is not inserted or is inserted incorrectly while a backup is in progress. The backup file that was being created is deleted and the backup is terminated. You must reinsert the memory card and repeat the backup procedure.

Card Missing or Card Not Inserted Correctly

```
Memory Card Backup:
Verify that Memory Card
has been inserted
correctly.


Exit
```

The memory card is either not inserted or is inserted incorrectly. The backup is terminated. You must reinsert the memory card and repeat the backup procedure. This screen may also appear if the wrong type of memory card is inserted and a backup or automatic backup is requested within one minute of insertion. Verify that the card is a translation memory card.

Card Is Write-Protected

```
Memory Card Backup:
Memory Card is Write-
Protected.
Reset Write-Protect Tab
on Memory Card.

Exit
```

The memory card is write-protected. You must remove the memory card, flip the write-protect tab, reinsert the memory card, and repeat the backup procedure.

CAUTION:
The memory card may be write-protected to avoid the accidental erasure of the backup files. Make certain this is not the case before you change the write-protect tab.

Card Failure

```
Memory Card Backup:
Backup Failure
Try a different file or
a new Memory Card.


Exit
```

If the card is damaged, repeat the backup with a different card. If a backup is in progress and fails, the system makes two additional attempts at the backup. At the start of each attempt, a message appears with the percentage of the backup that is completed. If the backup fails after three attempts, the screen shown above appears. Repeat the backup procedure using a different file and/or memory card.

Programming Procedures

4

Introduction

This chapter contains procedures for all of the advanced programming features and options available on the System Programming menu, where each of the procedures begins. It also contains summary information for all of the common programming features described in detail in Chapter 3, “Common Administrative Procedures.” Use one of the methods shown below to display the System Programming menu.

- At the console: **Menu**→`Sys Program`→`Exit`
- At the PC or with SPM: Type *spm*→Press any key→[F1]→[F5]

Before you begin any of the procedures in this chapter, you should read and understand all of the information presented in Chapter 1, “Programming Basics.”

Basic System Operating Conditions

The procedures in this section are all related to the system rather than to the operation of telephones, operator positions, lines, or trunks. These are operating conditions that must be set only once, when the system is new, or when you reset the system defaults.

NOTE:
You must reset the system time when Daylight Savings Time begins and ends.

This section contains the following programming procedures:

- System Restart

- Board Renumbering
- Mode of Operation
- Automatic Maintenance Busy

Programming summaries are included for the following procedures:

- System Programming Position Assignment
- System Language
- System Date
- System Time

See Chapter 3, “Common Administrative Procedures,” for detailed programming information.

System Restart

CAUTION:
This procedure is for qualified support personnel only.

Use this procedure to perform a System Restart (cold start). All calls are dropped when you perform this procedure. System programming is saved. Telephones with the Extension Status feature may lose toll restrictions as a result of a System Restart.

Summary: System Restart

Programmable by	Qualified support personnel
Mode	All
Idle Condition	Not required
Planning Form	Not applicable
Factory Setting	None
Valid Entries	None
Inspect	No
Copy Option	No
Console Procedure	System→Restart→Yes
PC Procedure	F1 → F1 → F1

Procedure: System Restart

Console Display/Instructions	Additional Information	PC

1 Select the System menu.

```
System Programming:      >
Make a selection
System        Extensions
SysRenumber   Options
Operator      Tables
LinesTrunks   AuxEquip
Exit          NightSrvce
```

F1

2 Select System Restart.

```
System:
Make a selection
Restart       MaintenBusy
SProg Port    Date
Mode          Time
Board Renum   Back/Restore
Exit
```

F1

3 Respond to the query.

```
System Restart:
System will be down ...
Do you want to continue?
Yes
No

Exit
```

To restart the system select **Yes**. The system restart screen appears. F1

To terminate the restart and return to the System menu select **No**, then select **Exit**. F2 F5

```
Restart
System is restarting
```

The session is finished, and the system restarts. You must enter system programming again to continue.

System Programming Position Assignment

Use this procedure to reassign the extension used for system programming. This extension should not be the same extension as that used for the operator position. The system programming position can be reassigned only to one of the first five extension jacks on the first MLX module. Only one system programming console is allowed per system.

If you are programming on the console, be aware of the following:

- The console must be connected to the extension currently assigned for system programming.
- As soon as you change the system programming extension, the system programming session is terminated. To proceed with system programming, you must connect the system programming console to the newly assigned extension and enter system programming again.

NOTE:
The telephone used for system programming must be an MLX-20L.

See Chapter 3, “Common Administrative Procedures” for detailed information.

Summary: System Programming Position Assignment

Programmable by	System manager
Mode	All
Idle Condition	Not required
Planning Form	Form 1, System Planning
Factory Setting	First extension jack on the first MLX module (also set as an operator position)
Valid Entries	Extension number of one of the first five extension jacks on the first MLX module
Inspect	No
Copy Option	No
Console Procedure	System→SProg Port→**Drop**→Dial ext. no.→Enter→Exit
PC Procedure	F1→F2→Alt + P→Type ext. no.→F10→F5

System Language

Use this procedure to set the system language (English, French, and Spanish) for the following options:

- System language.
- Station Message Detail Recording (SMDR) reports. See “System Features.”
- Print reports. See “Printing Reports.”
- Extensions. See “Optional Telephone Features.”

NOTE:
MERLIN LEGEND Communication System Release 1.0 does not offer a choice of languages.

See Chapter 3, “Common Administrative Procedures” for detailed information.

Summary: System Language

Programmable by	System manager
Mode	All
Idle Condition	Not required
Planning Form	Form 1, System Planning
Factory Setting	English
Valid Entries	English, French, Spanish
Inspect	No
Copy Option	No
Console Procedure	**More**→Language→SystemLang→Yes→Select a language →Enter
PC Procedure	PgUp→F6→F1→F3→Select a language→F10

Board Renumbering

CAUTION:
This procedure is to be performed by qualified support personnel only.

Use this procedure to renumber boards that have already been installed. This procedure restarts the system (system programming is not lost). Note that this is not the same procedure used with the Boards option, which is available to qualified service personnel with SPM only.

Summary: Board Renumbering

Programmable by	Qualified support personnel only
Mode	All
Idle Condition	System idle
Planning Form	Not applicable
Factory Setting	None
Valid Entries	Not applicable
Inspect	Not applicable
Copy Option	Not applicable

Console Procedure System→Board Renum→Yes

PC Procedure F1 → F4 → F2

Procedure: Board Renumbering

	Console Display/Instructions	Additional Information	PC
1	**Select the System menu.**		
	System Programming: > Make a selection System Extensions SysRenumber Options Operator Tables LinesTrunks AuxEquip Exit NightSrvce		F1
2	**Select Board Renumbering.**		
	System: Make a selection Restart MaintenBusy SProg Port Date Mode Time Board Renum Back/Restore Exit		F4
3	**Respond to the prompt.**		
	Board Renumber: System will be down .... Do you want to continue? Yes No Exit	To continue the Board Renumbering procedure, select **Yes**. The renumbering information screen appears. To terminate this procedure and return to System menu select **No**, then select **Exit**.	F2 F3 F5
	Board Renumber: System is Renumbering	When renumbering completes, the system returns to the screen shown in Step 1.	

Mode of Operation

The system mode—Key, Behind Switch, or Hybrid/PBX—determines how the system operates and directly affects the following operations:

- How lines and/or trunks are provided to users
- Types of operator consoles allowed
- Features available

Changing this option causes a system restart and terminates the programming session. You must enter system programming again to program other features.

NOTE:
The Hybrid/PBX option is not available if the control unit processor module has been modified to operate in Permanent Key mode only. See the *Equipment and Operations Reference*.

The following options cannot be programmed for Behind Switch or Key systems:

- Automatic Route Selection (ARS)
- Pools
- Queued Call Consoles (QCCs) and associated features
- Direct Inward Dialing (DID) Trunks
- System Access buttons
- Dial Plan Routing (PRI)
- Call by Call Services (PRI)

The Ground-Start lines/trunks option cannot be programmed if the processor module has been modified for Permanent Key mode operation only.

Summary: Mode of Operation

Programmable by	System manager
Mode	All
Idle Condition	System idle
Planning Form	Form 1, System Planning
Factory Setting	Hybrid/PBX
Valid Entries	Key, Behind Switch, Hybrid/PBX
Inspect	No
Copy Option	No
Console Procedure	System→Mode→Select mode→Enter
PC Procedure	F1 →F3 →Select mode→F10

Procedure: Mode of Operation

	Console Display/Instructions	Additional Information	PC
1	**Select the System menu.**		
	System Programming: > Make a selection System Extensions SysRenumber Options Operator Tables LinesTrunks AuxEquip Exit NightSrvce		F1
2	**Select Mode.**		
	System: Make a selection Restart MaintenBusy SProg Port Date Mode Time Board Renum Back/Restore Exit		F3
3	**Select the mode.**		
	Mode: Select one Key Hybrid/PBX BehndSwtch Exit Enter	Select **Key**, **Hybrid/PBX**, or **BehndSwtch**.	F1 F2 F3
4	**Save your entry.**		
	Select **Enter**.	The session is terminated, and the system restarts. You must enter system programming again to continue.	F10

Automatic Maintenance Busy

Automatic Maintenance Busy allows the system to take a malfunctioning trunk out of service for outgoing calls (incoming calls are never blocked). This prevents faulty outside facilities from causing disruptions in outgoing calling patterns.

For optimal performance, enable Automatic Maintenance Busy for Hybrid/PBX systems with pooled trunks.

NOTE:
No more than 50 percent of the trunks in a trunk pool are allowed to be placed in the maintenance busy state at one time unless; the central office has failed to disconnect a trunk (which prevents anyone from using that trunk); or an entire trunk module is manually taken out of use (a maintenance-busy state deliberately caused by the user).

Summary: Automatic Maintenance Busy

Programmable by	System manager
Mode	All
Idle Condition	Not required
Planning Form	Form 1, System Planning
Factory Setting	Disabled
Valid Entries	Enabled, Disabled
Inspect	No
Copy Option	No
Console Procedure	To disable Automatic Maintenance Busy: System→MaintenBusy→Disable→Enter→Exit To enable Automatic Maintenance Busy excluding tie trunks: System→MaintenBusy→Enable→Enter→Exit To enable/disable with tie trunks: System→MaintenBusy→Enable→Enter→ Enable or Disable→Enter→Exit
PC Procedure	To disable Automatic Maintenance Busy: F1 → F6 → F2 → F10 → F5 To enable Automatic Maintenance Busy excluding tie trunks: F1 → F6 → F1 → F10 → F5 To enable/disable with tie trunks: F1 → F6 → F1 → F10 → F1 or F2 → F10 → F5

Procedure: Automatic Maintenance Busy

	Console Display/Instructions	Additional Information	PC
1	**Select the System menu.**		
	System Programming: > Make a selection System Extensions SysRenumber Options Operator Tables LinesTrunks AuxEquip Exit NightSrvce		F1
2	**Select Automatic Maintenance Busy.**		
	System: Make a selection Restart MaintenBusy SProg Port Date Mode Time Board Renum Back/Restore Exit		F6
3	**Enable or disable Automatic Maintenance Busy.**		
	Auto-Maintenance Busy: Select one Enable Disable Exit Enter	**Disable** leaves malfunctioning trunks available for outgoing calls. Select **Enable** or **Disable**.	F1 F2
4	**Save your entry.**		
	Select **Enter**.	If you selected **Enable** or **Disable** and your system has no tie trunks, you have finished this procedure. Go to Step 7.	F10
5	**Select the malfunctioning tie trunk service.**		
	Auto Busy TIE Trunks: Select one Enable Disable Exit Enter	If you selected **Enable** and your system has tie trunks, specify whether to take malfunctioning tie trunks out of service automatically or leave malfunctioning tie trunks available for outgoing calls. Select **Enable** or **Disable**.	F1 F2
6	**Save your entry.**		
	Select **Enter**.		F10
7	**Return to the System Programming menu.**		
	Select **Exit**.		F5

Set System Date

The System Date feature allows you to set the month, day, and year that appear on MLX display telephones and on Station Message Detail Recording (SMDR) reports. See Chapter 3, “Common Administrative Procedures” for detailed information.

NOTE:
If you are planning to use the SMDR feature, make sure the current date is set.

Summary: Set System Date

Programmable by	System manager
Mode	All
Idle Condition	Not required
Planning Form	Form 1, System Planning
Factory Setting	01-01-00
Valid Entries	Month: 01 to 12 Day: 01 to 31 Year: 00 to 99
Inspect	No
Copy Option	No
Console Procedure	System→Date→**Drop**→Dial current date→Enter→Exit
PC Procedure	F1→F7→Alt + P→Type current date→F10→F5

Set System Time

The System Time feature allows you to set the time that appears on MLX display telephones and on SMDR reports. See Chapter 3, “Common Administrative Procedures” for detailed information.

Summary: Set System Time

Programmable by	System manager
Mode	All
Idle Condition	Not Required
Planning Form	Form 1, System Planning
Factory Setting	0000
Valid Entries	0000 to 2359
Inspect	No
Copy Option	No
Console Procedure	System→Time→**Drop**→Dial current time→Enter→Exit
PC Procedure	F1→F8→Alt + P→Type current time→F10→F5

System Renumbering

The procedures in this section are used to assign the 2-digit, 3–digit, and Set Up Space numbering plans.

NOTE:
System Renumbering is called Flexible Numbering in the MERLIN® II Communications System. This is *not* the same as Board Renumbering, an option used when modules in the control unit are changed.

Do not attempt to assign a numbering plan without Planning Forms 2a, System Numbering: Extension Jacks; 2b, System Numbering: Digital Adjuncts; and 2d, System Numbering: Special Renumbers. Form 6a, Optional Operator Features, is needed to assign a DSS **Page** button.

This section contains the following programming procedures:

- Select System Numbering Plan
- Direct Station Selector (DSS) **Page** Button Assignment

This section contains summaries for the following procedures which are described in detail in Chapter 3, “Common Administrative Procedures”:

- Single Renumbering
- Block Renumbering

You select only one of the numbering plans (2-digit numbering, 3-digit numbering, or Set Up Space numbering). In addition, you may need to perform single and/or block renumbering. You do not need to assign DSS **Page** buttons unless the system programming console or one of the operator positions is connected to a DSS. No matter which procedures you need to perform, assign the numbering plan first, then do single and/or block renumbering, and finally, assign DSS **Page** buttons (if necessary).

Use the single renumbering procedure any time the extension numbers you are changing *from* or *to* are not sequential.

Block renumbering is quicker, but you can use block renumbering only when the extension numbers you are changing *from* and *to* are sequential.

When trunk or extension modules are removed from the control unit, the remaining modules must be rearranged so that no empty slots remain. The system does not acknowledge any modules installed after an empty slot; therefore, if the system is renumbered, extensions are not assigned to extension jacks after the empty slots.

NOTE:
Figures 4–1, 4–2, and 4–3 show the default settings in the gray spaces. Extensions can be renumbered to any number shown in the white spaces.

0	Operator Console (not flexible) 0					
1	Extensions 10–19					
2	Extensions 20–29					
3	Extensions 30–39					
4	Extensions 40–49					
5	Extensions 50–59					
6	Extensions 60–66	Extra Extensions 6700–6842	6843–6849	Extra MFMs/ Terminal Adapters 6850–6992	6993–6999	
7	Main Pool 70	MFMs/ Terminal Adapters 710–766	767–769	Calling Groups 770–791,7920–7929	Paging Groups 793–799	
8	800*	Trunks 801–880	Park 881–888	889†	Pools 890–899	
9	ARS Access (Hybrid/PBX Mode) / Idle Line Access 9					

* Listed Directory Number (QCC Queue)
† Remote Access
NOTE: “0” and “10” are the same station.

Figure 4–1. 2-Digit Numbering

0	Operator Console (not flexible) 0				
1	Extensions 100–199				
2	Extensions 200–299				
3	MFMs/Terminal Adapters 300–399				
4	MFMs/Terminal Adapters 400–499				
5	500–599				
6	600–699				
7	Main Pool 70	71–76	Calling Groups 770–791, 7920–7929	Paging Groups 793–799	
8	800*	Trunks 801–880	Park 881–888	889†	Pools 890–899
9	ARS Access (Hybrid/PBX mode)/Idle Line Access				

* Listed Directory Number (QCC)
† Remote Access
NOTE: “0” and “100” are the same station.

Figure 4–2. 3-Digit Numbering

0	Operator Console (not flexible) 0					
1	100–199					
2	200–299					
3	300–399					
4	400–499					
5	500–599					
6	600–699					
7	Main Pool 70	Extensions 7100–7299	MFMs/Terminal Adapters 7300–7499	7500–7699	Calling Group 770–791, 7920–7929	Paging Groups 793–799
8	800*	Trunks 801–880		Park 881–888	889†	Pools 890–899
9	ARS Access (Hybrid/PBX mode)/Idle Line Access 9					

* Listed Directory Number (QCC).
† Remote Access
NOTE: “0” and “7001” are the same station.

Figure 4–3. Set Up Space Numbering

Select System Numbering Plan

WARNING:
To avoid possible loss of system programming information, renumber the system before you program the rest of the options described in this chapter.

The three available system numbering plans listed below appear on System Planning Form 2a.

- **2-Digit.** This plan is for systems with fewer than 50 extensions and no plans to exceed that number in the foreseeable future. Each of the first 58 extension jacks is assigned a 2-digit extension number, beginning with 10 and ending with 67. Any remaining extensions are assigned 4-digit numbers, starting with 6700 and ending with 6842.
- **3-Digit.** This plan is for systems with 50 or more extensions or plans to grow to that number in the foreseeable future. All extensions are assigned a 3-digit number, starting with 100 and ending with 299.

- **Set Up Space.** This plan is for systems with a need to customize extension numbers or use extension numbers of varying lengths (one to four digits). All extensions are assigned 4-digit numbers in the 7000 range. Extension numbers 1000 through 6999 are also available for use when you renumber.

In all three numbering plans, the system assigns 3-digit extension numbers to pools (Hybrid/PBX only), calling groups, paging groups, remote access codes, the Listed Directory Number, park codes, and Idle Line Access (Key and Behind Switch modes). In addition, the system assigns 9 for Automatic Route Selection (Hybrid/PBX only) and Idle Line Access (Key and Behind Switch only). Zero (0) represents a special extension number—actually a fixed dial code—for the primary operator or QCC queue. Any extension number except 0 can be renumbered.

Extension numbers can be composed of any combination of digits; however, no number can begin with 0. Trunk numbers (801 to 880) are considered to be extensions and can be renumbered.

The system does not provide a message to indicate a successful renumber when either the 2-digit or 3-digit numbering plan is selected. For the Set Up Space numbering plan, the system provides a message indicating that all extensions are in the 7000 range.

CAUTION:
Select `Exit` *on the console or* [F5] *on the PC when you have finished selecting the numbering plan. If you press* **Home***, extensions may remain in the forced idle condition (indicated when the LED next to each DSS button is on). To restore extensions to their normal operating state, restart the system.*

Summary: Select System Numbering Plan

Programmable by	System manager
Mode	All
Idle Condition	System idle
Planning Form	Form 2a, System Numbering: Extension Jacks
Factory Setting	2-digit
Valid Entries	2–digit, 3–digit, Set Up Space
Inspect	No
Copy Option	No
Console Procedure	`SysRenumber`→`Default Numbering`→Select numbering plan→`Exit`→`Exit`
PC Procedure	[F2]→[F1]→Select numbering plan→[F5]→[F5]

Procedure: Select System Numbering Plan

	Console Display/Instructions	Additional Information	PC
1	**Select the System Renumbering menu.**		
	System Programming: > Make a selection System Extensions SysRenumber Options Operator Tables LinesTrunks AuxEquip Exit NightSrvce		F2
2	**Select Default Numbering.**		
	System: Make a selection Default Numbering Single Block Exit	*If you get the System Busy message, wait for an idle condition or exit system programming and try again later.*	F1
3	**Select the appropriate system numbering plan.**		
	Default Numbering: Make a selection 2-Digit 3-Digit SetUp Space Exit	Select **2-Digit** and go to Step 5. Select **3-Digit** and go to Step 5. Select **SetUp Space** and continue with Step 4.	F1 F2 F3
4	**Observe the initialize space screen.**		
	Initialize Space: AllExtensions 7000 range Exit	If you selected **SetUp Space** you have finished this procedure. Select **Exit** and go to Step 6.	F5
5	**Select the type of extension to renumber.**		
	System Renumber: Make a selection Default Numbering Single Block Exit	To change individual extension numbers, select **Single** and go to “Single Renumbering.” To change a block of extension numbers, select **Block** and go to “Block Renumbering.”	F2 F3

	Console Display/Instructions	Additional Information	PC
6	**Return to the System Programming menu.**		
	Select `Exit` two times.		F5 F5

Single Renumbering

Use this procedure to assign a specified extension number to a telephone, accessory, line, pool (Hybrid/PBX only), calling group, paging group, or Listed Directory Number. Single renumbering is also used for Remote Access, Park, Idle Line Access (Key and Behind Switch only), and Automatic Route Selection (Hybrid/PBX only).

See Chapter 3, “Common Administrative Procedures” for detailed information.

CAUTION:
Select `Exit` *on the console or* F5 *on the PC after renumbering extensions. If you press* **Home**, *extensions may remain in the forced idle condition (indicated when the LED next to each DSS button is on). To restore extensions to their normal operating state, restart the system.*

When required, this procedure should be performed immediately following the selection of a system numbering plan.

Summary: Single Renumbering

Programmable by	System manager
Mode	All
Idle Condition	System idle
Planning Form	Form 2a, System Numbering: Extension Jacks Form 2b, System Numbering: Digital Adjuncts Form 2d, System Numbering: Special Renumbers
Factory Setting	Not applicable
Valid Entries	Old and new extension numbers
Inspect	Yes
Copy Option	No
Console Procedure	`SysRenumber`→`Single`→Select item→Dial old ext. no.→`Enter`→Dial new ext. no.→`Enter`→`Exit`→`Exit`
PC Procedure	F2 →F2 →Select item→Type old ext. no.→F10 →Type new ext. no.→F10 →F5 →F5

Block Renumbering

Use this procedure to assign extension numbers to a group of extensions, accessories, or lines. Both the original numbers and the numbers they are being changed to must be sequentially numbered.

When required, this procedure should be performed immediately following the selection of a system numbering plan.

See Chapter 3, “Common Administrative Procedures” for detailed information.

CAUTION:
Select `Exit` *on the console or* [F5] *on the PC when you have finished renumbering extensions. If you press* **Home***, extensions may remain in the forced idle condition (indicated when the LED next to each DSS button is on). To restore extensions to their normal operating state, restart the system.*

Summary: Block Renumbering

Programmable by	System manager
Mode	All
Idle Condition	System idle
Planning Form	Form 2a, System Numbering: Extension Jacks Form 2b, System Numbering: Digital Adjuncts Form 2d, System Numbering: Special Renumbers
Factory Setting	Not applicable
Valid Entries	Old and new extension numbers
Inspect	Yes
Copy Option	Yes
Console Procedure	`SysRenumber`→`Block`→Select type of group→Dial no. of first group member→`Enter`→Dial no. of last group member→`Enter`→Dial new beginning no.→`Enter`→`Exit`→`Exit`→`Exit`
PC Procedure	[F2]→[F3]→Select type of group→Type no. of first group member→[F10]→Type no. of last group member→[F10]→Type new beginning no.→[F10]→[F5]→[F5]→[F5]

Direct Station Selector (DSS) Page Buttons

Use this procedure to set the three **Page** buttons on the DSS to correspond to the system numbering plan. This procedure assigns extension numbers to DSS buttons. You cannot program individual buttons on a DSS; this is the only method for programming DSS buttons.

Page button assignment should be sequential. If only one DSS is attached, each **Page** button assignment sets the console for a range of 50 extension numbers: Page 1: 0 to 49; Page 2: 50 to 99; Page 3: 100 to 149.

If two DSSs are attached, each **Page** button assignment sets the console for a range of 100 extension numbers. If two DSSs are attached to the console, change the factory setting so that the difference between extension numbers assigned to the range is at least 100. For example, assign Page 1 to begin with extension 10, Page 2 to begin with extension 110, and Page 3 to begin with extension 210.

Operator Park Zone codes must be included in the extension number range specified for one of the **Page** buttons.

CAUTION:
Select `Exit` *on the console or* [F5] *on the PC when you have finished this procedure. If you press* **Home***, extensions may remain in the forced idle condition (the LED next to each DSS button is on), and the system may have to be restarted.*

Summary: Assign Direct Station Selector Page Buttons

Programmable by	System manager
Mode	All
Idle Condition	Not required
Planning Form	Form 6a, Optional Operator Features
Factory Setting	Page 1=0; Page 2=50; Page 3=100
Valid Entries	1, 2, 3
Inspect	Yes
Copy Option	No
Console Procedure	`SysRenumber`→`Single`→**More**→`DSS Buttons`→Dial page no.→`Enter`→Dial first ext. no.→`Enter`→`Exit`→`Exit`
PC Procedure	[F2]→[F2]→[PgUp]→[F1]→Type page no.→[F10]→Type first ext. no.→[F10]→[F5]→[F5]

Procedure: Assign Direct Station Selector Page Buttons

	Console Display/Instructions	Additional Information	PC
1	**Select the System Renumber menu.**		
	System Programming: > Make a selection System Extensions SysRenumber Options Operator Tables LinesTrunks AuxEquip Exit NightSrvce		F2
2	**Select Single renumbering.**		
	System Renumber: Make a selection Default Numbering Single Block Exit		F2
3	**Go to the second screen of the System Renumber menu.**		
	System Renumber: > Make a selection Lines GrpCalling Extensions Adjuncts Pools Park Group Page ARS DialOut Exit RemoteAccs	Press **More**.	PgUp
4	**Select DSS Buttons.**		
	System Renumber: Make a selection DSS Buttons ListDirctNo Exit		F1
5	**Enter the number of the Page button you want to program (*n* =1 to 3).**		
	DSS Page Buttons: Enter button number(1-3) *n* Backspace Exit Enter	Dial or type [*n*].	

	Console Display/Instructions	Additional Information	PC
6	**Save your entry.**		
	Select **Enter**.		F10
7	**Erase the current dial code (*nnnn*).**		
	DSS Page Button *n*: Enter first dial code of group (multiple of 50) *nnnn* Backspace Next Exit Enter	*n* = page button entered in Step 5 Press **Drop**.	Alt + P
8	**Enter the first extension of the group of 50 or 100 extension numbers.**		
		Dial or type [*nnnn*]. If you reassign an extension from one page to another, you must repeat Steps 4 through 7 for each page before you return to the System Programming menu.	
9	**Continue with additional entries or go to Step 10.**		
	Select **Next**.	Return to Step 7. The next DSS Page Button will be displayed on Line 1.	F9
10	**Save your entry.**		
	Select **Enter**.		F10
11	**Return to the System Programming menu.**		
	Select **Exit** two times.		F5 F5

System Operator Positions

A system operator position, for a Queued Call Console (QCC) operator or a Direct-Line Console (DLC) operator, should be programmed before you program lines or trunks.

QCC Operator Position

The QCC operator position is available only for Hybrid/PBX systems. The DLC operator position is available in any mode and must be programmed if you have Call Management Systems connected to any operator extension jacks. For detailed programming procedures see Chapter 3, "Common Administrative Procedures."

This procedure applies to Hybrid/PBX systems only.

IMPORTANT:
If you want to add or remove QCC operator positions, the following conditions apply:

- *If other QCC positions remain in your system, the primary QCC operator position cannot be removed.*
- *When QCC operator positions are added, the primary QCC operator position should be the first one added.*
- *If QCC operator positions are being removed, the primary QCC operator position must be the last one removed.*

Summary: QCC Operator Positions

Programmable by	System manager
Mode	Hybrid/PBX
Idle Condition	System idle
Planning Form	Form 2a, System Numbering: Extension Jacks
Factory Setting	Type: DLC
Valid Entries	First or fifth extension jack on MLX module (maximum: two per module; maximum: four QCCs per system)
Inspect	Yes
Copy Option	No
Console Procedure	`Operator`→`Positions`→`Queued Call`→Dial ext. no.→`Enter`→`Store All`
PC Procedure	[F3]→[F1]→[F2]→Type ext. no.→[F10]→[F3]

DLC Operator Positions

DLC operator positions can be assigned to the first and fifth extension jacks on the first modules with digital or analog multiline extension jacks. A maximum of eight DLC operator positions can be assigned. For detailed programming procedures see Chapter 3, “Common Administrative Procedures.”

Summary: Identify or Remove DLC Operator Positions

Programmable by	System manager
Mode	All
Idle Condition	System idle
Planning Form	Form 2a, System Numbering: Extension Jacks
Factory Setting	Type: DLC
Valid Entries	First or fifth extension jack on MLX module (maximum: two per module; maximum: eight DLCs per system)
Inspect	Yes
Copy Option	No
Console Procedure	`Operator`→`Positions`→`Direct Line`→Dial ext. no.→ `Enter`→`Store All`
PC Procedure	[F3]→[F1]→[F1]→Type ext. no. [F10]→[F3]

Lines and Trunks

The procedures in this section are used to assign optional features to individual lines and trunks. The following optional features can be assigned:

- Type of Trunk
- Outmode Signaling for Loop- or Ground-Start Trunks
- Rotary Trunk Digit Transfer
- Disconnect Signaling Reliability
- Toll Type
- Hold Disconnect Interval
- Principal User for Personal Line
- QCC Queue Priority
- QCC Operator to Receive Calls
- Incoming Call Line Identification Delay
- Trunks to Pools Assignment

The Copy Options feature (described at the end of this section) allows you to copy several optional features from an idle trunk. This option eliminates the need to individually enter each feature.

Separate sections cover “DS1 Facilities,” “Tie Trunks,” “DID Trunks,” “PRI Facilities,” and “BRI Facilities.”

A slot is the physical location of the individual module on the control unit. There is a maximum of 17 slots which are numbered as follows:

- Basic carrier: slots 1 through 5
- First expansion carrier: slots 6 through 11
- Second expansion carrier: slots 12 through 17

A port is a line or trunk jack on the module. Individual modules support different numbers of ports. On any module, port 1 is the lowest physical jack position. Lines connect equipment to the switch and trunks connect a switch to a switch. Lines and trunks have logical IDs, a unique numeric identifier for each extension and trunk jack in the communications system control unit. Lines are numbered from 1 to 144, while trunks are numbered from 801 to 880. An MLX extension port has 2 logical IDs per 1 physical jack.

Type of Trunk

Use this procedure to specify the type of trunk, loop-start (LS) or ground-start (GS), for each outside trunk connected to one of the following modules:

- 400 GS/LS
- 408 GS/LS
- 800 GS/LS
- 408 GS/LS-MLX
- 800 GS/LS-ID (loop-start trunks only)

Any combination of trunk types (all loop-start, all ground-start, or some of each) is permissible.

This procedure is not used for a system registered with a KF registration number (Key or Behind Switch). Ground-start trunks are allowed only for systems with an MF (Hybrid) or PF (PBX) registration number.

Summary: Type of Trunk

Programmable by	System manager
Mode	All
Idle Condition	
Planning Form	Form 2c, System Numbering: Line/Trunk Jacks
Factory Setting	All loop-start
Valid Entries	All Ground, All Loop, Ground-Start, Loop-Start
Inspect	Yes
Copy Option	Yes
Console Procedure	LinesTrunks→LS/GS/DSL→Dial slot no.→Enter→Select trunk type→Dial port no.→Enter→Exit→Exit
PC Procedure	[F4]→[F1]→Type slot no.→[F10]→Select trunk type→Type port no.→[F10]→[F5]→[F5]

Procedure: Type of Trunk

	Console Display/Instructions	Additional Information	PC
1	**Select the Lines and Trunks menu.**		
	System Programming: > Make a selection System Extensions SysRenumber Options Operator Tables LinesTrunks AuxEquip Exit NightSrvce		F4
2	**Select Loop-Start/Ground-Start/DS1.**		
	Lines and Trunks: > Make a selection LS/GS/DS1 PRI TIE Lines Copy TT/LS Disc RemoteAccss DID Pools Exit Tool Type		F1
3	**Enter the slot number in the control unit that contains the module (*nn* = 1 to 17).**		
	Loop/Ground/DS1: Enter slot number (1-17) Backspace Exit Enter	Module is: 400, 408, 408GS/LS-MLX, 800 GS/LS, or 800 GS/LS-ID. Dial or type [*nn*].	
4	**Save your entry.**		
	Select **Enter**.		F10
5	**Specify the type of trunks connected to the module.**		
	**** GS/LS Slot *xx*: Select one GroundStart All Ground Loop Start All Loop Exit	**** = 400, 408, 408-MLX, or 800 modules *xx* = slot number entered in Step 3 Select **GroundStart** or **Loop Start** and go to Step 6. Or, select **All Ground** or **All Loop** and go to Step 9.	 F1 F2 F6 F7

	Console Display/Instructions	Additional Information	PC
6	**Enter the port numbers that have ground-start or loop-start trunks connected. 400 and 408 ports: *n* = 1 to 4; 800 ports: *n* = 1 to 8.**		

	`**** Start Slot xx:`
	`Enter port no. (1-8)`
	
	`Backspace  Next`
	`Exit  Enter`
		**** = option name selected in Step 5
		xx = slot number entered in Step 3
		
		NOTE:
		If you get the Trunk Busy message, wait for an idle condition or exit system programming and try again later.	

		Dial or type [*n*].	
7	**Continue to assign trunk types or go to Step 8.**		
	Select **Next**.		F9
		Return to Step 6. The next slot number will be displayed on Line 1.	
8	**Save your entry.**		
	Select **Enter**.		F10
9	**Return to the System Programming menu.**		
	Select **Exit** two times.		F5 F5

Outmode Signaling for Loop- or Ground-Start Trunks

Use this procedure to identify either touch-tone signaling or rotary-dial signaling for outgoing calls placed by using the specified loop- or ground-start trunk.

NOTE:
Since the factory setting is touch-tone, this procedure is not required if your system has only touch-tone lines/trunks.

Summary: Outmode Signaling for Loop- or Ground-Start Trunks

Programmable by	System manager
Mode	Loop-Start: All; Ground-Start: Hybrid/PBX only
Idle Condition	Not required
Planning Form	Form 2c, System Numbering: Line/Trunk Jacks
Factory Setting	Touch-tone
Valid Entries	Touch-tone, Rotary
Inspect	No
Copy Option	Yes

Console Procedure	To program a single line/trunk: LinesTrunks→TT/LS Disc→Outmode→Select entry mode →Dial no. of the line/trunk→Enter→Exit→Exit→Exit To program a block of lines/trunks: LinesTrunks→TT/LS Disc→OutMode→Select block of lines/trunks→Toggle LED On/Off→Enter→Exit→Exit→ Exit
PC Procedure	To program a single line/trunk: F4 → F3 → F1 → F6 →Type no. of the line/trunk→F10 → F5 → F5 → F5 To program a block of lines/trunks: F4 → F3 → F1 →Select block of lines/trunks→Toggle letter G On/Off→F10 → F5 → F5 → F5

Procedure: Outmode Signaling for Loop- or Ground-Start Trunks

	Console Display/Instructions	Additional Information	PC
1	**Select the Lines and Trunks menu.**		
	System Programming: > Make a selection System Extensions SysRenumber Options Operator Tables LinesTrunks AuxEquip Exit NightSrvce		F4
2	**Select Touch-Tone/Loop-Start Disconnect.**		
	Lines and Trunks: > Make a selection LS/GS/DSL PRI TIE Lines Copy TT/LS Disc RemoteAccss DID Pools Exit Tool Type		F3
3	**Select Outward Dialing Mode.**		
	TouchTone/LS Disconnect: Make a selection Outmode LS Disconnect Exit Enter		F1

	Console Display/Instructions	Additional Information	PC
4	**Select the outward trunk dial line(s).**	● ◆	
	OutTrunk Dial: Enter Trunks w/TouchTone Lines 01-20 Entry Mode Lines 21-40 Lines 41-60 Lines 61-80 Exit	For a single line, go to ● Single Line Procedure. For a block of lines, go to ◆ Block Procedure. .	

● Single Line Procedure

1	**Specify entry mode.**		
	Select **Entry Mode**.		F6
2	**Enter the number of the line/trunk with touch-tone dialing.**		
	OutTrunk Dial: Enter Trunks w/TouchTone Delete Backspace Exit Enter	Dial or type [*nnn*].	↵
3	**Assign or remove touch tone signaling from the line/trunk.**		
	Select **Enter** or **Delete**.	You may continue to assign or remove touch tone signaling from additional lines/trunks by repeating Steps 2 and 3.	F10 F8
4	**Return to the System Programming menu.**		
	Select **Exit** three times.		F5 F5 F5

◆ Block Procedure

1	**Specify the block of 20 lines associated with 20 buttons on the system programming console.**	
	Select **Lines 01-20**	F1
	Lines 21-40	F2
	Lines 41-60	F3
	Lines 61-80.	F4

	Console Display/Instructions	Additional Information	PC
2	**Specify touch-tone or rotary signaling for each block.**		
		Toggle the green LED on or off as required. On = touch-tone. Off = rotary.	
3	**Return to the System Programming menu.**		
	Select **Exit** three times.		F5 F5 F5

Rotary Trunk Digit Transfer

Use this procedure to designate whether dialed digits on rotary dial lines/trunks are sent one by one as they are dialed (no delay), or are stored and sent when dialing is completed (delay). Contact your service provider for more information about the appropriate setting.

Summary: Rotary Trunk Digit Transfer

Programmable by	System manager
Mode	All
Idle Condition	Not required
Planning Form	Form 8a, System Features
Factory Setting	No Delay
Valid Entries	Delay, No Delay
Inspect	No
Copy Option	No
Console Procedure	Options→**More**→Rotary→Select option→Enter→Exit
PC Procedure	F7→PgUp→F4→Select option→F10→F5

Procedure: Rotary Trunk Digit Transfer

	Console Display/Instructions	Additional Information	PC
1	**Select the Options menu.**		
	System Programming: > Make a selection System Extensions SysRenumber Options Operator Tables LinesTrunks AuxEquip Exit NightSrvce		F7

	Console Display/Instructions	Additional Information	PC
2	**Go to the second screen of the Options menu.**		

	`Options: >`
	`Make a selection`
	`Transfer  Callback`
	`CampOn  Ext Status`
	`CallParkRtn  SMDR`
	`Delay Ring  InsideDial`
	`Exit  ReminderSrv`
		Press **More**.	PgUp

3	**Select Rotary.**		

	`Options: >`
	`Make a selection`
	`Unassigned  Cover Delay`
	`BehndSwitch  Inter-Digit`
	`RecallTimer  Ringing Freq`
	`Rotary  SecDT Timer`
	`Exit`
			F4

4	**Specify a delay or no delay.**		

	`Rotary Operation:`
	`Select one`
	`Delay`
	`No Delay`
	
	`Exit  Enter`
		Select `Delay` or
		`No Delay`.
			F1
			F2

5	**Save your entry.**		
	Select `Enter`.		F10
6	**Return to the System Programming menu.**		
	Select `Exit`.		F5

Ringing Frequency

Use this procedure to program the ringing frequency on an 016 module. Contact your service provider for more information about the appropriate setting. The 016 module is available only in Release 4.0 and later.

Summary: Ringing Frequency

Programmable by	System manager
Mode	All
Idle Condition	Not required
Planning Form	Form 8a, System Features

Factory Setting	20 Hz
Valid Entries	20 Hz, 25 Hz.
Inspect	No
Copy Option	No
Console Procedure	Options→**More**→Ringing Freq→dial slot no.→Select 20Hz or 25Hz→Enter→Exit
PC Procedure	F7→PgUp→F8→type slot no.→F1 or F2→F10→F5

Procedure: Ringing Frequency

	Console Display/Instructions	Additional Information	PC
1	**Select the Options menu.**		
	System Programming: > Make a selection System Extensions SysRenumber Options Operator Tables LinesTrunks AuxEquip Exit NightSrvce		F7
2	**Go to the second screen of the Options menu.**		
	Options: > Make a selection Transfer Callback CampOn Ext Status CallParkRtn SMDR Delay Ring InsideDial Exit ReminderSrv	Press **More**.	PgUp
3	**Select Ringing Frequency.**		
	Options: > Make a selection Unassigned Cover Delay BehndSwitch Inter-Digit RecallTimer Ringing Freq Rotary SecDT Timer Exit		F4
4	**Enter the slot number of the 016 module.**		
	Ringing Frequency Enter slot number (1-17) xx Delete Backspace Exit Enter	Dial or type [xx]	

	Console Display/Instructions	Additional Information	PC
5	**Specify 20 Hz or 25 Hz.**		

	`Ringing Freq: Slot xx:`
	`Select one`
	`20Hz`
	`25Hz`
	
	`Exit Enter`
		xx = slot number entered in Step 4.	

		Select **20Hz** or **25Hz**.	F1 F2
6	**Save your entry.**		
	Select **Enter**.		F10
7	**Return to the System Programming menu.**		
	Select **Exit**.		F5

Second Dial Tone Timer

Use this procedure to program the second dial tone timer. The second dial tone timer sets a delay in providing a dial tone after a star code is dialed to obtain special services from the central office. See the *Feature Reference* guide for information about programming the second dial tone timer to prevent toll fraud. The second dial tone timer is available only in Release 3.1 and later.

Summary: Second Dial Tone Timer

Programmable by	System manager
Mode	All
Idle Condition	Not required
Planning Form	Form 8a, System Features
Factory Setting	0 ms.
Valid Entries	0–5000 ms, increments of 200 ms.
Inspect	No
Copy Option	No
Console Procedure	**Options**→**More**→**SecDT**→**Drop**→dial second dial tone timer value→**Enter**→**Exit**
PC Procedure	F7→PgUp→F9→Alt+P→type second dial tone timer value→F10→F5

Procedure: Second Dial Tone Timer

	Console Display/Instructions	Additional Information	PC
1	**Select the Options menu.**		
	System Programming: > Make a selection System Extensions SysRenumber Options Operator Tables LinesTrunks AuxEquip Exit NightSrvce		F7
2	**Go to the second screen of the Options menu.**		
	Options: > Make a selection Transfer Callback CampOn Ext Status CallParkRtn SMDR Delay Ring InsideDial Exit ReminderSrv	Press **More**.	PgUp
3	**Select Ringing Frequency.**		
	Options: > Make a selection Unassigned Cover Delay BehndSwitch Inter-Digit RecallTimer Ringing Freq Rotary SecTD Timer Exit		F9
4	**Erase the current second dial tone timer.**		
	Second Dialtone Timer: Enter timeout (0-5000 ms, increments 200) xxxx Backspace Exit Enter	Press Drop or Backspace	Alt + P F4
5	**Enter the second dial tone timer (*nnnn* = 0 to 5000 ms, in increments of 200 ms).**		
		Dial or type [*nnnn*].	↵
6	**Save your entry.**		
	Select Enter.		F10
7	**Return to the System Programming menu.**		
	Select Exit.		F5

Disconnect Signaling Reliability

Use this procedure to classify the disconnect signal sent by the central office on loop-start trunks as one of the following:

- **Reliable.** Signal sent within a short time.
- **Unreliable.** Signal may not be provided.

Security Alert:
Toll fraud can occur if you have loop-start trunks with unreliable disconnect. In this situation, if someone calls you and you hang up, the CO could send dial tone before the caller hangs up, allowing the caller to place another call as if it originated at your company.

The setting selected applies to all trunks in the system because trunks cannot be programmed individually. The reliable/unreliable setting does not apply to loop-start trunks emulated on a T1 facility. If you specify a reliable disconnect for trunks programmed with a short hold disconnect interval (see "Hold Disconnect Interval"), active calls as well as trunks on hold may be disconnected. For more information about reliable and unreliable disconnect and its implications, see the *Feature Reference*.

NOTE:
Certain features (Remote Call Forwarding and Transfer to outside numbers) and applications (CMS, AUDIX Voice Power, and MERLIN MAIL) are not recommended with loop-start trunks. See "Hold Disconnect Interval."

Summary: Disconnect Signaling Reliability

Programmable by	System manager, Integrated Administration
Mode	All
Idle Condition	Not required
Planning Form	Form 2c, System Numbering: Line/Trunk Jacks
Factory Setting	Unreliable
Valid Entries	Unreliable, Reliable
Inspect	No
Copy Option	No
Console Procedure	LinesTrunks→TT/LS Disc→LS Disconnect→Yes or No→Enter→Exit→Exit
PC Procedure	F4 → F3 → F2 → F1 or F2 → F10 → F5 → F5

Procedure: Disconnect Signaling Reliability

	Console Display/Instructions	Additional Information	PC
1	**Select the Lines and Trunks menu.**		
	System Programming: > Make a Selection System Extensions SysRenumber Options Operator Tables LinesTrunks AuxEquip Exit NightSrvce		F4
2	**Select Touch-Tone/Loop-Start Disconnect.**		
	Lines and Trunks: > Make a selection LS/GS/DSL PRI TIE Lines Copy TT/LS Disc RemoteAccss DID Pools Exit Toll Type		F3
3	**Select Loop-Start Disconnect.**		
	TouchTone/LS Disconnect: Make a selection Outmode LS Disconnect Exit		F2
4	**Specify the disconnect signal as reliable or unreliable.**		
	LS Reliable Disconnect: Select one Yes No Exit Enter	Select **Yes** or **No**.	F1 F2
5	**Save your entry.**		
	Select **Enter**.		F10
6	**Return to the System Programming menu.**		
	Select **Exit** two times.		F5 F5

Toll Type

Use this procedure to specify whether users have to dial a toll prefix (1 or 0) before dialing an area code and telephone number. (Your local telephone company should verify toll prefix requirements for each line/trunk.)

This setting is used by the system to classify calls as local or long distance so that appropriate toll restrictions can be applied.

NOTE:
This option applies only to loop- and ground-start trunks; it does not apply to tie trunks or DID trunks.

Summary: Toll Type

Programmable by	System manager
Mode	All
Idle Condition	Not required
Planning Form	Form 2c, System Numbering: Line/Trunk Jacks
Factory Setting	Toll prefix required
Valid Entries	Required, Not required
Inspect	No
Copy Option	Yes

Console Procedure	To program a single line/trunk:
	`LinesTrunks`→`Toll Type`→Select entry mode→Dial no. of the line/trunk→`Enter`→`Exit`→`Exit`→`Exit`
	To program a block of lines/trunks:
	`LinesTrunks`→`Toll Type`→Select block of lines/trunks→Toggle LED On/Off→`Enter`→`Exit`→`Exit`→`Exit`

PC Procedure	To program a single line/trunk: [F4]→[F10]→[F6]→Type no. of the line/trunk→[F10]→[F5]→[F5]→[F5] To program a block of lines/trunks: [F4]→[F10]→Select block of lines/trunk→Toggle letter `G` On/Off→[F10]→[F5]→[F5]→[F5]

Procedure: Toll Type

	Console Display/Instructions	Additional Information	PC
1	**Select the Lines and Trunks menu.**		
	System Programming: > Make a selection System Extensions SysRenumber Options Operator Tables LinesTrunks AuxEquip Exit NightSrvce		F4
2	**Select Toll Type.**		
	Lines and Trunks: > Make a selection LS/GS/DSL PRI TIE Lines Copy TT/LS Disc RemoteAccss DID Pools Exit Toll Type		F10
3	**Specify the toll type line(s).**	● ◆	
	Toll Type: Enter toll prefix lines Lines 01-20 Entry Mode Lines 21-40 Lines 41-60 Lines 61-80 Exit	For a single line, go to ● Single Line Procedure. For a block of lines, go to ◆ Block Procedure.	

● Single Line Procedure

1	**Specify entry mode.**	
	Select **Entry Mode**.	F6
2	**Enter the number of the line/trunk that requires a toll prefix (1 or 0) before the area code.**	
	Toll: Enter toll prefix lines Delete Backspace Exit Enter Dial or type [*nn*].	

	Console Display/Instructions	Additional Information	PC
3	**Assign or remove the toll prefix requirement from the line/trunk.**		
	Select **Enter** or		F10
	Delete.		F8
		You may continue to assign or remove the toll prefix requirement from additional lines/trunks by repeating Steps 2 and 3.	
4	**Return to the System Programming menu.**		
	Select **Exit** three times.		F5 F5 F5

◆ Block Procedure

1	**Specify the block of 20 lines associated with 20 buttons on the system programming console.**		
	Select **Lines 01-20**		F1
	Lines 21-40		F2
	Lines 41-60		F3
	Lines 61-80.		F4
2	**Specify whether or not a toll prefix is needed.**		
		Toggle the green LED on or off as required. On = toll prefix needed. Off = toll prefix not needed.	
3	**Return to the System Programming menu.**		
	Select **Exit** three times.		F5 F5 F5

Hold Disconnect Interval

Use this procedure to specify the number of milliseconds before a loop-start line/trunk is released when a caller on hold hangs up and abandons the call. This can be specified as either a long interval (450 ms) or a short interval (50 ms). The hold disconnect interval applies to loop-start trunks connected to 400, 408, or 800 modules; it does not apply to emulated loop-start trunks (T1 facility).

NOTES:

1. If the disconnect interval is longer than the telephone company setting, the line is not released when a caller on hold hangs up.
2. Do not program a short interval unless the local telephone company's central office is the crossbar type.
3. Do not program a reliable disconnect for lines/trunks with a short hold disconnect interval. This can cause active calls as well as the lines/trunks on hold to be disconnected. See "Disconnect Signaling Reliability."

For more information on Hold Interval Disconnect and Reliable and Unreliable Disconnect, see the *Feature Reference*.

Summary: Hold Disconnect Interval

Programmable by	System manager
Mode	All
Idle Condition	Not required
Planning Form	Form 2c, System Numbering: Line/Trunk Jacks
Factory Setting	Long interval (450 ms)
Valid Entries	Long interval, Short interval
Inspect	No
Copy Option	No

Console Procedure	To program a single line/trunk:
	`LinesTrunks`→**More**→`HoldDiscnct`→Select entry mode →Dial no. of the line/trunk→`Enter`→`Exit`→`Exit`
	To program a block of lines/trunks:
	`LinesTrunks`→**More**→`HoldDiscnct`→Select block of lines/trunks→Toggle LED On/Off→`Enter`→`Exit`→`Exit`

PC Procedure	To program a single line/trunk: F4→PgUp→F1→F6→Type no. of the line/trunk→F10→F5→F5 To program a block of lines/trunks: F4→PgUp→F1→Select block of lines/trunks→Toggle letter `G` On/Off→F10→F5→F5

Procedure: Hold Disconnect Interval

Console Display/Instructions	Additional Information	PC
1 Select the Lines and Trunks menu.		

`System Programming: >`
`Make a selection`
`System Extensions`
`SysRenumber Options`
`Operator Tables`
`LinesTrunks AuxEquip`
`Exit NightSrvce`
		F4

Console Display/Instructions	Additional Information	PC
2 Go to the second screen of the Lines and Trunks menu.		

`Lines and Trunks: >`
`Make a selection`
`LS/GS/DSL  PRI`
`TIE Lines  Copy`
`TT/LS Disc  RemoteAccss`
`DID  Pools`
`Exit  Toll Type`
	Press **More**.	PgUp

3 Select Hold Disconnect Interval.		

`Lines and Trunks: >`
`Make a selection`
`HoldDiscnct  LS-ID Delay`
`PrncipalUsr  ClockSync`
`QCC Prior  BRI`
`QCC Oper  T1 Data NW`
`Exit`
		F1

4 Specify the hold disconnect line(s).	● ◆	

`Hold Disconnect:`
`Lines w/long interval`
`Lines 01-20  Entry Mode`
`Lines 21-40`
`Lines 41-60`
`Lines 61-80`
`Exit`
	For a single line, go to
	● Single Line Procedure.
	
	For a block of lines, go to
	◆ Block Procedure.	

● Single Line Procedure

1 Specify entry mode.		
Select **Entry Mode**.		F6
2 Enter the number of the line or trunk with a long disconnect interval.		

`Hold Disconnect:`
`Enter lines/trunks with`
`long interval`
 	
`Delete`
`Backspace`
`Exit  Enter`
	Dial or type [*nnn*].	↵

	Console Display/Instructions	Additional Information	PC
3	**Assign or remove the line/trunk.**		
	Select **Enter** or		F10
	Delete.		F8
		You may continue to assign or remove a long disconnect interval from additional lines/trunks by repeating Steps 2 and 3.	
4	**Return to the System Programming menu.**		
	Select **Exit**.		F5 F5 F5

◆ Block Procedure

1	**Specify the block of 20 lines associated with 20 buttons on the system programming console.**		
	Select **Lines 01-20**		F1
	Lines 21-40		F2
	Lines 41-60		F3
	Lines 61-80.		F4
2	**Specify touch-tone or rotary signaling for each block.**		
		Toggle the green LED on or off as required. On = long hold disconnect interval. Off = short hold disconnect interval.	
3	**Return to the System Programming menu.**		
	Select **Exit**.		F5 F5 F5

Principal User for Personal Line

Use this procedure to assign or remove one telephone as principal user for a personal line. When a telephone with Remote Call Forwarding activated is assigned as principal user, calls received on the personal line are forwarded to an outside telephone number. In addition, calls received on that line are sent to that telephone's individual and/or Group Coverage receivers unless the personal line button is set to No Ring.

The principal user assignment must be removed before the trunk can be removed from a button on the telephone.

When no principal user is assigned for a personal line, calls received on the personal line are not forwarded to outside telephone numbers; calls received on the personal line follow the coverage patterns for all users who share the line.

Summary: Principal User for Personal Line

Programmable by	System manager
Mode	All
Idle Condition	Not required
Planning Form	Form 4b, Analog Multiline Telephone Form 4d, MLX Telephone Form 4e, MFM Adjunct: MLX telephone Form 4f, Tip/Ring Equipment Form 5a, Direct-Line Console (DLC): Analog Form 5b, Direct-Line Console (DLC): Digital Form 5c, MFM Adjunct: DLC
Factory Setting	No principal user
Valid Entries	Not applicable
Inspect	No
Copy Option	No
Console Procedure	`LinesTrunks`→**More**→`PrncipalUsr`→Dial line/trunk no.→`Enter`→Dial ext. no.→`Enter`→`Exit`→`Exit`
PC Procedure	F4→PgUp→F2→Type line/trunk no.→F10→Type ext.

Procedure: Principal User for Personal Line

	Console Display/Instructions	Additional Information	PC
1	**Select the Lines and Trunks menu.**		

	`System Programming: >`
	`Make a selection`
	`System  Extensions`
	`SysRenumber  Options`
	`Operator  Tables`
	`LinesTrunks  AuxEquip`
	`Exit  NightSrvce`
			F4

2	**Go to the second screen of the Lines and Trunks menu.**		

	`Lines and Trunks: >`
	`Make a selection`
	`LS/GS/DSL  PRI`
	`TIE Lines  Copy`
	`TT/LS Disc  RemoteAccss`
	`DID  Pools`
	`Exit  Toll Type`
		Press **More**.	PgUp

	Console Display/Instructions	Additional Information	PC
3	**Select Principal User.**		

	`Lines and Trunks: >`
	`Make a selection`
	`HoldDiscnct  LS-ID Delay`
	`PrncipalUsr  ClockSync`
	`QCC Prior  BRI`
	`QCC Oper  T1 Data NW`
	`Exit`
			F2

4	**Enter the line or trunk number to which you are assigning a principal user.**		

	`Principal User:`
	`Enter line/trunk number`
	
	`Exit  Enter`
		Dial or type:
		Trunk number [*nnn*]
		Slot and port number ✱[*sspp*]
		Logical ID number #[*nnn*].	

5	**Save your entry.**		
	Select **Enter**.		F10
6	**Enter the extension assigned as principal user for the specified line.**		

	`Line/Trunk xxx:`
	`Enter principal ext for`
	`Remote Forward/Coverage`
	
	`  Delete`
	`Backspace  Next`
	`Exit  Enter`
		xxx = line/trunk number entered in Step 4
		
		SP: “Entering an Extension”	

7	**Assign or remove the extension as principal user.**		
	Select **Enter** or **Delete**.		F10 F8
8	**Continue to assign a principal user to another line or trunk, or go to Step 9.**		
	Select **Next**.	Return to Step 6. The next line/trunk will be displayed on Line 1.	F9
9	**Save your entry.**		
	Select **Enter**.		F10
10	**Return to the System Programming menu.**		
	Select **Exit** two times.		F5 F5

QCC Queue Priority Level

Use this procedure to assign QCC queue priority level values (1 to 7) to each loop-start, ground-start, and automatic-in tie trunk in your system. The value assigned determines the order in which calls are sent to the QCC operator positions. Call priority 1 is the highest priority, and 7 is the lowest priority.

NOTE:
This procedure applies to Hybrid/PBX mode only in a system that includes QCC operator positions.

Summary: QCC Queue Priority Level

Programmable by	System manager
Mode	Hybrid/PBX
Idle Condition	Not required
Planning Form	Form 2c, System Numbering: Line/Trunk Jacks
Factory Setting	4
Valid Entries	1 to 7
Inspect	Yes
Copy Option	No

Console Procedure	To program a single line/trunk:
	`LinesTrunks`→**More**→`QCC Prior`→Dial priority level→`Enter`→Select entry mode→Dial trunk no.→`Enter`→`Exit`→`Exit`
	To program a block of lines/trunks:
	`LinesTrunks`→**More**→`QCC Prior`→Dial priority level→`Enter`→Select block of lines→Toggle LED On/Off→`Enter`→`Exit`→`Exit`

PC Procedure	To program a single line/trunk: [F4]→[PgUp]→[F3]→Type priority level→Select entry mode→Type trunk no.→[F10]→[F5]→[F5] To program a block of lines/trunks: [F4]→[PgUp]→[F3]→Type priority level→[F10]→Select block of lines→Toggle letter `G` On/Off→[F10]→[F5]→[F5]

Procedure: QCC Queue Priority Level

	Console Display/Instructions	Additional Information	PC
1	**Select the Lines and Trunks menu.**		
	System Programming: > Make a selection System Extensions SysRenumber Options Operator Tables LinesTrunks AuxEquip Exit NightSrvce		F4
2	**Go to the second screen of the Lines and Trunks menu.**		
	Lines and Trunks: > Make a selection LS/GS/DSL PRI TIE Lines Copy TT/LS Disc RemoteAccss DID Pools Exit Toll Type	Press **More**.	PgUp
3	**Select QCC Queue Priority.**		
	Lines and Trunks: > Make a selection HoldDiscnct LS-ID Delay PrncipalUsr ClockSync QCC Prior BRI QCC Oper T1 Data NW Exit		F3
4	**Enter the QCC priority level (*n* = 1 to 7).**		
	QCC Priority: Enter queue priority (1-7) Backspace Exit Enter	Dial or type [*n*].	
5	**Save your entry.**		
	Select **Enter**.		F10

	Console Display/Instructions	Additional Information	PC
6	**Specify the QCC priority lines.**	● ◆	
	QCC Priority *xx* Enter line/trunk number Lines 01-20 Entry Mode Lines 21-40 Lines 41-60 Lines 61-80 Exit	*x* = QCC queue priority entered in Step 4 For a single line, go to ● Single Line Procedure. For a block of lines, go to ◆ Block Procedure.	

● Single Line Procedure

1	**Specify entry mode.**		
	Select **Entry Mode**.		F6
2	**Enter the line or trunk with the specified queue priority.**		
	QCC Priority *x*: Enter line/trunk number Delete Backspace Next Exit Enter	Dial or type: Trunk number [*nnn*] Slot and port number *[*sspp*] Logical ID number #[*nnn*].	↵
3	**Assign or remove the line/trunk from the specified QCC priority level.**		
	Select **Enter** or **Delete**.	You may continue to assign or remove the QCC priority level from additional lines/trunks by repeating Steps 2 and 3.	F10 F8
4	**Continue to assign or remove lines or trunks, or go to Step 5.**		
	Select **Next**.	Return to Step 2. The next QCC priority level will be displayed on Line 1.	F9
5	**Save your entry.**		
	Select **Enter**.		F10
6	**Return to the System Programming menu.**		
	Select **Exit** two times.		F5 F5

◆ Block Procedure

	Console Display/Instructions	Additional Information	PC
1	**Specify the block of 20 lines associated with the 20 line buttons on the system programming console.**		
	Select `Lines 01-20`		F1
	`Lines 21-40`		F2
	`Lines 41-60`		F3
	`Lines 61-80`.		F4
2	**Assign the queue priority specified.**		
		Toggle the green LED on or off as required. On = to assign the queue priority. Off = not to assign the queue priority.	
3	**Return to the System Programming menu.**		
	Select `Exit` two times.		F5 F5

QCC Operator to Receive Calls

Use this procedure to specify whether or not incoming calls on each line/trunk ring into the QCC queue, and to identify the QCC system operator positions that receive incoming calls on each line/trunk.

NOTES:

1. This procedure applies to Hybrid/PBX mode only in a system that includes QCC operator positions.
2. Each ground-start, loop-start, or automatic-in tie trunk programmed to ring into the QCC queue can be associated with one or more QCC operator positions.
3. If a trunk assigned to ring into the QCC queue is also used for shared remote access, see “Remote Access Trunk Assignment.” You must assign remote access before you assign a QCC system operator to receive calls (see “QCC Operator to Receive Call Types”).
4. Do not change the factory setting of No QCC Operator Assigned to Receive Calls for trunks dedicated to incoming calls for calling groups, trunks used as personal lines, DID trunks, unequipped DS1 trunks, or dial-in tie trunks.

Summary: QCC Operator to Receive Calls

Programmable by	System manager
Mode	Hybrid/PBX
Idle Condition	Not required
Planning Form	Form 2c, System Numbering: Line/Trunk Jacks
Factory Setting	No QCC operator is assigned to receive calls.
Valid Entries	Extension number of first or fifth extension jack
Inspect	Yes
Copy Option	No
Console Procedure	To program a single line/trunk: LinesTrunks→**More**→QCC Oper→Dial ext. no.→Enter→ Select entry mode→Dial line/trunk no.→Enter→Enter→ Enter To program a block of lines/trunks: LinesTrunks→**More**→QCC Oper→Dial ext. no.→Enter→ Select block of lines/trunks→Toggle LED On/Off→Enter →Exit→Exit
PC Procedure	To program a single line/trunk: F4 →PgUp→F4 →Type ext. no.→F10→F6 →Type line/trunk no.→F10→F5 →F5 To program a block of lines/trunks: F4 →PgUp→F4 →Type ext. no.→F10→ Select block of lines/trunks→Toggle letter G On/Off→F10→F5 →F5

Procedure: QCC Operator to Receive Calls

Console Display/Instructions	Additional Information	PC
1 Select the Lines and Trunks menu.		
System Programming: > Make a selection System Extensions SysRenumber Options Operator Tables LinesTrunks AuxEquip Exit NightSrvce		F4
2 Go to the second screen of the Lines and Trunks menu.		
Lines and Trunks: > Make a selection LS/GS/DSL PRI TIE Lines Copy TT/LS Disc RemoteAccss DID Pools		

Console Display/Instructions	Additional Information	PC
`Exit  Toll Type`	Press **More**.	PgUp

3 Select QCC Operator.

Console Display/Instructions	Additional Information	PC

`Lines and Trunks: >`
`Make a selection`
`HoldDiscnct`
`PrncipalUsr`
`QCC Prior`
`QCC Oper`
`Exit`
		F4

4 Specify the QCC operator extension.

Console Display/Instructions	Additional Information	PC

`QCC Operator:`
`Enter QCC operator`
`extension number`
 	
`Backspace`
`Exit  Enter`
	If no DSS is attached:
	SP: "Entering an Extension"
	
	If DSS is attached:
	Toggle the red LED on or off as required. Go to Step 6.
	On = operator receiving calls.
	Off = operator not receiving calls.	

5 Save your entry.

Console Display/Instructions	Additional Information	PC
Select **Enter**.		F10

6 Specify the line(s) associated with the QCC operator. ● ◆

Console Display/Instructions	Additional Information	PC

`QCC Operator xxxx:`
`Enter line/trunk number`
`Lines 01-20  Entry Mode`
`Lines 21-40`
`Lines 41-60`
`Lines 61-80`
`Exit`
	xxxx = extension number entered in Step 4
	
	For a single line/trunk, go to ● Single Line Procedure.
	
	For a block of lines/trunks, go to ◆ Block Procedure.	

● Single Line Procedure

1 Specify entry mode.

Console Display/Instructions	Additional Information	PC
Select **Entry Mode**.		F6

2 Enter the line/trunk assigned to ring into the QCC queue.

Console Display/Instructions	Additional Information	PC

`QCC Operator xxxx:`
`Enter line/trunk number`
 	
`Delete`
`Backspace  Next`
`Exit  Enter`
	xxxx = extension number entered in Step 4
	
	Dial or type:
	Trunk number [*nnn*]
	Slot and port number ✱[*sspp*]
	Logical ID number #[*nnn*].	

	Console Display/Instructions	Additional Information	PC
3	**Assign or remove the line/trunk from the specified QCC operator.**		
	Select Enter or		F10
	Delete.		F8
		You may continue to assign or remove additional lines/trunks from the QCC operator by repeating Steps 2 and 3.	
4	**Continue to assign line/trunk to another QCC operator or go to Step 5.**		
	Select Next.		F9
		Return to Step 2. The next QCC operator will be displayed on Line 1.	
5	**Return to the System Programming menu.**		
	Select Exit two times.		F5 F5

◆ Block Procedure

1	**Specify the block of 20 lines associated with the 20 line buttons on the system programming console.**		
	Select Lines 01-20		F1
	Lines 21-40		F2
	Lines 41-60		F3
	Lines 61-80.		F4
2	**Assign or remove the lines for the specified QCC operator.**		
		Toggle the green LED on or off as required. On = operator receiving calls. Off = operator not receiving calls.	
3	**Return to the System Programming menu.**		
	Select Exit two times.		F5 F5

Loop-Start Identification Delay

Use this procedure to delay the alerting (ringing) of calls arriving on loop-start lines/trunks connected to an 800 GS/LS-ID module to all extensions until approximately six seconds have elapsed since the port module informed the system software that the line was ringing, or the system software has been informed that Caller ID information is available, whichever comes first.

This option can be programmed on a per trunk basis. It gives the appearance to the users that the Caller-ID information is available the moment the call arrives at the extension, and prevents applications or adjuncts from answering the call too soon.

The LS-ID Delay setting appears on the Ground-Start/Loop-Start Trunk Information report.

Any extension or adjunct that answers an incoming CO line on the first ring causes the Caller ID information associated with the call to be lost. The adjunct must be programmed to either answer the call on the second (or later) ring, or the call must be delayed. The call can be delayed by setting the ring option on the buttons associated with the adjunct or by using the LS-ID Delay option.

NOTE:
Caller-ID information is not available on ground-start lines/trunks.

Summary: Loop-Start Identification Delay

Programmable by	System manager
Mode	All
Idle Condition	Not required
Planning Form	Form 2c, System Numbering: Line/Trunk Jacks
Factory Setting	No delay
Valid Entries	Loop-start line/trunk numbers
Inspect	Yes
Copy Option	Yes, but only to the same trunk type

Console Procedure	To program a single line/trunk:
	`LinesTrunks`→**More**→`LS-ID Delay`→Select entry mode →Dial no. of the line/trunk→`Enter`→`Exit`→`Exit`
	To program a block of lines/trunks:
	`LinesTrunks`→**More**→`LS-ID Delay`→Select block of lines/trunks→Toggle LED On/Off→`Enter`→`Exit`→`Exit`

PC Procedure	To program a single line/trunk: [F4]→[PgUp]→[F6]→[F6]→Type no. of the line/trunk→[F10] →[F5]→[F5] To program a block of lines/trunks: [F4]→[PgUp]→[F6]→Select block of lines/trunks→Toggle letter `G` On/Off→[F10]→[F5]→[F5]

Procedure: Loop-Start Identification Delay

Console Display/Instructions	Additional Information	PC
1 Select the Lines and Trunks menu.		
System Programming: > Make a selection System Extensions SysRenumber Options Operator Tables LinesTrunks AuxEquip Exit NightSrvce		F4
2 Go to the second screen of the Lines and Trunks menu.		
Lines and Trunks: > Make a selection LS/GS/DSL PRI TIE Lines Copy TT/LS Disc RemoteAccss DID Pools Exit Toll Type	Press **More**.	PgUp
3 Select Loop-Start Identification Delay.		
Lines and Trunks: > Make a selection HoldDiscnct LS-ID Delay PrncipalUsr ClockSync QCC Prior BRI QCC Oper T1 Data NW Exit		F5
4 Specify the line(s) for LS-ID Delay.	●◆	
LS-ID Delay : Enter Trks w/LS-ID Delay Lines 01-20 Entry Mode Lines 21-40 Lines 41-60 Lines 61-80 Exit	For a single line/trunk go to ● Single Line Procedure. For a block of lines/trunks go to ◆ Block Procedure.	

● Single Line Procedure

	Console Display/Instructions	Additional Information	PC
1	**Specify entry mode.**		
	Select **Entry Mode**.		F6
2	**Enter the line/trunk number for LS-ID Delay.**		
	LS-ID Delay: Enter Trunk Number for Alert Delay Delete Backspace Exit Enter	Dial or type: Trunk number [*nnn*] Slot and port number ✱[*sspp*] Logical ID number #[*nnn*].	⇐
3	**Assign or remove the LS-ID Delay.**		
	Select **Enter** or **Delete**.		F10 F8
		You may continue to assign or remove the LS-ID delay from additional lines/trunks by repeating Steps 2 and 3.	
4	**Return to the System Programming menu.**		
	Select **Exit** two times.		F5 F5

◆ Block Procedure

1	**Specify the block of 20 lines associated with the 20 line buttons on the system programming console.**		
	Select **Lines 01-20** **Lines 21-40** **Lines 41-60** **Lines 61-80**.		F1 F2 F3 F4
2	**Assign the LS-ID Delay to the appropriate lines/trunks.**		
		Toggle the green LED on or off as required. On = assign the LS-ID Delay Off = remove the LS-ID Delay	
3	**Return to the System Programming menu.**		
	Select **Exit** two times.		F5 F5

Clock Synchronization

Use this procedure to specify the primary, secondary, and tertiary clock source. A clock source may be a 100D module or a port on an 800 NI-BRI module. See *Feature Reference* for more information about the appropriate setting. If the clock is taken from a 100D module, you can also specify whether the clock is synchronized to the external endpoint (loop) or to the clock reference source (local).

NOTE:
This procedure is necessary only if your system includes an 800 NI-BRI module or more than one 100D module.

Summary: Clock Synchronization

Programmable by	System manager
Mode	All
Idle Condition	Not required
Planning Form	Form 3b, Incoming Trunks: DS1 Connectivity 100D module Form 3i, Incoming Trunks: BRI Options
Factory Setting	Primary clock: the first 100D module in the control unit carrier;
Valid Entries	Primary, Secondary, Tertiary, Loop/Local
Inspect	No
Copy Option	No
Console Procedure	`LinesTrunks`→**More**→`ClockSync`→`Primary`→Dial slot no.→`Enter`→Dial port no. **OR** Select source of synchronization→`Enter`→`Secondary`→Dial slot no.→`Enter`→Dial port no. **OR** Select source of synchronization→`Enter`→`Tertiary`→dial slot no.→`Enter`→Dial port no. **OR** Select source of synchronization→`Enter`→`Exit`→`Exit`
PC Procedure	[F4]→[PgUp]→[F7]→[F1]→Type slot no.→[F10]→Type port no. **OR** Select source of synchronization→[F10]→[F2]→Type slot no.→[F10]→Type port no. **OR** Select source of synchronization→[F10]→[F3]→Type slot no.→[F10]→Type port no. **OR** Select source of synchronization→[F10]→[F5]→[F5]

Procedure: Clock Synchronization

	Console Display/Instructions	Additional Information	PC
1	**Select the Lines and Trunks menu.**		
	System Programming: > Make a selection System Extensions SysRenumber Options Operator Tables LinesTrunks AuxEquip Exit NightSrvce		F4
2	**Go to the second screen of the Lines and Trunks menu.**		
	Lines and Trunks: > Make a selection LS/GS/DS1 PRI TIE Lines Copy TT/LS Disc RemoteAccss DID Pools Exit Toll Type	Press **More**.	PgUp
3	**Select Clock Synchronization.**		
	Lines and Trunks: > Make a selection HoldDiscnct LS-ID Delay PrncipalUsr ClockSync QCC Prior BRI QCC Oper T1 Data NW Exit		F7
4	**Select Primary.**		
	Clock Syncronization: Make a selection Primary Secondary Tertiary Exit		F1
5	**Enter the slot number of the module to contain the primary system clock.**		
	Primary System Clock Enter slot number (1-17) xx Delete Backspace Exit Enter	Dial or type [xx]	

	Console Display/Instructions	Additional Information	PC
6	**Save your entry.**		
	Select **Enter**.		F10
		If the slot selected in Step 5 contains a 100D module, continue with Step 7. If the slot selected in Step 5 contains an 800 NI-BRI, go to Step 8.	
7	**Specify whether the clock is to be synchronized to an external endpoint (loop) or is to be free running (local), then go to Step 9.**		

	`Primry ClkSource Slot xx:`
	`Select one`
	`Loop`
	`Local`
	
	`Exit  Enter`
		xx = slot number entered in Step x
		
		Select **Loop** or **Local**.
			F1
			F2

8	**Select the 800 NI-BRI module port to be the primary clock source.**		

	`Primary Loop Clk Slot xx:`
	`Enter port number (1-8)`
	
	`x`
	
	`Backspace`
	`Exit  Enter`
		Dial or type [x].	

9	**Save your entry.**		
	Select **Enter**.		F10
10	**Select Secondary.**		

	`Clock Syncronization:`
	`Make a selection`
	`Primary`
	`Secondary`
	`Tertiary`
	
	`Exit`
			F2

11	**Enter the slot number of the module to contain the secondary system clock.**		

	`Secondary System Clock`
	`Enter slot number (1-17)`
	
	`xx`
	`Delete`
	`Backspace`
	`Exit  Enter`
		Dial or type [xx].	

	Console Display/Instructions	Additional Information	PC
12	**Save your entry.**		
	Select **Enter**.		F10
		If the slot selected in Step 11 contains a 100D module, continue with Step 13. If the slot selected in Step 11 contains an 800 NI-BRI, go to Step 14.	
13	**Specify whether the clock is to be synchronized to an external endpoint (loop) or is to be free running (local), then go to Step 15.**		
	SecondaryClkSource Slot*xx*: Select one Loop Local Exit Enter	*xx* = slot number entered in Step x	
		Select **Loop** or **Local**.	F1 F2
14	**Select the 800 NI-BRI module port to be the secondary clock source.**		
	Secondary Loop ClkSlot xx: Enter port number (1-8) x Backspace Exit Enter	Dial or type [x].	
15	**Save your entry.**		
	Select **Enter**.		F10
16	**Select Tertiary.**		
	Clock Syncronization: Make a selection Primary Secondary Tertiary Exit		F3
17	**Enter the slot number of the module to contain the tertiary system clock.**		
	Tertiary System Clock Enter slot number (1-17) xx Delete Backspace Exit Enter	Dial or type [xx]	

	Console Display/Instructions	Additional Information	PC
18	**Save your entry.**		
	Select **Enter**.		F10
		If the slot selected in Step 17 contains a 100D module, continue with Step 19. If the slot selected in Step 17 contains an 800 NI-BRI, go to Step 20.	
19	**Specify whether the clock is to be synchronized to an external endpoint (loop) or is to be free running (local), then go to Step 21.**		

	`Tertry ClkSource Slot xx:`
	`Select one`
	`Loop`
	`Local`
	
	`Exit  Enter`
		xx = slot number entered in Step x
		
		Select **Loop** or **Local**.
			F1
			F2

20	**Select the port on the 800 NI-BRI module to be the tertiary clock source.**		

	`Tertiary LoopClk Slot xx:`
	`Enter port number (1-8)`
	
	`x`
	
	`Backspace`
	`Exit  Enter`
		Dial or type [x].	

12	**Save your entry.**		
	Select **Enter**.		F10
22	**Return to the System Programming menu.**		
	Select **Exit** two times.		F5 F5

Trunks to Pools Assignment

Use this procedure to create trunk pools (groups of outside lines/trunks connected to the system). Trunk pools are used to specify preferred routes for Automatic Route Selection (ARS). In addition, trunk pools enable users to select a line/trunk by dialing a pool dial-out code or by pressing a single button on the telephone. (A separate button for each line/trunk is not needed.) Each pool should contain trunks of the same type (for example, loop- or ground-start or WATS); however, ground- and loop-start trunks of the same type can be included in the same pool. Ground-start trunks must be manually assigned. A maximum of 11 trunk pools is allowed. A trunk can be assigned to only one pool.

Do not mix different service areas of WATS (Wide Area Telecommunications Service) trunks or FX (Foreign Exchange) lines to different cities. Do not include both incoming only and outgoing only lines/trunks in a pool.

If you want to reassign a line/trunk to a different pool, you must remove it from the current pool before you assign it to the new pool. Once you assign a line/trunk to a pool, it can be assigned to a button only on a direct-line console operator position; individual lines intended for personal use on telephones other than the DLC console should not be assigned to pools.

DID trunks cannot be grouped in pools. Loop-start are automatically placed in pools and must be removed manually if used for paging loudspeakers, Music on Hold, or maintenance alarms.

Dial-in tie trunks should not be grouped in pools if you intend to assign **Pool** buttons on telephones.

If you are using Automatic Route Selection, the main pool (factory-set dial-out code 70) must contain loop- or ground-start trunks.

The system provides an error tone when a line/trunk is in use or if a loudspeaker paging system, Music on Hold, or maintenance alarm is already assigned; however, the system does not indicate the reason for the error tone.

NOTE:
This procedure applies to Hybrid/PBX mode only.

Summary: Trunks to Pools Assignment

Programmable by	System manager
Mode	Hybrid/PBX
Idle Condition	Trunk idle
Planning Form	Form 2c, System Numbering: Line/Trunk Jacks
Factory Setting	All loop-start trunks are assigned to the main trunk pool (factory-set extension number 70); all tie trunks are assigned to the trunk pool with the factory-set extension number 891; no factory-set extensions numbers are assigned to ground-start trunks.
Valid Entries	Line numbers
Inspect	Yes
Copy Option	Yes
Console Procedure	To program a single line/trunk: `LinesTrunks`→`Pools`→Dial pool dial-out code→Select entry mode→Dial no. of the line/trunk→`Enter`→`Exit`→`Exit`

To program a block of lines/trunks:
LinesTrunks→Pools→Dial pool dial-out code→Select block of lines/trunks→Toggle LED On/Off→Enter→Exit →Exit

PC Procedure

To program a single line/trunk:
F4 →F9 →Type pool dial-out code→F10 →F6 →Type no. of the line/trunk→F10 →F5 →F5

To program a block of lines/trunks:
F4 →F9 →Type pool dial-out code→F10 →Select block of lines/trunks→Toggle letter R On/Off→F10 →F5 →F5

Procedure: Trunks to Pools Assignment

	Console Display/Instructions	Additional Information	PC
1	**Select the Lines and Trunks menu.**		
	System Programming: > Make a selection System Extensions SysRenumber Options Operator Tables LinesTrunks AuxEquip Exit NightSrvce		F4
2	**Select Pools.**		
	Lines and Trunks: > Make a selection LS/GS/DSL PRI TIE Lines Copy TT/LS Disc RemoteAccss DID Pools Exit Toll Type		F9
3	**Enter the pool number.**		
	Pools: Enter pool number Backspace Exit Enter	Dial or type [*nnn*].	↵

	Console Display/Instructions	Additional Information	PC
4	**Save your entry.**		
	Select **Enter**.		F10
5	**Specify the pool line(s).**	● ◆	

	`Pool xxx:`
	`Assign lines to pool`
	`Lines 01-20  Entry Mode`
	`Lines 21-40`
	`Lines 41-60`
	`Lines 61-80`
	`Exit`
		xxx = pool dial-out code entered in Step 3
		
		For a single line/trunk, go to
		● Single Line Procedure.
		
		For a block of lines/trunks go to
		◆ Block Procedure.	

● Single Line Procedure

1	**Specify entry mode.**		
	Select **Entry Mode**.		F6
2	**Enter the line/trunk number for the pool.**		

	`Pool xxx:`
	`Enter line/trunk number`
	
	`Delete`
	`Backspace`
	`Exit  Enter`
		xxx = pool dial-out code entered in Step 3
		
		Dial or type:
		Trunk number [*nnn*]
		Slot and port number ✱[*sspp*]
		Logical ID number #[*nnn*].	

3	**Assign or remove the line/trunk from the pool.**		
	Select **Enter** or **Delete**.	You may continue to assign or remove additional lines/trunks from the pool by repeating Steps 2 and 3.	F10 F8
4	**Return to the System Programming menu.**		
	Select **Exit** two times.		F5 F5

◆ Block Procedure

	Console Display/Instructions	Additional Information	PC
1	**Specify the block of 20 lines associated with the 20 line buttons on the system programming console.**		
	Select `Lines 01-20`		F1
	`Lines 21-40`		F2
	`Lines 41-60`		F3
	`Lines 61-80`.		F4
2	**Assign the appropriate lines/trunks to the pool.**		
		Toggle the red LED on or off as required. On = trunk is assigned to pool specified Off = trunk is not assigned to pool specified.	
3	**Return to the System Programming menu.**		
	Select `Exit` two times.		F5 F5

Copy Options for Lines/Trunks

Use this procedure to copy options assigned to loop-start or ground-start trunks, Tie trunks, or DID trunks. Note that many of these options apply to Hybrid/PBX systems only. The following information is copied for each line/trunk type:

- **Loop-Start or Ground-Start Trunks** (including those emulated on T1 facilities). Toll type, signaling type, and trunk pool assignment (Hybrid/PBX only).
- **Tie Trunks.** Direction, Tie trunk type, E&M signal, dial mode, dial tone, answer supervision time, disconnect time, and trunk pool assignment (Hybrid/PBX only).
- **DID Trunks** (Hybrid/PBX only). Block assignment and disconnect time.

To find out whether there is an optional feature assigned that you would like to copy, use **Inspct** from the system programming console or PgDn on a PC.

NOTES:

1. You can copy options to a block of lines/trunks only if they are all the same type (loop-start, ground-start, Tie, or DID). If you attempt to copy assignments and there is mismatch in line/trunk type, information is copied to that point only. You receive no error message.
2. If you are copying options to a block of lines/trunks, they must be sequentially numbered.
3. If the block you are copying to includes an invalid line/trunk type, the copying process stops at the invalid type. Only the lines/trunks that were copied to before the invalid type was found are copied successfully.

4. If you are copying assignments to a block of lines/trunks and one of the lines or trunks is in use, you see the message `Trunk Busy - Pls wait` on your display. The copying for the rest of the lines/trunks in the block is delayed until the busy line/trunk becomes idle. If you exit without waiting for the copying to complete, the copying done up to that point is not canceled.

Summary: Copy Options for Lines/Trunks

Programmable by	System manager
Mode	All (but note differences)
Idle Condition	Not required
Planning Form	Form 2c, System Numbering: Line/Trunk Jacks Form 3c, Incoming Trunks: TIE Form 3d, Incoming Trunks: DID
Factory Setting	Not applicable
Valid Entries	Not applicable
Inspect	No
Copy Option	Not applicable

Console Procedure	To copy individual lines/trunks:
	`LinesTrunks`→`Copy`→`Single`→Dial copy from trunk no.→`Enter`→Dial copy to trunk no.→`Enter`→`Exit`→`Exit`→`Exit`
	To copy blocks of lines/trunks:
	`LinesTrunks`→`Copy`→`Block`→Dial copy from trunk no.→`Enter`→Dial first copy to trunk no. in block→`Enter`→Dial last copy to trunk no. in block→`Enter`→`Exit`→`Exit`→`Exit`

PC Procedure	To copy individual lines/trunks: [F4]→[F7]→[F1]→Type copy to trunk no.→[F10]→Type copy from trunk no.→[F10]→[F5]→[F5]→[F5] To copy blocks of lines/trunks: [F4]→[F7]→[F2]→Type copy from trunk no.→Type first copy to trunk no. in block→[F10]→[F5]→Type last copy to trunk no. in block→[F10]→[F5]→[F5]→[F5]

Procedure: Copy Options for Lines and Trunks

Console Display/Instructions	Additional Information	PC
1 Select the Lines and Trunks menu.		
System Programming: > Make a selection System Extensions SysRenumber Options Operator Tables LinesTrunks AuxEquip Exit NightSrvce		F4
2 Select Copy.		
Lines and Trunks: > Make a selection LS/GS/DSL PRI TIE Lines Copy TT/LS Disc RemoteAccss DID Pools Exit Toll Type		F7
3 Specify trunk(s).	● ◆	
Copy Trunks: Make a selection Single Block Exit	To copy a single trunk, select **Single** and go to ● Single Trunk Procedure. To copy a block of trunks, select **Block** and go to ◆ Block of Trunks Procedure.	F1 F2

● Single Trunk Procedure

1 Enter the trunk number to copy from.		
Copy Trunk Info From: Enter trunk number Backspace Exit Enter	Dial or type: Trunk number [*nnn*] Slot and port number *[*sspp*] Logical ID number #[*nnn*].	
2 Save your entry.		
Select **Enter**.	*If you get the Station Busy message, wait for an idle condition or exit system programming and try again later.*	F10

	Console Display/Instructions	Additional Information	PC
3	**Enter the trunk number to copy to.**		
	COPY Trunk *xxx* To: Enter trunk number Backspace Next Exit Enter	*xxx* = "copy from" trunk entered in Step 1 Dial or type: Trunk number [*nnn*] Slot and port number ✱[*sspp*] Logical ID number #[*nnn*].	
4	**Continue to copy options from this trunk or to another trunk or go to Step 5.**		
	Select **Next**.	Return to Step 3. The next QCC operator will be displayed on Line 1.	F9
5	**Save your entry.**		
	Select **Enter**.		F10
6	**Return to the System Programming menu.**		
	Select **Exit** three times.		F5 F5 F5

◆ Block Of Trunks Procedure

1	**Enter the trunk number to copy from.**		
	Copy Trunk: Enter copy from trunk number Backspace Exit Enter	Dial or type: Trunk number [*nnn*] Slot and port number ✱[*sspp*] Logical ID number #[*nnn*].	
2	**Save your entry.**		
	Select **Enter**.	*If you get the Station Busy message, wait for an idle condition or exit system programming and try again later.*	F10
3	**Enter the first trunk number to copy to.**		
	COPY Trunk *xxx* To: Enter starting trunk number Backspace Exit Enter	*xxx* = "copy from" trunk entered in Step 1 Dial or type: Trunk number [*nnn*] Slot and port number ✱[*sspp*] Logical ID number #[*nnn*].	

	Console Display/Instructions	Additional Information	PC
4	**Save your entry.**		
	Select **Enter**.		F10
		If you get the Station Busy message, wait for an idle condition or exit system programming and try again later.	
5	**Enter the last trunk number in the block to copy to.**		

	`START at Trunk xxx To:`
	`Enter ending trunk number`
	
	`Backspace`
	`Exit  Enter`
		xxx = "start copy to" trunk entered in Step 3
		
		Dial or type:
		Trunk number [*nnn*]
		Slot and port number *[*sspp*]
		Logical ID number [*nnn*].	

6	**Save your entry.**		
	Select **Enter**.		F10
7	**Return to the System Programming menu.**		
	Select **Exit** three times.		F5 F5 F5

DS1 Facilities

Use the procedures in this section to program the following options for DS1 (digital signal level 1) facilities (T1 or PRI) connected to a 100D (DS1) module:

- Type of DS1 facility
  - T1
  - ISDN (Integrated Services Digital Network) Primary Rate Interface (PRI)
- Switched 56 Dial Plan Routing
- Frame Format
- Zero Code Suppression
- Signaling Mode
- Line Compensation
- Channel Service Unit

Type of DS1 Facility

Use this procedure to specify the type of facility (T1 or PRI) connected to a 100D (DS1) module. If T1 type is programmed, and the channels are used for emulation and/or AT&T Switched Network (ASN), you must specify the type of channel emulation.

If the type is T1 and the type of channel emulation is tie trunk, you must specify whether the lines/trunks are TIE-PBX, Toll, or Switched 56 Data service. The valid settings are as follows:

- **TIE-PBX.** Select when emulated tie trunks are used to connect to another communications system (such as PBX or Centrex). The transmit/receive parameter is set to 0/4.
- **Toll.** Select when emulated tie trunks are used for ASN services (such as Megacom®, Megacom 800, or Software Defined Network). The transmit/receive parameter is set to 0/6.
- **TIE - S56 Data.** Select when emulated tie trunks are used for Switched 56 Data Service. Switched 56 Data Service is available only in Release 4.0 and later.

If the type is T1 and S56 Data Network Service is selected, you must specify the following parameters (Switched 56 Data Service is available only in Release 4.0 and later):

- **Direction.** Specifies whether the trunk operates in one- or two-way direction. For one-way trunks, Outgoing Only or Incoming Only must also be specified.
- **Trunk Seizure Type.** Trunk seizure type is administered independently for incoming or outgoing directions. Select one of the following: Wink Start; Delay Start, or Automatic Start.
- **Answer Supervision Time.** The time in milliseconds the answer supervision signal must be present to be considered valid.
- **Disconnect Time.** The time in milliseconds the disconnect signal must be present to be considered valid.
- **Dial Mode.** Dial mode is set independently for incoming or outgoing directions (Inmode or Outmode). Select either Rotary or Touch-Tone.

  NOTE:
  Touch-Tone receivers are required on the far-end switch when the setting is Touch-Tone.

Table 4–1 shows the factory setting for each S56 Data Network Service option and the valid range for each threshold.

If you select T1, channels can emulate ground- or loop-start trunks, tie trunks, or DID trunks in any combination. Note that unused channels must be specified as unequipped.

If either T1 or PRI is selected, channels can be used for ASN services. When T1 channels are used for ASN services, each channel must be programmed for tie trunk emulation.

If you select PRI, you must also perform additional procedures. At a minimum, the Framing Mode and Zero Code Suppression procedures must be performed. See “PRI Facilities” for more information.

Summary: Type of DS1 Facility

Programmable by	System manager
Mode	All
Idle Condition	100D module idle
Planning Form	Form 2c, System Numbering: Line/Trunk Jacks Form 3b, Incoming Trunks: DS1 Connectivity (100D module)
Factory Setting	T1, See Table 4.1 for options
Valid Entries	T1, PRI
Inspect	Yes
Copy Option	No

Console Procedure

To select PRI:
LinesTrunks→LS/GS/DS1→Dial slot no.→Enter→Type→PRI→Enter→Exit→Exit→Exit→Exit

To select T1: All Ground, All Loop, or All Unequip:
LinesTrunks→LS/GS/DS1→Dial slot no.→Enter→Type→T1→Enter→Select type of emulation→Enter→Exit→Exit→Exit→Exit

To select T1: Ground-Start, Loop-Start, All Tie, or Unequip:
LinesTrunks→LS/GS/DS1→Dial slot no.→Enter→Type→T1→Enter→Select type of emulation→Enter→Dial channel no.→Enter→Exit→Exit→Exit→Exit

To select T1: All DID:
LinesTrunks→LS/GS/DS1→Dial slot no.→Enter→Type→T1→Enter→**More**→All DID→Enter→Exit→Exit→Exit→Exit

To select T1: DID:
LinesTrunks→LS/GS/DS1→Dial slot no.→Enter→Type→T1→Enter→**More**→DID→Enter→Dial channel no.→Enter→Exit→Exit→Exit→Exit

To select T1- All Tie:
LinesTrunks→LS/GS/DS1→Dial slot no.→Enter→Type→T1→Enter→All TIE→Enter→TIE-PBX, Toll, or S56→Enter→Dial channel no.→Enter→Exit→Exit→Exit→Exit

To select T1- Tie:
LinesTrunks→LS/GS/DS1→Dial slot no.→Enter→Type→T1→Enter→TIE→Enter→TIE-PBX, Toll, or S56→Enter→Dial channel no.→Enter→Exit→Exit→Exit→Exit

To select T1: All Switched 56 Data:
LinesTrunks→LS/GS/DS1→Dial slot no.→Enter→Type→T1→Enter→**More**→ALL S56 Data→Enter→Select Direction, Intype, Outtype, AnsSupv, Disconnect, Inmode, or Outmode→Program options→Enter→Exit→Exit→Exit→Exit

To select T1: Switched 56 Data:
LinesTrunks→LS/GS/DS1→Dial slot no.→Enter→Type→T1→Enter→**More**→S56 Data→Enter→Dial channel no.→Enter→Select Direction, Intype, Outtype, AnsSupv, Disconnect, Inmode, or Outmode→Program options→Enter→Exit→Exit→Exit→Exit

PC Procedure

To select PRI:
[F4]→[F1]→Type slot no.→[F10]→[F1]→[F2]→[F10]→[F5]→[F5]→[F5]→[F5]

To select T1: All Ground, All Loop, All Unequip:
[F4]→[F1]→Type slot no.→[F10]→[F1]→[F1]→[F10]→[PgUp]→Select type of emulation →[F10]→[F5]→[F5]→[F5]→[F5]

To select T1: Ground-Start, Loop-Start, All Tie, or Unequip:
[F4]→[F10]→Type slot no.→[F10]→[F1]→[F1]→[F10]→Select type of emulation→[F10]→Type channel no.→[F10]→[F5]→[F5]→[F5]→[F5]

To select T1: All DID:
[F4]→[F1]→Type slot no.→[F10]→[F1]→[F1]→[F10]→[PgUp]→[F7]→[F10]→[F5]→[F5]→[F5]→[F5]

To select T1: DID:
[F4]→[F10]→Type slot no.→[F10]→[F1]→[F1]→[F10]→[PgUp]→[F1]→[F10]→Type channel no.→[F10]→[F5]→[F5]→[F5]→[F5]

To select T1- All Tie:
[F4]→[F1]→Type slot no.→[F10]→[F1]→[F1]→[F10]→[F1], [F2], or [F3]→[F10]→[F5]→[F5]→[F5]→[F5]

To select T1- Tie:
[F4]→[F1]→Type slot no.→[F10]→[F1]→[F1]→[F10]→[F1], [F2], or [F3]→[F10]→Type channel no.→[F10]→[F5]→[F5]→[F5]→[F5]

To select T1: ALL Switched 56 Data:
[F4]→[F1]→Type slot no.→[F10]→[F1]→[F1]→[F10]→[PgUp]→[F7] →[F10]→Select [F1], [F2], [F3], [F4], [F5], [F6], or [F7]→Program options→[F10]→[F5]→[F5]→[F5]→[F5]

To select T1: Switched 56 Data:
[F4]→[F1]→Type slot no.→[F10]→[F1]→[F1]→[F10]→[PgUp]→[F2]→[F10]→Type channel no.→[F10]→Select [F1], [F2], [F3], [F4], [F5], [F6], or [F7]→Program options→[F10]→[F5]→[F5]→[F5]→[F5]

Table 4–1. Switched 56 Data Signaling Options

Option	Factory Setting	Range
Direction	Two Way	Two Way, Outgoing, Incoming
Intype	Wink-Route by Dial Plan	Wink-Route by Dial Plan, Delay-Route by Dial Plan Auto-Route by Line Appearance
Outtype	Wink	Wink, Delay, Auto
Answer Supervision	300 ms.	200-4800 ms. (increments of 20 ms)
Disconnect	300 ms.	200-4800 ms. (increments of 20 ms)
Inmode	Touch Tone	Touch Tone, Rotary
Outmode	Touch Tone	Touch Tone, Rotary

Procedure: Type of DS1 Facility

	Console Display/Instructions	Additional Information	PC
1	**Select the Lines and Trunks menu.**		
	System Programming > Make a selection System Extensions SysRenumber Options Operator Tables LinesTrunks AuxEquip Exit NightSrvce		F4
2	**Select Loop-Start/Ground-Start/DS1.**		
	Lines and Trunks: > Make a selection LS/GS/DS1 PRI TIE Lines Copy TT/LS Disc RemoteAccss DID Pools Exit Toll Type		F1

	Console Display/Instructions	Additional Information	PC
3	**Enter the slot number in the control unit that contains the 100D module (*nn* = 1 to 17).**		

	`Loop/Ground/DS1:`
	`Enter slot number(1-17)`
	
	`Backspace`
	`Exit  Enter`
		Dial or type [*nn*].	

4	**Save your entry.**		
	Select **Enter**.	*If you get the System Busy message, wait for an idle condition and try again or exit system programming and try again later.*	F10
5	**Select Type.**		

	`DS1 Slot xx:`
	`Make a selection`
	`Type  Line Comp`
	`FrameFormat  ChannelUnit`
	`Suppression`
	`Signaling`
	`Exit`
		xx = slot number entered in Step 3	F1

6	**Select a facility type.**		

	`DS1 Slot xx:`
	`Select one`
	`T1`
	`PRI`
	
	`Exit  Enter`
		xx = slot number entered in Step 3
		
		Select **T1** or
		PRI.
			F1
			F2

7	**Save your entry.**		
	Select **Enter**.	If you selected **PRI**, you have finished this procedure. Go to “Frame Format.”	F10

	Console Display/Instructions	Additional Information	PC
8	**Select a trunk type.**		

	`Port Type Slot xx: >`
	`Select One`
	`GroundStart  All Ground`
	`Loop Start  All Loop`
	`TIE  All TIE`
	`Unequipped  All Unequip`
	`Exit  Enter`
		xx = slot number entered in Step 3
		
		If the trunk type you want is not displayed, go to the second screen of the Port Type Slot menu.
		
		Press **More** to view second screen.
			PgUp

		Press the button or function key next to your selection.	

	`Port Type Slot xx:`
	`Select one`
	`DID  All DID`
	`S56 Data  All S56 Data`
	
	`Exit  Enter`
		Press the button or function key next to your selection.	

9	**Save your entry.**	▲ ✽ ● ◆	
	Select `Enter`.	If you selected `All Ground`, `All Loop`, `All Unequipped`, or `All DID`, you have finished this procedure. If you selected `Ground Start`, `Loop Start`, `DID`, or `Unequipped` trunks, continue with Step 10. If you selected `TIE` trunks, go to ▲ Tie Trunk Procedure.. If you selected `All TIE` trunks, go to ✽ All Tie Trunk Procedure.. If you selected `S56 Data`, go to ◆ S56 Data Procedure. If you selected `ALL S56 Data`, go to ● All S56 Data Procedure.	F10

Console Display/Instructions	Additional Information	PC
10 Enter the channel number (*nn* = 1 to 24).		

`**** slot xx:`
`Enter channel num (1 to 24)`
 	
`Delete`
`Backspace Next`
`Exit Enter`
	**** = option name selected in Step 8
	xx = slot entered in Step 3
	
	Dial or type [*nn*].	

11 Assign or remove the channel.		
Select **Enter** or **Delete**.	You may continue to assign or remove additional channels by repeating the last two steps.	F10 F8
12 Continue to assign the channel to another slot or go to Step 13.		
Select **Next**.	Return to Step 10. The next slot will be displayed on Line 1.	F9
13 Save your entry.		
Select **Enter**.		F10
14 Return to the System Programming menu.		
Select **Exit** four times.		F5 F5 F5 F5

▲ Tie Trunk Procedure

1 Specify the emulated trunks as TIE-PBX, Toll or S56 Data.		

`Tie Type slot xx:`
`Select one`
`TIE-PBX`
`Toll`
`S56 Data`
 	
`Exit Enter`
	xx = slot entered in Step 3
	
	TIE-PBX: Transmit-receive loss set to 0/4.
	Toll: Channels used for network services transmit receive loss set to 0/6.
	S56 Data: Channels used for data.	

	Select **TIE-PBX**, **Toll** **S56 Data**	F1 F2 F3
2 Save your entry.		
Select **Enter**.		F10

	Console Display/Instructions	Additional Information	PC
3	**Enter the channel number (*nn* = 1 to 24).**		

	`TIE Lines Slot xx:`
	`Enter channel num (1-24)`
	
	`Delete`
	`Backspace Next`
	`Exit Enter`
		xx = slot number entered in Step 3
		
		Dial or type [*nn*].	

4	**Assign or remove the channel.**		
	Select **Enter** or **Delete**.		F10 F8
		You may continue to assign or remove additional channels by repeating Steps 3 and 4.	
5	**Continue to assign the channel to another slot or go to Step 6.**		
	Select **Next**.		F9
		Return to Step 11. The next slot will be displayed on Line 1.	
6	**Save your entry.**		
	Select **Enter**.		F10
7	**Return to the System Programming menu.**		
	Select **Exit** four times.		F5 F5 F5 F5

✚ All Tie Trunk Procedure

1	**Specify the emulated trunks as TIE-PBX, Toll or S56 Data.**		

	`All TIE Type Slot xx:`
	`Select one`
	`TIE-PBX`
	`Toll`
	`S56 Data`
	
	`Exit Enter`
		xx = slot entered in Step 3
		
		TIE-PBX: Transmit-receive loss set to 0/4.
		Toll: Channels used for network services transmit receive loss set to 0/6.
		S56 Data: Channels used for data.	

		Select **TIE-PBX**, **Toll** **S56 Data**	F1 F2 F3
2	**Save your entry.**		
	Select **Enter**.		F10
3	**Return to the System Programming menu.**		
	Select **Exit** four times.		F5 F5 F5 F5

◆ S56 Data Procedure

Console Display/Instructions	Additional Information	PC
1 Enter the channel number (*nn* = 1 to 24).		

`S56 Data Lines Slot xx:`
`Enter channel num (1-24)`
 	
`Delete`
`Backspace`
`Exit  Enter`
	xx = slot number entered in Step x.
	
	Dial or type [*nn*].
		↵

2 Assign or remove the channel.		
Select **Enter** or **Delete**.	If you select **Enter**, continue with Step 3. If you select **Delete**, return to Step 1.	F10 F8
3 Select an option.	▲ ✚ ✪ ✶ ⊙	

`S56 Data Signaling:`
`Make a selection`
`Direction  Disconnect`
`Intype  Inmode`
`Outtype  Outmode`
`AnsSupvr`
`Exit`
	If you select Direction, go to ▲ Direction procedure.
	
	If you select Intype or Outtype, go to ✚ Trunk Seizure Type procedure.
	
	If you select AnsSupvr, go to ✪ Answer Supervision Timing Procedure.
	
	If you select Disconnect, go to ✶ Disconnect Timing Procedure.
	
	If you select Inmode or Outmode, go to ⊙ Dial Mode Procedure.
		F1
		
		F2
		F3
		
		F4
		
		F5
		
		F6
		F7

▲ Direction Procedure

1 Select Direction.		

`S56 Data:  Ch xx:`
`Enter channel direction`
`Two Way`
`Outgoing`
`Incoming`
`Next`
`Exit  Enter`
	xx = channel selected in Step x.
	
	Select **Two Way**, **Outgoing**, or **Incoming**
		F1
		F2
		F2

2 Continue to assign direction to the next channel or go to Step 3.		
Select **Next**.	Return to Step 1. The next channel will be displayed on Line 1.	F9

	Console Display/Instructions	Additional Information	PC
3	**Save your entry.**		
	Select **Enter**.		F10
4	**Return to the System Programming menu.**		
	Select **Exit** four times.		F5 F5 F5 F5

✚ Trunk Seizure Type Procedure

1 Select Trunk Seizure Type.

```
S56 Data:          Ch xx:
Select **type
Wink
Delay
Auto
                Next
Exit            Enter
```

xx = channel selected in Step x.
** = In or Out

Select **Wink**, F1
Delay, or F2
Auto F3

If **Intype** was selected in Step 3 of the main procedure, the following screen options will appear:

```
Wink-Route by Dial Plan
Delay-Route by Dial Plan
Auto-Route by LineAprnce
```

2 Continue to assign Intype or Outtype to the next channel or go to Step 6.

Select **Next**. F9

Return to Step 1. The next channel will be displayed on Line 1.

3 Save your entry.

Select **Enter**. F10

4 Return to the System Programming menu.

Select **Exit** four times. F5 F5 F5 F5

✪ Answer Supervision Timing Procedure

1 Erase the current answer supervision time (*nnnn*).

```
S56 Data           Ch xx:
Enter AnsSupervisionTime
(20-4800, increment 20)
nnnn

Backspace       Next
Exit            Enter
```

xx = number entered in Step 1

Press **Drop**. Alt + P

2 Enter the new answer supervision time (*nnnn* = 20 to 4800 ms, in increments of 20 ms).

Dial or type [*nnnn*]. ↵

	Console Display/Instructions	Additional Information	PC
3	**Continue to assign answer supervision time to another channel or go to Step 4.**		
	Select **Next**.		F9
		Return to Step 1. The next channel will be displayed on Line 1.	
4	**Save your entry.**		
	Select **Enter**.		F10
5	**Return to the System Programming menu.**		
	Select **Exit** four times.		F5 F5 F5 F5

✶ Disconnect Timing Procedure

1 Erase the current disconnect time (*nnnn*).

```
S56 Data          Ch xx:
Enter Disconnect time
(140-4800)
nnnn

Backspace     Next
Exit          Enter
```

xx = number entered in Step 1

Press **Drop**. Alt + P

2 Enter the new disconnect time (*nnnn*) = 140 to 4800 ms, in increments of 20 ms).

Dial or type [*nnnn*].

3 Continue to assign disconnect time to another channel or go to Step 4.

Select **Next**. F9

Return to Step 1. The next channel will be displayed on Line 1.

4 Save your entry.

Select **Enter**. F10

5 Return to the System Programming menu.

Select **Exit** four times. F5 F5 F5 F5

⊙ Dial Mode Procedure

1 Choose an option.

```
S56 Data:         Ch xx:
Select **mode
Rotary
Touch Tone

          Next
Exit      Enter
```

xx = channel selected in Step x.
** = In or Out

Select **Rotary** or F1
Touch Tone F2

	Console Display/Instructions	Additional Information	PC
2	**Continue to assign Dial Mode type to the next channel or go to Step 3.**		
	Select **Next**.		F9
		Return to Step 13. The next channel will be displayed on Line 1.	
3	**Save your entry.**		
	Select **Enter**.		F10
4	**Return to the System Programming menu.**		
	Select **Exit** four times.		F5 F5 F5 F5

● All S56 Data Procedure

1	**Select an option.**	▲ ✚ ✪ ✶ ⊙	
	S56 Data Signaling: Make a selection Direction Disconnect Intype Inmode Outtype Outmode AnsSupvr Exit		
		If you select Direction, go to ▲ Direction procedure.	F1
		If you select Intype or Outtype, go to ✚ Trunk Seizure Type procedure.	F2 F3
		If you select AnsSupvr, go to ✪ Answer Supervision Timing Procedure.	F4
		If you select Disconnect, go to ✶ Disconnect Timing Procedure.	F5
		If you select Inmode or Outmode, go to ⊙ Dial Mode Procedure.	F6 F7

▲ Direction Procedure

1	**Select Direction.**		
	S56 Data: Enter channel direction Two Way Outgoing Incoming Next Exit Enter		
		Select **Two Way**,	F1
		Outgoing, or	F2
		Incoming	F2
2	**Save your entry.**		
	Select **Enter**.		F10
3	**Return to the System Programming menu.**		
	Select **Exit** four times.		F5 F5 F5 F5

✚ Trunk Seizure Type Procedure

Console Display/Instructions	Additional Information	PC
1 Select Trunk Seizure Type.		

`S56 Data:`
`Select **type`
`Wink`
`Delay`
`Auto`
`Next`
`Exit Enter`
	** = In or Out
	
	Select `Wink`,
	`Delay`, or
	`Auto`
		
		F1
		F2
		F3

If `Intype` was selected in Step 3 of the main procedure, the following screen options will appear:
`Wink-Route by Dial Plan`
`Delay-Route by Dial Plan`
`Auto-Route by LineAprnce`		

2 Save your entry.		
Select `Enter`.		F10
3 Return to the System Programming menu.		
Select `Exit` four times.		F5 F5 F5 F5

✪ Answer Supervision Timing Procedure

1 Erase the current answer supervision time (*nnnn*).		

`S56 Data`
`Enter AnsSupervisionTime`
`(20-4800, increment 20)`
nnnn
 	
`Backspace Next`
`Exit Enter`
	Press **Drop**.	Alt + P

2 Enter the new answer supervision time (*nnnn* = 20 to 4800 ms, in increments of 20 ms).		
	Dial or type [*nnnn*].	↵
3 Save your entry.		
Select `Enter`.		F10
4 Return to the System Programming menu.		
Select `Exit` four times.		F5 F5 F5 F5

✶ Disconnect Timing Procedure

	Console Display/Instructions	Additional Information	PC
1	**Erase the current disconnect time (*nnnn*).**		
	All S56 Data Enter Disconnect time (140-4800) *nnnn* Backspace Next Exit Enter	Press **Drop**.	Alt + P
2	**Enter the new disconnect time (*nnnn*) = 140 to 4800 ms, in increments of 20 ms).**		
		Dial or type [*nnnn*].	↵
3	**Save your entry.**		
	Select Enter.		F10
4	**Return to the System Programming menu.**		
	Select Exit four times.		F5 F5 F5 F5

⊙ Dial Mode Procedure

1	**Choose an option.**		
	All S56 Data: Select **mode Rotary Touch Tone Next Exit Enter	** = In or Out Select Rotary or Touch Tone	 F1 F2
2	**Save your entry.**		
	Select Enter.		F10
3	**Return to the System Programming menu.**		
	Select Exit four times.		F5 F5 F5 F5

Switched 56 Dial Plan Routing

Dial plan routing provides a way to route incoming calls received on a Switched 56 Network line. An incoming call is routed by matching the incoming number and then optionally deleting and/or adding digits to direct the call to a specific endpoint. The expected digits is the number of incoming digits outpulsed from the central office.

Summary: Switched 56 Dial Plan Routing

Programmable by	System manager
Mode	Hybrid/PBX
Idle Condition	100D module idle
Planning Form	Form 3b, Incoming Trunks: DS1 Connectivity (100D module)
Factory Setting	D4 compatible
Valid Entries	D4, ESF
Inspect	No
Copy Option	No

Console Procedure	To specify Expected Digits:
	`LinesTrunks`→**MORE**→T1 Data NW→`S56 Dial Plan Routing`→`Expected Digits`→**Drop**→Dial expected digits →`Enter`→`Exit`→`Exit`→`Exit`
	To specify Delete Digits:
	`LinesTrunks`→**MORE**→T1 Data NW→`S56 Dial Plan Routing`→`Delete Digits`→**Drop**→Dial delete digits→ `Enter`→`Exit`→`Exit`→`Exit`
	To specify Add Digits:
	`LinesTrunks`→**MORE**→T1 Data NW→`S56 Dial Plan Routing`→`Add Digits`→**Drop**→Dial add digits→`Enter`→ `Exit`→`Exit`→`Exit`

PC Procedure	To specify Expected Digits: [F4]→[PgUp]→[F9]→[F1]→[F1]→[Alt] + [P]→Type expected digits→[F10]→[F5]→[F5]→[F5] To specify Delete Digits: [F4]→[PgUp]→[F9]→[F1]→[F2]→[Alt] + [P]→Type delete digits→[F10]→[F5]→[F5]→[F5] To specify Add Digits: [F4]→[PgUp]→[F9]→[F1]→[F3]→[Alt] + [P]→Type add digits →[F10]→[F5]→[F5]→[F5]

Switched 56 Data Dial Plan Routing

	Console Display/Instructions	Additional Information	PC
1	**Select the Lines and Trunks menu.**		
	System Programming: > Make a selection System Extensions SysRenumber Options Operator Tables LinesTrunks AuxEquip Exit NightSrvce		F4
2	**Go to the second screen of the Lines and Trunks menu.**		
	Lines and Trunks: > Make a selection LS/GS/DS1 PRI TIE Lines Copy TT/LS Disc RemoteAccss DID Pools Exit Toll Type	Press **More**.	PgUp
3	**Select T1 Data NW.**		
	Lines and Trunks: > Make a selection HoldDiscnct LS-ID Delay PrncipalUsr ClockSync QCC Prior BRI QCC Oper T1 Data NW Exit		F8
4	**Select T1 Data NW.**		
	T1 Data Network: > Make a selection S56 Dial Plan Routing Exit		F1
5	**Select an option.**	▲ ✚ ✪	
	S56 Data Dial Plan Rtng: Expected Digits Add Digits Delete Digits Exit Disconnect	If you select Expected Digits, go to ▲ Expected Digits procedure. If you select Add Digits, go to ✚ Add Digits procedure. If you select Delete Digits, go to ✪ Delete Digits Procedure.	F1 F2 F3

▲ Expected Digits Procedure

	Console Display/Instructions	Additional Information	PC
1	**Erase the current number of expected digits (*n*).**		

	`S56 Data Expected Digits:`
	`Enter number of expected`
	`digits (1-3)`
	`n`
	
	`Backspace`
	`Exit  Enter`
		Press **Drop**.	Alt + P

2	**Enter the new number of expected digits (*n = 0 to 3*).**		
		Dial or type [*n*].	
3	**Save your entry.**		
	Select `Enter`.		F10
4	**Return to the System Programming menu.**		
	Select `Exit` four times.		F5 F5 F5 F5

✚ Add Digits Procedure

1	**Erase the current number of digits to add (*nnnn* = 0 to 9999*).***		

	`S56 Data Add Digits:`
	`Enter digits to add`
	
	`nnnn`
	
	`Backspace`
	`Exit  Enter`
		Press **Drop**.	Alt + P

2	**Enter the new number of digits to add (*n = 0 to 3*).**		
		Dial or type [*n*].	
3	**Save your entry.**		
	Select `Enter`.		F10
4	**Return to the System Programming menu.**		
	Select `Exit` four times.		F5 F5 F5 F5

Delete Digits Procedure

	Console Display/Instructions	Additional Information	PC
1	**Erase the current number of digits to delete (*n*).**		
	S56 Data Delete Digits: Enter number of digits to delete (0-4) *n* Backspace Exit Enter	Press **Drop**.	Alt + P
2	**Enter the new number of digits to delete (*n = 0 to 4*).**		
		Dial or type [*n*].	↵
3	**Save your entry.**		
	Select Enter.		F10
4	**Return to the System Programming menu.**		
	Select Exit four times.		F5 F5 F5 F5

Frame Format

Use this procedure to specify the framing format for the 100D module as D4-compatible or Extended Superframe. Your selection must match the framing mode at the far end of the DS1 facility.

Summary: Frame Format

Programmable by	System manager
Mode	All
Idle Condition	100D module idle
Planning Form	Form 3b, Incoming Trunks: DS1 Connectivity (100D module)
Factory Setting	D4 compatible
Valid Entries	D4, ESF
Inspect	No
Copy Option	No
Console Procedure	LinesTrunks→LS/GS/DS1→Dial slot no.→Enter→ FrameFormat→Select format type→Enter→Exit→Exit
PC Procedure	F4→F1→Type slot no.→F10→F2→Select format type →F10→F1→F5

Procedure: Frame Format

	Console Display/Instructions	Additional Information	PC
1	**Select the Lines and Trunks menu.**		
	System Programming: > Make a selection System Extensions SysRenumber Options Operator Tables LinesTrunks AuxEquip Exit NightSrvce		F4
2	**Select Loop-Start/Ground-Start/DS1.**		
	Lines and Trunks: > Make a selection LS/GS/DS1 PRI TIE Lines Copy TT/LS Disc RemoteAccss DID Pools Exit Toll Type		F1
3	**Enter the slot number in the control unit that contains the 100D module (*nn* = 1 to 17).**		
	Loop/Ground/DS1: Enter slot number(1-17) Backspace Exit Enter	Dial or type [*nn*].	
4	**Save your entry.**		
	Select **Enter**.		F10
5	**Select Frame Format.**		
	DS1 Slot *xx*: Make a selection Type Line Comp FrameFormat ChannelUnit Suppression Signaling Exit	*xx* = slot number entered in Step 3	F2
6	**Select a format type.**		
	DS1 Slot *xx*: Select one D4 Compatible Extended Super Frame	*xx* = slot number entered in Step 3 Select **D4 Compatible** or	F1

	Console Display/Instructions	Additional Information	PC
		Extended Super Frame.	F2
7	**Save your entry.**		
	Select **Enter**.		F10
8	**Return to the System Programming menu.**		
	Select **Exit** two times.		F5 F5
		If you are using PRI Facilities, go to "Zero Code Suppression."	

Zero Code Suppression

Use this procedure to specify zero code suppression for the 100D module as AMI zero code suppression (AMI-ZCS) or bipolar 8 zero suppression (B8ZS). Your selection must match the suppression at the far end of the DS1 facility.

Summary: Zero Code Suppression

Programmable by	System manager
Mode	All
Idle Condition	100D module idle
Planning Form	Form 3b, Incoming Trunks: DS1 Connectivity (100D module)
Factory Setting	AMI-ZCS
Valid Entries	AMI-ZCS, B8ZS
Inspect	No
Copy Option	No
Console Procedure	LinesTrunks→LS/GS/DS1→Dial slot no.→Enter→ Suppression→AMI-ZCS or B8ZS→Enter→Exit→Exit
PC Procedure	F4→F1→Type slot no.→F10→F3→F1 or F2→F10 →F5→F5

Procedure: Zero Code Suppression

	Console Display/Instructions	Additional Information	PC
1	**Select the Lines and Trunks menu.**		
	System Programming: > Make a selection System Extensions SysRenumber Options Operator Tables LinesTrunks AuxEquip Exit NightSrvce		F4

	Console Display/Instructions	Additional Information	PC
2	**Select Loop-Start/Ground-Start/DS1.**		
	Lines and Trunks: > Make a selection LS/GS/DS1 PRI TIE Lines Copy TT/LS Disc RemoteAccss DID Pools Exit Toll Type		F1
3	**Enter the slot number in the control unit that contains the 100D module (*nn* = 1 to 17).**		
	Loop/Ground/DS1: Enter slot number(1-17) Backspace Exit Enter	Dial or type [*nn*].	↵
4	**Save your entry.**		
	Select **Enter**.		F10
5	**Select Suppression.**		
	DS1 Slot *xx*: Make a selection Type Line Comp FrameFormat ChannelUnit Suppression Signaling Exit	*xx* = slot number entered in Step 3	F3
6	**Select AMI zero code suppression or bipolar 8 zero substitution.**		
	DS1 Slot *xx*: Select one AMI-ZCS B8ZS Exit Enter	*xx* = slot number entered in Step 3 Select **AMI-ZCS** or **B8ZS**.	F1 F2
7	**Save your entry.**		
	Select **Enter**.		F10
8	**Return to the System Programming menu.**		
	Select **Exit** two times.		F5 F5

Signaling Mode

Use this procedure to specify the signaling for the 100D module as robbed-bit or common-channel signaling.

NOTE:
This procedure is needed only for T1 facilities; common-channel signaling is set automatically for PRI facilities.

Summary: Signaling Mode

Programmable by	System manager
Mode	All
Idle Condition	100D module idle
Planning Form	Form 3b, Incoming Trunks: DS1 Connectivity (100D module)
Factory Setting	Robbed bit
Valid Entries	Robbed Bit, Common Channel
Inspect	No
Copy Option	No
Console Procedure	LinesTrunks→LS/GS/DS1→Dial slot no.→Enter→Signaling→Select type of signaling→Enter→Exit→Exit
PC Procedure	F4→F1→Type slot no.→F10→F4→Select type of signaling→F10→F5→F5

Procedure: Signaling Mode

	Console Display/Instructions	Additional Information	PC
1	**Select the Lines and Trunks menu.**		
	System Programming: > Make a selection System Extensions SysRenumber Options Operator Tables LinesTrunks AuxEquip Exit NightSrvce		F4

	Console Display/Instructions	Additional Information	PC
2	**Select Loop-Start/Ground-Start/DS1.**		

	`Lines and Trunks: >`
	`Make a selection`
	`LS/GS/DS1  PRI`
	`TIE Lines  Copy`
	`TT/LS Disc  RemoteAccss`
	`DID  Pools`
	`Exit  Toll Type`
			F1

3	**Enter the slot number in the control unit that contains the 100D module (*nn* = 1 to 17).**		

	`Loop/Ground/DS1:`
	`Enter slot number(1-17)`
	
	`Backspace`
	`Exit  Enter`
		Dial or type [*nn*].	↵

4	**Save your entry.**		
	Select **Enter**.		F10
5	**Select Signaling.**		

	`DS1 Slot xx:`
	`Make a selection`
	`Type  Line Comp`
	`FrameFormat  ChannelUnit`
	`Suppression`
	`Signaling`
	`Exit`
		xx = slot number entered in Step 3	F4

6	**Select the type of signaling.**		

	`Signaling DS1 Slot xx:`
	`Select one`
	`Robbed Bit`
	`Common Channel`
	
	`Exit  Enter`
		xx = slot number entered in Step 3
		
		Select **Robbed Bit** or
		Common Channel.
			F1
			F2

7	**Save your entry.**		
	Select **Enter**.		F10
8	**Return to the System Programming menu.**		
	Select **Exit** two times.		F5 F5

Line Compensation

Use this procedure to specify the amount of cable loss in decibels. Cable loss is based on the length of cable between the 100D module and the Channel Service Unit, as shown below:

- 1 = 0.6 dB loss
- 2 = 1.2 dB loss
- 3 = 1.8 dB loss
- 4 = 2.4 dB loss
- 5 = 3.0 dB loss

Summary: Line Compensation

Programmable by	System manager
Mode	All
Idle Condition	100D module idle
Planning Form	Form 3b, Incoming Trunks: DS1 Connectivity (100D module)
Factory Setting	1 (0.6 dB loss)
Valid Entries	1 to 5
Inspect	No
Copy Option	No
Console Procedure	LinesTrunks→LS/GS/DS1→Dial slot no.→Enter→Line Comp→**Drop**→Dial line compensation value→Enter→Exit→Exit
PC Procedure	F4→F1→Type slot no.→F10→F6→Alt + P→Type line compensation value→F10→F5→F5

Procedure: Line Compensation

	Console Display/Instructions	Additional Information	PC
1	**Select the Lines and Trunks menu.**		
	System Programming: > Make a selection System Extensions SysRenumber Options Operator Tables LinesTrunks AuxEquip Exit NightSrvce		F4

	Console Display/Instructions	Additional Information	PC
2	**Select Loop-Start/Ground-Start/DS1.**		
	Lines and Trunks: > Make a selection LS/GS/DS1 PRI TIE Lines Copy TT/LS Disc RemoteAccss DID Pools Exit Toll Type		F1
3	**Enter the slot number in the control unit that contains the 100D module (*nn* = 1 to 17).**		
	Loop/Ground/DS1: Enter slot number(1-17) Backspace Exit Enter	Dial or type [*nn*].	
4	**Save your entry.**		
	Select **Enter**.		F10
5	**Select Line Compensation.**		
	DS1 Slot *xx*: Make a selection Type Line Comp FrameFormat ChannelUnit Suppression Signaling Exit	*xx* = slot number entered in Step 3	F6
6	**Erase the current line compensation value (*n*).**		
	Line Comp DS1 Slot *xx*: Enter line compensation value (1-5) *n* Backspace Exit Enter	*xx* = slot number entered in Step 3 Press **Drop**.	Alt + P
7	**Enter a value for the line compensation (*n* = 1 to 5).**		
		Dial or type [*n*].	
8	**Save your entry.**		
	Select **Enter**.		F10
9	**Return to the System Programming menu**.		
	Select **Exit** two times.		F5 F5

Channel Service Unit

Use this procedure to specify the type of equipment provided by the local telephone company as foreign exchange or special access.

NOTE:
You do not need to use this procedure unless your system emulates loop-start or ground-start with the T1 type of DS1 facility.

Summary: Channel Service Unit

Programmable by	System manager
Mode	All
Idle Condition	100D module idle
Planning Form	Form 3b, Incoming Trunks: DS1 Connectivity (100D module)
Factory Setting	Foreign Exchange
Valid Entries	Foreign Exchange, Special Access
Inspect	No
Copy Option	No
Console Procedure	LinesTrunks→LS/GS/DS1→Dial slot no.→Enter→ ChannelUnit→Foreign Exchange or Special Access→ Enter→Exit→Exit
PC Procedure	F4→F1→Type slot no.→F10→F8→F1 or F2→F10 →F5→F5

Procedure: Channel Service Unit

	Console Display/Instructions	Additional Information	PC
1	**Select the Lines and Trunks menu.**		
	System Programming: > Make a selection System Extensions SysRenumber Options Operator Tables LinesTrunks AuxEquip Exit NightSrvce		F4

	Console Display/Instructions	Additional Information	PC
2	**Select Loop-Start/Ground-Start/DS1.**		
	Lines and Trunks: > Make a selection LS/GS/DS1 PRI TIE Lines Copy TT/LS Disc RemoteAccss DID Pools Exit Toll Type		F1
3	**Enter the slot number in the control unit that contains the 100D module (*nn* = 1 to 17).**		
	Loop/Ground/DS1: Enter slot number(1-17) Backspace Exit Enter	Dial or type [*nn*].	↵
4	**Save your entry.**		
	Select **Enter**.		F10
5	**Select Channel Unit.**		
	DS1 Slot *xx*: Make a selection Type Line Comp FrameFormat ChannelUnit Suppression Signaling Exit	*xx* = slot number entered in Step 3	F7
6	**Select the type of channel unit.**		
	ChannelUnit DS1 Slot *xx*: Select one Foreign Exchange Special Access Exit Enter	*xx* = slot number entered in Step 3 Select **Foreign Exchange** or **Special Access**.	F1 F2
7	**Save your entry.**		
	Select **Enter**.		F10
8	**Return to the System Programming menu.**		
	Select **Exit** two times.		F5 F5

Tie Trunks

This section covers programming procedures for the following tie trunk options:

- Direction
- Tie Trunk Seizure Type
- E&M Signal
- Dial Mode
- Tie Trunk Dial Tone
- Tie Trunk Answer Supervision Time
- Disconnect Time

See “Equipment and Operations Reference” for additional information on tie trunks.

Direction

Use this procedure to specify whether tie trunks operate in a one- or two-way direction. For one-way tie trunks, you must also specify whether the direction is out or in.

Summary: Direction

Programmable by	System manager
Mode	All
Idle Condition	Tie trunk idle
Planning Form	Form 3c, Incoming Trunks: Tie
Factory Setting	Two-way
Valid Entries	Two-way, Outgoing, Incoming
Inspect	No
Copy Option	Yes
Console Procedure	`LinesTrunks`→`TIE Lines`→`Direction`→Dial trunk no.→ `Enter`→Specify direction→`Enter`→`Exit`→`Exit`
PC Procedure	[F4]→[F2]→[F1]→Type trunk no.→[F10]→Specify direction →[F10]→[F5]→[F5]

Procedure: Direction

	Console Display/Instructions	Additional Information	PC
1	**Select the Lines and Trunks menu.**		
	System Programming: > Make a selection System Extensions SysRenumber Options Operator Tables LinesTrunks AuxEquip Exit NightSrvce		F4
2	**Select TIE Lines.**		
	Lines and Trunks: > Make a selection LS/GS/DSL PRI TIE Lines Copy TT/LS Disc RemoteAccss DID Pools Exit Toll Type		F2
3	**Select Direction.**		
	TIE Trunks: Make a selection Direction Inmode Intype Outmode Outtype Dialtone E&M Signal AnsSupvr Exit Disconnect		F1
4	**Enter the tie trunk number.**		
	Direction: Enter trunk for assignmt Backspace Exit Enter	Dial or type: Trunk number [*nnn*] Slot and port number *[*sspp*] Logical ID number #[*nnn*].	↵
5	**Save your entry.**		
	Select **Enter**.	*If you get the Trunk Busy message, wait for an idle condition or exit system programming and try again later.*	F10

	Console Display/Instructions	Additional Information	PC
6	**Specify the trunk direction.**		
	Trunk *xxxx*: Select trunk direction Two Way OutGoing InComing Next Exit Enter	*xxxx* = trunk entered in Step 4	
		Select **Two Way**,	F1
		OutGoing, or	F2
		InComing.	F3
7	**Continue to assign the direction to another trunk or go to Step 8.**		
	Select **Next**.		F9
		Return to Step 6. The next trunk will be displayed on Line 1.	
8	**Save your entry.**		
	Select **Enter**.		F10
9	**Return to the System Programming menu.**		
	Select **Exit** two times.		F5 F5

Tie Trunk Seizure Type

Use this procedure to specify whether the seizure type of incoming or outgoing tie trunk is wink, delay, immediate, or automatic.

The following settings are recommended when T1 facilities are programmed for tie-trunk emulation to provide special network services [such as Megacom, Megacom 800, or Software Defined Network (SDN)]:

- If Automatic Route Selection (ARS) is used for all outgoing calls and no personal line or **Pool** buttons are used, assign the wink signaling type. Set the network to wink.
- If personal line or **Pool** buttons (pool or dial-out codes) are used for outgoing calls, assign the immediate signaling type. Set the network to dial. Contact your service provider for more information about the dial setting.
- If Dialed Number Identification Service (DNIS) is used for incoming calls, assign the wink signaling type. The network is also set to wink. (Setting both ends to immediate also works.) Contact your service provider for more information about the appropriate setting.
- When DNIS is not used for incoming calls, assign the automatic signaling type. The network is set to automatic.

Summary: Tie Trunk Type

Programmable by	System manager
Mode	All
Idle Condition	Tie trunk idle
Planning Form	Form 3c, Incoming Trunks: Tie
Factory Setting	Wink
Valid Entries	Wink, Delay, Immediate, Automatic
Inspect	No
Copy Option	Yes
Console Procedure	LinesTrunks→TIE Lines→Intype or Outtype→Dial trunk no.→Enter→Specify seizure type→Enter→Exit→Exit
PC Procedure	F4→F2→F2 or F3→Type trunk no.→F10→Specify seizure type→F10→F5→F5

Procedure: Tie Trunk Type

	Console Display/Instructions	Additional Information	PC
1	**Select the Lines and Trunks menu.**		
	System Programming: > Make a selection System Extensions SysRenumber Options Operator Tables LinesTrunks AuxEquip Exit NightSrvce		F4
2	**Select Tie Lines.**		
	Lines and Trunks: > Make a selection LS/GS/DSL PRI TIE Lines Copy TT/LS Disc RemoteAccss DID Pools Exit Toll Type		F2
3	**Select Intype (incoming) or Outtype (outgoing).**		
	TIE Trunks: Make a selection Direction Inmode Intype Outmode Outtype Dialtone E&M Signal AnsSupvr Exit Disconnect	Select Intype or Outtype.	F2 F3

	Console Display/Instructions	Additional Information	PC
4	**Enter the tie trunk number.**		

	`**** Trunk Tyoe:`
	`Enter trunk for assignmt`
	
	`Backspace`
	`Exit  Enter`
		**** = option name selected in Step 3
		
		Dial or type:
		Trunk number [*nnn*]
		Slot and port number *[*sspp*]
		Logical ID number #[*nnn*].	

5	**Save your entry.**		
	Select **Enter**.		F10
6	**Specify the tie trunk type.**		

	`Trunk xxxx:`
	`Select ****  Trk type`
	`Wink`
	`Delay`
	`Immmed`
	`Auto  Next`
	`Exit  Enter`
		xxxx = trunk entered in Step 4
		**** = option name selected in Step 3
		
		Select **Wink**,
		Delay,
		Immed, or
		Auto.
			
			F1
			F2
			F3
			F4

7	**Continue to assign a type to another trunk or go to Step 8.**		
	Select **Next**.	Return to Step 6. The next trunk will be displayed on Line 1.	F9
8	**Save your entry.**		
	Select **Enter**.		F10
9	**Return to the System Programming Menu.**		
	Select **Exit** two times.		F5 F5

E&M Signal

Use this procedure to specify the type of tie trunk signal, as follows:

- E&M Mode
  - **1S.** Type 1 Standard. Tie trunks that are connected through the local telephone company.
  - **1C.** Type 1 Compatible. Tie trunks that are connected directly to a system that uses 1S signaling.
- Simplex Mode:
  - **5.** Type 5 Simplex. Tie trunks that are connected to a system using Type 5 signaling.

Summary: E&M Signal

Programmable by	System manager
Mode	All
Idle Condition	Tie trunk idle
Planning Form	Form 3c, Incoming Trunks: Tie
Factory Setting	1S
Valid Entries	1S, 1C, 5
Inspect	No
Copy Option	Yes
Console Procedure	LinesTrunks→TIE Lines→E&M Signal→Dial trunk no.→Enter→Specify signaling type→Enter→Exit→Exit
PC Procedure	F4→F2→F4→Type trunk no.→F10→Specify signaling type→F10→F5→F5

Procedure: E&M Signal

Console Display/Instructions	Additional Information	PC
1 Select the Lines and Trunks menu.		
System Programming: > Make a selection System Extensions SysRenumber Options Operator Tables LinesTrunks AuxEquip Exit NightSrvce		F4
2 Select Tie Lines.		
Lines and Trunks: > Make a selection LS/GS/DSL PRI TIE Lines Copy TT/LS Disc RemoteAccss DID Pools Exit Toll Type		F2
3 Select E&M Signal.		
TIE Trunks: Make a selection Direction Inmode Intype Outmode Outtype Dialtone E&M Signal AnsSupvr Exit Disconnect		F4

	Console Display/Instructions	Additional Information	PC
4	**Enter a tie trunk number.**		

	`E&M Signal:`
	`Enter trunk for assignmt`
	
	`Backspace`
	`Exit  Enter`
		Dial or type:
		Trunk number [*nnn*]
		Slot and port number ✱[*sspp*]
		Logical ID number #[*nnn*].	

5	**Save your entry.**		
	Select **Enter**.		F10
6	**Specify the type of signaling for the trunk.**		

	`Trunk xxx:`
	`Select E&M Trk Signaling`
	`Type1S`
	`Type1C`
	`Type5`
	`Next`
	`Exit  Enter`
		xxx = trunk entered in Step 4
		
		Select **Type1S**,
		Type1C, or
		Type5.
			
			F1
			F2
			F3

7	**Continue to assign E&M signaling to another trunk or go to Step 8.**		
	Select **Next**.	Return to Step 6. The next trunk will be displayed on Line 1.	F9
8	**Save your entry.**		
	Select **Enter**.		F10
9	**Return to the System Programming menu.**		
	Select **Exit** two times.		F5 F5

Dial Mode

Use this procedure to specify whether an incoming or outgoing tie trunk is touch-tone or rotary.

Touch-tone cannot be programmed for incoming immediate signaling tie trunks. Users of touch-tone single-line telephone users cannot make calls by using individual trunks programmed for rotary operation. The touch-tone signals generated from the telephone while dialing are transmitted to the central office at the same time the rotary signals are sent to the system. The central office receives both signals and cannot process the call.

Summary: Dial Mode

Programmable by	System manager
Mode	All
Idle Condition	Not required
Planning Form	Form 3c, Incoming Trunks: Tie
Factory Setting	Rotary
Valid Entries	Rotary, Touch-tone
Inspect	Yes
Copy Option	Yes
Console Procedure	To program a single line/trunk: LinesTrunks→TIE Lines→Inmode or Outmode→Entry Mode→Dial line/trunk no.→Enter or Delete→Exit→Exit →Exit To program a block of lines/trunks: LinesTrunks→TIE Lines→Inmode or Outmode→Select block of lines→Toggle LED On/Off→Exit→Exit→Exit
PC Procedure	To program a single line/trunk: [F4]→[F2]→[F6] or [F7]→[F6]→Type line/trunk no.→[F10] or [F8]→[F5]→[F5]→[F5] To program a block of lines/trunks: [F4]→[F2]→[F6] or [F7]→Select block of lines→Toggle letter G On/Off→[F5]→[F5]→[F5]

Procedure: Dial Mode

Console Display/Instructions	Additional Information	PC
1 Select the Lines and Trunks menu.		
System Programming: > Make a selection System Extensions SysRenumber Options Operator Tables LinesTrunks AuxEquip Exit NightSrvce		[F4]
2 Select Tie Lines.		
Lines and Trunks: > Make a selection LS/GS/DSL PRI TIE Lines Copy TT/LS Disc RemoteAccss DID Pools Exit Toll Type		[F2]

	Console Display/Instructions	Additional Information	PC
3	**Select Inmode signaling or Outmode signaling.**		
	TIE Trunks: Make a selection Direction Inmode Intype Outmode Outtype Dialtone E&M Signal AnsSupvr Exit Disconnect	Select **Inmode** or **Outmode**.	F6 F7
4	**Specify the line(s).**	● ◆	
	**** Trunk Dial: Enter trunk w/TouchTone Lines 01-20 Entry Mode Lines 21-40 Lines 41-60 Lines 61-80 Exit	**** = option name selected in Step 3 For a single line, go to ● Single Line Procedure. For a block of lines, go to ◆ Block Procedure.	

● Single Line Procedure

1	**Specify entry mode.**		
	Select **Entry Mode**.		F6
2	**Enter the number of the line/trunk.**		
	**** Trunk dial: Enter Trunks w/TouchTone Delete Backspace Exit Enter	**** = option name selected in Step 3 Dial or type [*nnn*].	
3	**Assign or remove touch-tone dial mode from the line/trunk.**		
	Select **Enter** or **Delete**.	You may continue to assign or remove touch-tone dial mode from additional lines/trunks by repeating Steps 2 and 3.	F10 F8
4	**Return to the System Programming menu.**		
	Select **Exit** three times.		F5 F5 F5

◆ Block Procedure

	Console Display/Instructions	Additional Information	PC
1	**Specify the block of 20 lines associated with the 20 line buttons on the system programming console.**		

	Select `Lines 01-20`
	`Lines 21-40`
	`Lines 41-60`
	`Lines 61-80`.
			F1
			F2
			F3
			F4

2	**Specify touch-tone or rotary signaling for each line/trunk.**		
		Toggle the green LED on or off as required. On = touch-tone. Off = rotary.	
3	**Return to the System Programming menu.**		
	Select `Exit` three times.		F5 F5 F5

Tie Trunk Dial Tone

Use this procedure to specify whether the system provides dial tone for people calling in on a tie trunk. Settings are remote (system provides dial tone) and local (system does not provide dial tone).

Summary: Tie Trunk Dial Tone

Programmable by	System manager
Mode	All
Idle Condition	Not required
Planning Form	Form 3c, Incoming Trunks: Tie
Factory Setting	Remote
Valid Entries	Remote, Local
Inspect	Yes
Copy Option	Yes

Console Procedure	To program a single line/trunk:
	`LinesTrunks`→`TIE Lines`→`Dialtone`→`Entry Mode`→Dial trunk no.→`Enter` or `Delete`→`Exit`→`Exit`→`Exit`
	To program a block of lines/trunks:
	`LinesTrunks`→`TIE Lines`→`Dialtone`→Select block of lines/trunks→Toggle LED On/Off→`Exit`→`Exit`→`Exit`

PC Procedure

To program a single line/trunk:
F4 → F2 → F8 → F6 → Type trunk no. → F10 or F8 → F5 → F5

To program a block of lines/trunks:
F4 → F2 → F8 → Select block of lines → Toggle letter G On/Off → F5 → F5 → F5

Procedure: Tie Trunk Dial Tone

	Console Display/Instructions	Additional Information	PC
1	**Select the Lines and Trunks menu.**		
	System Programming: > Make a selection System Extensions SysRenumber Options Operator Tables LinesTrunks AuxEquip Exit NightSrvce		F4
2	**Select Tie Lines.**		
	Lines and Trunks: > Make a selection LS/GS/DSL PRI TIE Lines Copy TT/LS Disc RemoteAccss DID Pools Exit Toll Type		F2
3	**Select Dial Tone.**		
	TIE Trunks: Make a selection Direction Inmode Intype Outmode Outtype Dialtone E&M Signal AnsSupvr Exit Disconnect		F8
4	**Specify the line(s).**	● ◆	
	**** Dial Tone: Enter trunk w/Remote Dial Lines 01-20 Entry Mode Lines 21-40 Lines 41-60 Lines 61-80 Exit	**** = option name selected in Step 3 For a single line, go to ● Single Line Procedure. For a block of lines, go to ◆ Block Procedure.	

● Single Line Procedure

	Console Display/Instructions	Additional Information	PC
1	**Specify entry mode.**		
	Select **Entry Mode**.		F6
2	**Enter the number of the trunk (*nnn*).**		
	OutTrunk Dial: Enter Trunks w/TouchTone Delete Backspace Exit Enter	Dial or type [*nnn*].	
3	**Assign or remove remote dial tone.**		
	Select **Enter** or **Delete**.		F10 F8
		You may continue to assign or remove remote dial tone from additional lines/trunks by repeating Steps 2 and 3.	
4	**Return to the System Programming menu.**		
	Select **Exit** three times.		F5 F5 F5

◆ Block Procedure

1	**Specify the block of 20 lines associated with the 20 buttons on the system programming console.**		
	Select **Lines 01-20** **Lines 21-40** **Lines 41-60** **Lines 61-80**.		F1 F2 F3 F4
2	**Specify remote or local dial signaling for each block.**		
		Toggle the green LED on or off as required. On = remote dial tone. Off = local dial tone.	
3	**Return to the System Programming menu.**		
	Select **Exit** three times.		F5 F5 F5

Tie Trunk Answer Supervision Time

Use this procedure to specify the tie trunk answer supervision time in milliseconds. This is the time limit for the called system to respond.

Summary: Tie Trunk Answer Supervision Time

Programmable by	System manager
Mode	All
Idle Condition	Not required
Planning Form	Form 3c, Incoming Trunks: Tie
Factory Setting	300 ms
Valid Entries	20 to 4800 ms, in increments of 20 ms
Inspect	No
Copy Option	Yes
Console Procedure	LinesTrunks→TIE Lines→AnsSupvr→Dial trunk no.→Enter→**Drop**→Dial no. of ms→Enter→Exit→Exit
PC Procedure	F4→F2→F9→Type trunk no.→F10→Alt + P→Type no. of ms→F10→F5→F5

Procedure: Tie Trunk Answer Supervision Time

	Console Display/Instructions	Additional Information	PC
1	**Select the Lines and Trunks menu.**		
	System Programming: > Make a selection System Extensions SysRenumber Options Operator Tables LinesTrunks AuxEquip Exit NightSrvce		F4
2	**Select Tie Lines.**		
	Lines and Trunks: >> Make a selection LS/GS/DSL PRI TIE Lines Copy TT/LS Disc RemoteAccss DID Pools Exit Toll Type		F2

	Console Display/Instructions	Additional Information	PC
3	**Select Answer Supervision.**		
	TIE Trunks: Make a selection Direction Inmode Intype Outmode Outtype Dialtone E&M Signal AnsSupvr Exit Disconnect		F9
4	**Enter a tie trunk number.**		
	Answer Supv: Enter trunk for assigmt Backspace Exit Enter	Dial or type: Trunk number [*nnn*] Slot and port number *[*sspp*] Logical ID number #[*nnn*].	↵
5	**Save your entry.**		
	Select **Enter**.		F10
6	**Erase the current number of milliseconds (*nnnn*).**		
	Trunk *xxxx*: Enter AnsSupervisionTime (20-4800, increment 20) *nnnn* Backspace Next Exit Enter	*xxxx* = trunk entered in Step 4 Press **Drop**.	Alt + P
7	**Enter the answer supervision time (*nnnn* = 0 to 4800 ms, increments of 20).**		
	Trunk *xxxx*: Enter AnsSupervisionTime (20-4800, increment 20) Backspace Next Exit Enter	*xxxx* = trunk entered in Step 4 Dial or type [*nnnn*].	↵
8	**Continue to assign the supervision time to another trunk or go to Step 9.**		
	Select **Next**.		F9
		Return to Step 6. The next trunk will be displayed on Line 1.	

	Console Display/Instructions	Additional Information	PC
9	**Save your entry.**		
	Select **Enter**.		F10
10	**Return to the System Programming menu.**		
	Select **Exit** two times.		F5 F5

Disconnect Time

Use this procedure to specify the tie trunk disconnect time limit in milliseconds.

Summary: Disconnect Time

Programmable by	System manager
Mode	All
Idle Condition	Not required
Planning Form	Form 3c, Incoming Trunks: Tie
Factory Setting	300 ms
Valid Entries	140 to 2400 ms
Inspect	No
Copy Option	Yes
Console Procedure	**LinesTrunks**→**TIE Lines**→**Disconnect**→Dial trunk no.→**Enter**→**Drop**→Dial no. of ms→**Enter**→**Exit**→**Exit**
PC Procedure	F4→F2→F10→Type trunk no.→F10→Alt + P→Type no. of ms→F10→F5→F5

Procedure: Disconnect Time

	Console Display/Instructions	Additional Information	PC
1	**Select the Lines and Trunks menu.**		
	System Programming: > Make a selection System Extensions SysRenumber Options Operator Tables LinesTrunks AuxEquip Exit NightSrvce		F4

	Console Display/Instructions	Additional Information	PC
2	**Select Tie Lines.**		
	Lines and Trunks: > Make a selection LS/GS/DSL PRI TIE Lines Copy TT/LS Disc RemoteAccss DID Pools Exit Toll Type		F2
3	**Select Disconnect.**		
	TIE Trunks: Make a selection Direction Inmode Intype Outmode Outtype Dialtone E&M Signal AnsSupvr Exit Disconnect		F10
4	**Enter the trunk number.**		
	Disconnect: Enter trunk for assignmt Backspace Exit Enter	Dial or type: Trunk number [*nnn*] Slot and port number *[*sspp*] Logical ID number #[*nnn*].	↵
5	**Save your entry.**		
	Select **Enter**.		F10
6	**Erase the current disconnect time (*nnnn*).**		
	Trunk *xxxx*: Enter Disconnect Time (140-2400) *nnnn* Backspace Next Exit Enter	*xxxx* = trunk entered in Step 4 Press **Drop**.	Alt + P
7	**Enter the disconnect time (*nnnn* = 140 to 2400 ms).**		
	Trunk *xxxx*: Enter Disconnect Time (140-2400) Backspace Next Exit Enter	*xxxx* = trunk entered in Step 4 Dial or type [*nnnn*].	↵

	Console Display/Instructions	Additional Information	PC
8	**Continue to assign the disconnect time to another trunk or go to Step 9.**		
	Select **Next**.		F9
		Return to Step 6. The next trunk will be displayed on Line 1.	
9	**Save your entry.**		
	Select **Enter**.		F10
10	**Return to the System Programming menu.**		
	Select **Exit** two times.		F5 F5

DID Trunks

This section covers programming DID trunks and includes procedures for the following:

- Block Assignment
- DID Trunk Type
- Disconnect Time
- Expected Digits
- Delete Digits
- Add Digits
- Signaling
- Invalid Destination

NOTE:
These procedures apply to Hybrid/PBX mode only.

Block Assignment

Use this procedure to assign each DID trunk connected to the system to either Block 1 or Block 2.

Summary: Block Assignment

Programmable by	System manager
Mode	Hybrid/PBX
Idle Condition	Not required
Planning Form	Form 3d, Incoming Trunks: DID
Factory Setting	Block 1
Valid Entries	Block 1, Block 2
Inspect	Yes
Copy Option	Yes

Console Procedure	To program a single line/trunk: LinesTrunks→DID→Block→Dial trunk block no.→Enter →Entry Mode→Type the line/trunk no.→Enter or Delete →Exit→Exit→Exit To program a block of lines/trunks: LinesTrunks→DID→Block→Dial trunk block no.→Enter →Select trunk lines→Toggle LED On/Off→Enter→ Exit→Exit→Exit
PC Procedure	To program a single line/trunk: F4→F4→F1→Type trunk block no.→F10→Type the line/trunk no.→F10 or F8→F5→F5→F5 To program a block of lines/trunks: F4→F4→F1→Type trunk block no.→F10→ Select trunk lines→Toggle letter G On/Off→F10→F5 →F5→F5

Procedure: Block Assignment

	Console Display/Instructions	Additional Information	PC
1	**Select the Lines and Trunks menu.**		
	System Programming: > Make a selection System Extensions SysRenumber Options Operator Tables LinesTrunks AuxEquip Exit NightSrvce		F4
2	**Select DID.**		
	Lines and Trunks: > Make a selection LS/GS/DSL PRI TIE Lines Copy TT/LS Disc RemoteAccss DID Pools Exit Toll Type		F4
3	**Select Block Assignment.**		
	Direct Inward Dial: Make a selection Block DeleteDigit Type Add Digits Disconnect Signaling ExpectDigit InvalDstn Exit		F1

	Console Display/Instructions	Additional Information	PC
4	**Enter the trunk block (*n* = 1 or 2).**		
	DID Block Assignment: Enter the block number (1-2) Backspace Exit Enter	Dial or type [*n*].	
5	**Save your entry.**		
	Select **Enter**.		F10
6	**Specify the line(s).**		
	Direct Inward Dialing: Assign lines to blocks Lines 01-20 Entry Mode Lines 21-40 Lines 41-60 Lines 61-80 Exit	For a single line, go to ● Single Line Procedure. For a block of lines, go to ◆ Block Procedure.	

● Single Line Procedure

1	**Specify entry mode.**		
	Select **Entry Mode**.		F6
2	**Enter the trunk number.**		
	Block x: Enter line/trunk number Delete Backspace Next Exit Enter	*x* = block entered in Step 4 Dial or type [*nnn*].	
3	**Assign or remove the trunk.**		
	Select **Enter** or **Delete**.	You may continue to assign or remove DID trunks from the block by repeating Steps 2 and 3.	F10 F8
4	**Continue to enter trunks for the other trunk block or go to Step 5.**		
	Select **Next**.	Return to Step 2. The block will be displayed on Line 1.	F9

	Console Display/Instructions	Additional Information	PC
5	**Save your entry.**		
	Select Enter.		F10
6	**Return to the System Programming menu.**		
	Select Exit three times.		F5 F5 F5

◆ Block Procedure

1	**Specify the DID trunks associated with 20 buttons on the system programming console.**		
	Select Lines 01-20 Lines 21-40 Lines 41-60 Lines 61-80.		F1 F2 F3 F4
2	**Assign or remove the trunk.**		
		Toggle the green LED on or off as required. On = assign DID trunk to block. Off = remove DID trunk from block.	
3	**Return to the System Programming menu.**		
	Select Exit three times.		F5 F5 F5

DID Trunk Type

Use this procedure to specify the DID trunk type as either immediate-start or wink-start. Wink-start is more reliable if the local telphone company supports it.

Summary: DID Trunk Type

Programmable by	System manager
Mode	Hybrid/PBX
Idle Condition	DID trunk idle
Planning Form	Form 3d, Incoming Trunks: DID
Factory Setting	Wink-start
Valid Entries	Immediate-start, Wink-start
Inspect	No
Copy Option	No
Console Procedure	LinesTrunks→DID→Type→Dial trunk block no.→Enter →Immed or Wink→Enter→Exit→Exit
PC Procedure	F4→F4→F2→Type trunk block no.→F10→F1 or F2 →F10→F5→F5

Procedure: DID Trunk Type

Console Display/Instructions	Additional Information	PC
1 Select the Lines and Trunks menu.		
System Programming: > Make a selection System Extensions SysRenumber Options Operator Tables LinesTrunks AuxEquip Exit NightSrvce		F4
2 Select DID.		
Lines and Trunks: > Make a selection LS/GS/DSL PRI TIE Lines Copy TT/LS Disc RemoteAccss DID Pools Exit Toll Type		F4
3 Select Type.		
Direct Inward Dial: Make a selection Block DeleteDigit Type Add Digits Disconnect Signaling ExpectDigit InvalDstn Exit		F2
4 Enter the trunk block (*n* = 1 or 2).		
DID Trunk Type: Enter block number (1-2) Backspace Exit Enter	Dial or type [*n*].	↵
5 Save your entry.		
Select **Enter**.		F10
6 Specify immediate-start or wink-start.		
DID Block *x*: Select type Immed Wink Next Exit Enter	*x* = block number entered in Step 4 Select **Immed** or **Wink**.	 F1 F2

	Console Display/Instructions	Additional Information	PC
7	**Continue to specify trunk type for the other trunk block or go to Step 8.**		
	Select **Next**.		F9
		Return to Step 6. The next trunk will be displayed on Line 1.	
8	**Save your entry.**		
	Select **Enter**.		F10
9	**Return to the System Programming menu.**		
	Select **Exit** two times.		F5 F5

Disconnect Time

Use this procedure to specify the DID trunk disconnect time limit in milliseconds.

Summary: Disconnect Time

Programmable by	System manager
Mode	Hybrid/PBX
Idle Condition	Not required
Planning Form	Form 3d, Incoming Trunks: DID
Factory Setting	500 ms
Valid Entries	10 to 2400 ms, in increments of 10 ms
Inspect	No
Copy Option	Yes
Console Procedure	LinesTrunks→DID→Disconnect→Dial trunk no.→Enter →**Drop**→Dial no. of ms→Enter→Exit→Exit
PC Procedure	F4→F4→F3→Type trunk no.→F10→Alt + P→Type no. of ms→F10→F5→F5

Procedure: Disconnect Time

	Console Display/Instructions	Additional Information	PC
1	**Select the Lines and Trunks menu.**		
	System Programming: > Make a selection System Extensions SysRenumber Options Operator Tables LinesTrunks AuxEquip Exit NightSrvce		F4

Console Display/Instructions	Additional Information	PC

2 Select DID.

```
Lines and Trunks:          >
Make a selection
LS/GS/DSL      PRI
TIE Lines      Copy
TT/LS Disc     RemoteAccss
DID            Pools
Exit           Toll Type
```

F4

3 Select Disconnect.

```
Direct Inward Dial:
Make a selection
Block          DeleteDigit
Type           Add Digits
Disconnect     Signaling
ExpectDigit    InvalDstn
Exit
```

F3

4 Enter the DID trunk.

```
DID Disconnect Time:
Enter the trunk number



Backspace
Exit           Enter
```

Dial or type:
Trunk number [*nnn*]
Slot and port number *[*sspp*]
Logical ID number #[*nnn*].

5 Save your entry.

Select **Enter**. F10

6 Erase the current disconnect time (*nnn*).

```
DID Trunk xxx:
Enter disconnect time
(10-2400,incrmnts 10)
nnn

Backspace      Next
Exit           Enter
```

xxx = trunk entered in Step 4

Press **Drop**. Alt + P

7 Enter the disconnect time in milliseconds (*nnn* = 10 to 2400 ms, in increments of 10).

Dial or type [*nnn*].

8 Continue to specify the disconnect time for another DID trunk or go to Step 9.

Select **Next**. F9

Return to Step 6. The next DID trunk will be displayed on Line 1.

	Console Display/Instructions	Additional Information	PC
9	**Save your entry.**		
	Select **Enter**.		F10
10	**Return to the System Programming menu.**		
	Select **Exit** two times.		F5 F5

Expected Digits

Use this procedure to tell the system how many digits are sent by the local telephone company.

Summary: Expected Digits

Programmable by	System manager
Mode	Hybrid/PBX
Idle Condition	Not required
Planning Form	Form 3d, Incoming Trunks: DID
Factory Setting	3 digits
Valid Entries	1 to 4 digits
Inspect	No
Copy Option	No
Console Procedure	**LinesTrunks**→**DID**→**ExpectDigit**→Dial trunk block no.→ **Enter**→**Drop**→Dial no. of digits→**Enter**→**Exit**→**Exit**
PC Procedure	F4→F4→F4→Type trunk block no.→F10→Alt + P→ Type no. of digits F10→F5→F5

Procedure: Expected Digits

	Console Display/Instructions	Additional Information	PC
1	**Select the Lines and Trunks menu.**		
	System Programming: > Make a selection System Extensions SysRenumber Options Operator Tables LinesTrunks AuxEquip Exit NightSrvce		F4

	Console Display/Instructions	Additional Information	PC
2	**Select DID.**		

	`Lines and Trunks: >`
	`Make a selection`
	`LS/GS/DSL  PRI`
	`TIE Lines  Copy`
	`TT/LS Disc  RemoteAccss`
	`DID  Pools`
	`Exit  Toll Type`
			F4

3	**Select Expected Digits.**		

	`Direct Inward Dial:`
	`Make a selection`
	`Block  DeleteDigit`
	`Type  Add Digits`
	`Disconnect  Signaling`
	`ExpectDigit  InvalDstn`
	`Exit`
			F4

4	**Enter the trunk block (*n* = 1 or 2).**		

	`DID Expected Digits:`
	`Enter block number (1-2)`
	
	`Backspace`
	`Exit  Enter`
		Dial or type [*n*].	

5	**Save your entry.**		
	Select **Enter**.		F10
6	**Erase the current number of expected digits (*n*).**		

	`DID Block x:`
	`Enter number of expected`
	`digits (1-4)`
	`n`
	
	`Backspace  Next`
	`Exit  Enter`
		x = block entered in Step 4
		
		Press **Drop**.
			Alt + P

7	**Enter the number of expected digits (*n* = 1 to 4).**		
		Dial or type [*n*].	
8	**Continue to specify expected digits for the other trunk block or go to Step 9.**		
	Select **Next**.		F9
		Return to Step 6. The next block will be displayed on Line 1.	

	Console Display/Instructions	Additional Information	PC
9	**Save your entry.**		
	Select **Enter**.		F10
10	**Return to the System Programming menu.**		
	Select **Exit** two times.		F5 F5

Delete Digits

Use this procedure to specify the number of leading digits to be deleted from the digits sent by the local telephone company. Use this procedure when the number of digits sent by the telephone company is greater than the number in the system numbering plan.

Summary: Delete Digits

Programmable by	System manager
Mode	Hybrid/PBX
Idle Condition	Not required
Planning Form	Form 3d, Incoming Trunks: DID
Factory Setting	0 digits
Valid Entries	0 to 4 digits
Inspect	No
Copy Option	No
Console Procedure	**LinesTrunks**→**DID**→**DeleteDigit**→Dial trunk block no.→ **Enter**→**Drop**→Dial no. of digits→**Enter**→**Exit**→**Exit**
PC Procedure	F4→F4→F6→Type trunk block no.→ Alt + P→Type no. of digits→F10→F5→F5

Procedure: Delete Digits

	Console Display/Instructions	Additional Information	PC
1	**Select the Lines and Trunks menu.**		
	System Programming: >		
	Make a selection		
	System Extensions		
	SysRenumber Options		
	Operator Tables		
	LinesTrunks AuxEquip		
	Exit NightSrvce		F4

	Console Display/Instructions	Additional Information	PC
2	**Select DID.**		
	Lines and Trunks: > Make a selection LS/GS/DSL PRI TIE Lines Copy TT/LS Disc RemoteAccss DID Pools Exit Toll Type		F4
3	**Select Delete Digit.**		
	Direct Inward Dial: Make a selection Block DeleteDigit Type Add Digits Disconnect Signaling ExpectDigit InvalDstn Exit		F6
4	**Enter the trunk block (*n* = 1 or 2).**		
	DID Delete Digits: Enter block number (1-2) Backspace Exit Enter	Dial or type [*n*].	
5	**Save your entry.**		
	Select **Enter**.		F10
6	**Erase the current number of delete digits (*n*).**		
	DID Block *x*: Enter number of digits to delete (0-4) *n* Backspace Next Exit Enter	*x* = block entered in Step 4 Press **Drop**.	Alt + P
7	**Enter the number of digits to delete (*n* = 0 to 4).**		
		Dial or type [*n*].	
8	**Continue to specify delete digits for the other trunk block or go to Step 9.**		
	Select **Next**.	Return to Step 6. The next block will be displayed on Line 1.	F9

	Console Display/Instructions	Additional Information	PC
9	**Save your entry.**		
	Select **Enter**.		F10
10	**Return to the System Programming menu.**		
	Select **Exit** two times.		F5 F5

Add Digits

Use this procedure to specify the number of leading digits that must be added to the digits sent by the local telephone company. Use this procedure when the number of digits sent by the telephone company is fewer than the number in the system numbering plan.

Summary: Add Digits

Programmable by	System manager
Mode	Hybrid/PBX
Idle Condition	Not required
Planning Form	Form 3d, Incoming Trunks: DID
Factory Setting	0
Valid Entries	1 to 9999
Inspect	No
Copy Option	No
Console Procedure	**LinesTrunks**→**DID**→**Add Digits**→Dial trunk block no.→ **Enter**→**Drop**→Dial added digits→**Enter**→**Exit**→**Exit**

Procedure: Add Digits

	Console Display/Instructions	Additional Information	PC
1	**Select the Lines and Trunks menu.**		
	System Programming: > Make a selection System Extensions SysRenumber Options Operator Tables LinesTrunks AuxEquip Exit NightSrvce		F4

	Console Display/Instructions	Additional Information	PC
2	**Select DID.**		

	`Lines and Trunks: >`
	`Make a selection`
	`LS/GS/DSL  PRI`
	`TIE Lines  Copy`
	`TT/LS Disc  RemoteAccss`
	`DID  Pools`
	`Exit  Toll Type`
			F4

3	**Select Add Digits.**		

	`Direct Inward Dial:`
	`Make a selection`
	`Block  DeleteDigit`
	`Type  Add Digits`
	`Disconnect  Signaling`
	`ExpectDigit  InvalDstn`
	`Exit`
			F7

4	**Enter the trunk block (*n* = 1 or 2).**		

	`DID Add Digits:`
	`Enter block number (1-2)`
	
	`Backspace`
	`Exit  Enter`
		Dial or type [*n*].	

5	**Save your entry.**		
	Select **Enter**.		F10
6	**Erase the current number of added digits (*nnn*).**		

	`DID Block x:`
	`Enter digits to add`
	
	`nnn`
	
	`Backspace  Next`
	`Exit  Enter`
		x = block entered in Step 4
		
		Press **Drop**.
			Alt + P

7	**Enter the number of digits to add (*n* = 1 to 9999).**		
		Dial or type [*n*].	
8	**Continue to specify added digits for the other trunk block or go to Step 9.**		
	Select **Next**.		F9
		Return to Step 6. The next block will be displayed on Line 1.	

	Console Display/Instructions	Additional Information	PC
9	**Save your entry.**		
	Select **Enter**.		F10
10	**Return to the System Programming menu.**		
	Select **Exit** two times.		F5 F5

Signaling

Use this procedure to specify whether the type of dialing signal from the local telephone company is touch-tone or rotary. Touch-tone dial mode cannot be programmed for immediate-start DID trunks.

Touch-tone single-line telephone users cannot make calls by using individual trunks programmed for rotary operation. The touch-tone signals generated from the telephone while dialing are transmitted to the central office at the same time the rotary signals are sent to the system. The central office receives both signals and cannot process the call.

Summary: Signaling

Programmable by	System manager
Mode	Hybrid/PBX
Idle Condition	Not Required
Planning Form	Form 3d, Incoming Trunks: DID
Factory Setting	Rotary
Valid Entries	Rotary, Touch-tone
Inspect	No
Copy Option	No
Console Procedure	**LinesTrunks**→**DID**→**Signaling**→Dial trunk block no.→ **Enter**→**Rotary** or **TouchTone**→**Enter**→**Exit**→**Exit**
PC Procedure	F4→F4→F8→Type trunk block no.→F10→F1 or F2 →F10→F5→F5

Procedure: Signaling

	Console Display/Instructions	Additional Information	PC
1	**Select the Lines and Trunks menu.**		
	System Programming: > Make a selection System Extensions SysRenumber Options Operator Tables LinesTrunks AuxEquip Exit NightSrvce		F4
2	**Select DID.**		
	Lines and Trunks: > Make a selection LS/GS/DSL PRI TIE Lines Copy TT/LS Disc RemoteAccss DID Pools Exit Toll Type		F4
3	**Select Signaling.**		
	Direct Inward Dial: Make a selection Block DeleteDigit Type Add Digits Disconnect Signaling ExpectDigit InvalDstn Exit		F8
4	**Enter the trunk block (*n* = 1 or 2).**		
	DID Signaling Enter Block number (1-2) Backspace Exit Enter	Dial or type [*n*].	↵
5	**Save your entry.**		
	Select **Enter**.		F10
6	**Specify Rotary or Touch Tone.**		
	DID Block *x*: Select one Rotary Touch Tone Next Exit Enter	*x* = block entered in Step 4 Select **Rotary** or **TouchTone**.	F1 F2

	Console Display/Instructions	Additional Information	PC
7	**Continue to specify type for the other trunk block or go to Step 8.**		
	Select **Next**.		F9
		Return to Step 6. The next block will be displayed on Line 1.	
8	**Save your entry.**		
	Select **Enter**.		F10
9	**Return to the System Programming menu.**		
	Select **Exit** two times.		F5 F5

Invalid Destination

Use this procedure to specify where to direct outside calls (received on DID trunks) for unassigned extension numbers. Calls can be directed to a backup position (normally the primary system operator) or given a fast busy signal. See "QCC Operator to Receive Call Types" in Chapter 3 for information on assigning a backup position.

Summary: Invalid Destination

Programmable by	System manager
Mode	Hybrid/PBX
Idle Condition	Not required
Planning Form	Form 3d, incoming Trunks: DID
Factory Setting	Backup (calls are sent to the primary system operator)
Valid Entries	Backup, Fast Busy
Inspect	No
Copy Option	No
Console Procedure	**LinesTrunks→DID→InvalDstn→Send to Backup Extension** or **Return Fast Busy→Enter→Exit→Exit**
PC Procedure	F4→F4→F9→F1 or F2→F10→F5→F5

Procedure: Invalid Destination

	Console Display/Instructions	Additional Information	PC
1	**Select the Lines and Trunks menu.**		
	System Programming: > Make a selection System Extensions SysRenumber Options Operator Tables LinesTrunks AuxEquip Exit NightSrvce		F4
2	**Select DID.**		
	Lines and Trunks: > Make a selection LS/GS/DSL PRI TIE Lines Copy TT/LS Disc RemoteAccss DID Pools Exit Toll Type		F4
3	**Select Invalid Destination.**		
	Direct Inward Dial: Make a selection Block DeleteDigit Type Add Digits Disconnect Signaling ExpectDigit InvalDstn Exit		F9
4	**Specify how to handle calls directed to an invalid destination.**		
	Invalid Destination DID: Select one Send to Backup Extension Return Fast Busy Exit Enter	Select **Send to Backup Extension** or **Return Fast Busy**.	F1 F2
5	**Save your entry.**		
	Select **Enter**.		F10
6	**Return to the System Programming menu.**		
	Select **Exit** two times.		F5 F5

PRI Facilities

The procedures in this section provide the steps for programming the following options for Primary Rate Interface (PRI) facilities connected to a 100D (DS1) module:

- Telephone Number
- B-Channel Groups
- Network Service
- Copy Telephone Number to Send
- Incoming Routing
- Telephone Number to Send
- Test Telephone Number
- Timers and Counters
- Terminal Equipment Identifier
- Dial Plan Routing
- Outgoing Tables
- Network Selection Tables
- Special Services Tables
- Call-by-Call Service Table

NOTE:
If you are adding PRI facilities to an existing system, certain vaues must be set correctly. To inspect or change these values, see “DS1 Facilities.” Do not start these procedures until you have checked the following:

- Type of DS1 Facility must be set to PRI.
- Frame format must be specified correctly.
- Zero code suppression must be specified correctly.
- Clock synchronization source must be set to loop (derived from the T1 line).

The settings for frame format and zero-code suppression must be consistent with the options selected when the PRI connection was ordered.

If you are using ARS in connection with PRI, make sure you select voice, data, or voice and data, as appropriate, when you perform the ARS “Voice and/or Data Routing” procedure found in “Automatic Route Selection.”

Telephone Number

Use this procedure to assign a string of up to 12 digits to each PRI channel. This string must match the number sent by the network (that is, the number provided by the PRI service provider) to indicate the number dialed by an outside caller. The system uses this number to route the call to the correct destination, which means that the number assigned to each channel in the same B-channel group must be unique. Note also that the number cannot be the same as the associated test telephone number.

Summary: Telephone Number

Programmable by	System manager
Mode	Hybrid/PBX, Key
Idle Condition	Not required
Planning Form	Form 3b, Incoming Trunks: DS1 Connectivity (100D module)
Factory Setting	No digits
Valid Entries	Up to 12 digits (any combination of 0 to 9)
Inspect	No
Copy Option	No
Console Procedure	LinesTrunks→PRI→PhoneNumber→Dial trunk no.→Enter →**Drop**→Dial telephone no.→Enter→Exit→Exit
PC Procedure	F4→F6→F1→Type trunk no.→F10→Alt + P→Type telephone no.→F10→F5→F5

Procedure: Telephone Number

Console Display/Instructions	Additional Information	PC
1 Select the Lines and Trunks menu.		
System Programming: > Make a selection System Extensions SysRenumber Options Operator Tables LinesTrunks AuxEquip Exit NightSrvce		F4

	Console Display/Instructions	Additional Information	PC
2	**Select PRI.**		

	`Lines and Trunks: >`
	`Make a selection`
	`LS/GS/DSL PRI`
	`TIE Lines Copy`
	`TT/LS Disc RemoteAccss`
	`DID Pools`
	`Exit Toll Type`
			F6

3	**Select Phone Number.**		

	`PRI Lines:`
	`Make a selection`
	`PhoneNumber Protocol`
	`B-ChannlGrp DialPlanRtg`
	`NumbrToSend OutgoingTbl`
	`Test TelNum`
	`Exit`
			F1

4	**Enter the line number.**		

	`PRI Phone Number:`
	`Enter line number`
	`Backspace`
	`Exit Enter`
		Dial or type:
		Trunk number [*nnn*]
		Slot and port number *[*sspp*]
		Logical ID number #[*nnn*].	

5	**Save your entry.**		
	Select **Enter**.		F10
6	**Erase the current telephone number (*N*) if one is assigned.**		

	`Line xxxx:`
	`Enter phone number`
	`N`
	`Backspace Next`
	`Exit Enter`
		xxxx = line number entered in Step 4
		Press **Drop**.
			Alt + P

7	**Enter a telephone number of up to 12 digits to be assigned to the channel (*N* = any combination of 0 to 9).**		
		Dial or type [N].	
8	**Continue to assign the telephone number to another PRI channel or go to Step 9.**		
	Select **Next**.		F9
		Return to Step 6. The next PRI Channel will be displayed on Line 1.	

	Console Display/Instructions	Additional Information	PC
9	**Save your entry.**		
	Select `Enter`.		F10
10	**Return to the System Programming menu.**		
	Select `Exit` two times.		F5 F5

B-Channel Groups

Use this procedure to perform the following:

- Assign B-channels to a group.
- Associate individual ISDN channels (that can place and receive calls) on the B-channels in each group.

B-channels are partitioned into trunk groups when PRI service is ordered. The trunk groups defined when service is ordered must match the B-channel groups defined when MERLIN LEGEND is programmed.

Each B-channel can be assigned to only one group, and each ISDN channel can be associated with only one group. Up to 80 B-channel groups can be established.

Each group can contain up to 23 channels; however, all channels assigned must signal through the same D-channel (that is, must be connected to the same 100D module).

B-channels must be assigned in the order of system search (through the group) for an available channel. To minimize call attempts on the same line or trunk, arrange B-channels in the opposite order of the hunting arrangement provided by the network service provider.

B-channels must be identified by control unit slot and port numbers since they are not associated with a line/trunk number or a logical ID.

PRI B-channel groups programmed for line routing perform similarly to loop-start trunks. PRI B-channel groups programmed for dial plan routing perform similarly to DID trunks.

NOTE:
If more lines than B-channels are assigned to a B-channel group, users may experience situations where a line that is idle is not able to seize a B-channel. The user will receive a fast busy tone.

Summary: B-Channel Groups

Programmable by	System manager
Mode	Hybrid/PBX, Key
Idle Condition	Not required
Planning Form	Form 3b, Incoming Trunks: DS1 Connectivity (100D module)
Factory Setting	Not applicable
Valid Entries	Group numbers (1 to 80)
Inspect	Yes
Copy Option	No
Console Procedure	To program a single line/trunk: LinesTrunks→PRI→B-ChannlGrp→B Channels→Dial group no.→Enter→Dial B-channel slot and port nos.→Enter→Lines→Dial group no.→Enter→Entry Mode→Dial line/trunk no.→Enter→Exit→Exit→Exit To program a block of lines/trunks: LinesTrunks→PRI→B-ChannlGrp→B Channels→Dial group no.→Enter→Dial B-channel slot and port no.→Enter→Lines→Dial group no.→Enter→Select specific lines/trunks→Toggle LED On/Off→Exit→Exit→Exit
PC Procedure	To program a single line/trunk: [F4]→[F6]→[F2]→[F1]→Type group no.→Type B-channel slot and port nos.→[F5]→Type group no.→[F10]→[F6]→Type line/trunk no.→[F10]→[F5]→[F5]→[F5] To program a block of lines/trunks: [F4]→[F6]→[F2]→[F1]→Type group no.→Type B-channel slot and port nos.→[F5]→Type group no.→[F10]→Select specific lines/trunks→Toggle letter G On/Off→[F5]→[F5]→[F5]

Procedure: B-Channel Groups

	Console Display/Instructions	Additional Information	PC
1	**Select the Lines and Trunks menu.**		
	System Programming: > Make a selection System Extensions SysRenumber Options Operator Tables LinesTrunks AuxEquip Exit NightSrvce		[F4]

	Console Display/Instructions	Additional Information	PC
2	**Select PRI.**		
	Lines and Trunks: > Make a selection LS/GS/DSL PRI TIE Lines Copy TT/LS Disc RemoteAccss DID Pools Exit Toll Type		F6
3	**Select B-Channel Groups.**		
	PRI Lines: Make a selection PhoneNumber Protocol B-ChannlGrp DialPlanRtg NumbrToSend OutgoingTbl Test TelNum Exit		F2
4	**Select B-Channels.**		
	B-Channel Groups: Make a selection B Channels IncomingRtg Lines NetworkServ Copy Number Exit		F1
5	**Enter the B-channel group number (*nn* = 1 to 80).**		
	B-Channel Groups: Enter group number Backspace Exit Enter	Dial or type [*nn*].	
6	**Save your entry.**		
	Select **Enter**.		F10
7	**Enter the B-channel slot and port number.**		
	B Channel Group *xx*: Enter B-Channel Delete Backspace Next Exit Enter	*xx* = number entered in Step 5 Dial or type *[*sspp*].	

	Console Display/Instructions	Additional Information	PC
8	**Assign or remove the B-channel from the group.**		
	Select **Enter** or		F10
	Delete.		F8
		You may continue to assign or remove additional B-channels from the group by repeating Steps 7 and 8.	
9	**Continue to assign B-channels to another group or go to Step 10.**		
	Select **Next**.		F9
		Return to Step 7. The next group will be displayed on Line 1.	
10	**Save your entry.**		
	Select **Enter**.		F10
11	**Select Lines.**		
	B-Channel Groups: Make a selection B Channels IncomingRtg Lines NetworkServ Copy Number Exit		F2
12	**Enter the B-channel group number (*nn* = 1 to 80).**		
	B-Channel Groups: Enter group number Backspace Exit Enter	Dial or type [*nn*].	
13	**Save your entry.**		
	Select **Enter**.		F10
14	**Specify the line(s).**	● ◆	
	B-Channel Group *xx*: Assign lines Lines 01-20 Entry Mode Lines 21-40 Lines 41-60 Lines 61-80 Exit	*xx* = number entered in Step 12 To select a single line, go to ● Single Line Procedure. To select a block of lines, go to ◆ Block Procedure.	

● Single Line Procedure

	Console Display/Instructions	Additional Information	PC
1	**Specify entry mode.**		
	Select **Entry Mode**.		F6
2	**Enter a line number.**		
	B-Channel Group *xx*: Enter line number Delete Backspace Next Exit Enter	*xx* = number entered in Step 12 Dial or type [*nnn*].	⮌
3	**Assign or remove the line number from the B-channel group.**		
	Select **Enter** or **Delete**.	You may continue to assign or remove additional lines from the B-Channel group by repeating Steps 7 and 8.	F10 F8
4	**Continue to assign the line number to another B-channel group or go to Step 5.**		
	Select **Next**.	Return to Step 2. The next group will be displayed on Line 1.	F9
5	**Save your entry.**		
	Select **Enter**.		F10
6	**Return to the System Programming menu.**		
	Select **Exit** three times.		F5 F5 F5

◆ Block Procedure

1	**Specify the block of 20 lines associated with 20 buttons on the system programming console.**		
	Select **Lines 01-20** **Lines 21-40** **Lines 41-60** **Lines 61-80**.		F1 F2 F3 F4
2	**Assign the line(s) to the B-channel group.**		
		Toggle the green LED on or off as required. On = lines are assigned to B-channel. Off = lines are not assigned to B-channel.	
3	**Return to the System Programming menu.**		
	Select **Exit** three times.		F5 F5 F5

Network Service

Use this procedure to specify the type of outgoing service provided by each B-channel group [Megacom WATS and 800, MultiQuest® Service, ACCUNET® Switched Digital Service (SDS), or Software Defined Network (SDN)].

NOTE:
You can enter a service not shown on the Network Service screen by using the five-digit binary code that represents the service in the Network Facilities Information Element of ISDN PRI signaling protocol. For information on these codes, contact your service provider. See “Miscellaneous Procedure.”

Summary: Network Service

Programmable by	System manager
Mode	Hybrid/PBX, Key
Idle Condition	Not required
Planning Form	Form 3b, Incoming Trunks: DS1 Connectivity (100D module)
Factory Setting	Not applicable
Valid Entries	AT&T Toll, Local, Miscellaneous
Inspect	No
Copy Option	No
Console Procedure	LinesTrunks→PRI→B-ChannlGrp→NetworkServ→Dial group no.→Enter→Specify network service→Enter→Exit→Exit→Exit→Exit
PC Procedure	F4→F6→F2→F3→Type group no.→F10→Specify network service→F10→F5→F5→F5→F5

Procedure: Network Service

	Console Display/Instructions	Additional Information	PC
1	**Select the Lines and Trunks menu.**		
	System Programming: > Make a selection System Extensions SysRenumber Options Operator Tables LinesTrunks AuxEquip Exit NightSrvce		F4

	Console Display/Instructions	Additional Information	PC
2	**Select PRI.**		
	Lines and Trunks: > Make a selection LS/GS/DSL PRI TIE Lines Copy TT/LS Disc RemoteAccss DID Pools Exit Toll Type		F6
3	**Select B-Channel Groups.**		
	PRI Lines: Make a selection PhoneNumber Protocol B-ChannlGrp DialPlanRtg NumbrToSend OutgoingTbl Test TelNum Exit		F2
4	**Select Network Service.**		
	B-Channel Groups: Make a selection B Channels IncomingRtg Lines NetworkServ Copy Number Exit		F3
5	**Enter the B-channel group number (*nn* = 1 to 80).**		
	B-Channel Groups: Enter group number Backspace Exit Enter	Dial or type [*nn*].	
6	**Save your entry.**		
	Select **Enter**.		F10

	Console Display/Instructions	Additional Information	PC
7	**Specify a network service.**	● ◆ ■	
	Network Services: Make a selection AT&T Toll Local Misc Exit	If you select **AT&T Toll**, go to ● AT&T Toll Procedure. If you select **Local**, go to ◆ Local Procedure. If you select **Misc**, go to ■ Miscellaneous Procedure.	 F1 F2 F3

● AT&T Toll Procedure

1	**Specify a service.**		
	B-Channel Group *xx*: Select one MegacomWATS MULTIQUEST ACCUNET SDS LongDistnce SoftDefNetw Megacom 800 Exit Enter	*xx* = number entered in Step 5 Press the button or function key next to your selection.	 ⊖
2	**Save your entry.**		
	Select **Enter**.		F10
3	**Repeat Step 5 through 7 of the main procedure for each toll group number.**		
4	**Return to the System Programming menu.**		
	Select **Exit** four times.		F5 F5 F5 F5

◆ Local Procedure

1	**Specify a service.**		
	B-Channel Group *xx*: Select one OUTWATS 56/64 Digtl VirtPrivNet INWATS Exit Enter	*xx* = number entered in Step 5 Press the button or function key next to your selection.	 ⊖
2	**Save your entry.**		
	Select **Enter**.		F10
3	**Repeat Steps 5 through 7 of the main procedure for each local group number.**		
4	**Return to the System Programming menu.**		
	Select **Exit** four times.		F5 F5 F5 F5

■ Miscellaneous Procedure

	Console Display/Instructions	Additional Information	PC
1	**Specify a service.**		
	B-Channel Group *xx*: Select one Other CallByCall Exit Enter	*xx* = number entered in Step 5 If you select CallByCall, you have finished this procedure. Go to Step 7 Select Other or CallByCall.	F1 F2
2	**Save your entry.**		
	Select Enter.		F10
3	**Erase the current network service code.**		
	B-Channel Group *xx*: Enter Network Service (5 digit code of 0,1) *nnnnn* Backspace Exit Enter	*xx* = group number entered in Step 5 Select **Drop**.	Alt + P
4	**Enter the five-digit network code that corresponds to the selected service.**		
		Dial or type [*nnnnn*].	
5	**Save your entry.**		
	Select Enter.		F10
6	**Repeat Steps 5 through 7 of the main procedure for each miscellaneous service group number.**		
7	**Return to the System Programming menu.**		
	Select Exit four times.		F5 F5 F5 F5

Copy Telephone Number to Send

Use this procedure to indicate whether or not the telephone number to send to the network (for calls going out over ISDN lines assigned to a B-channel group) is copied from the number assigned to that channel.

Select Do Not Copy Phone Number when a telephone number to send is assigned to each channel in the B-channel group or when no telephone number is to be sent to the network. In the latter case, make sure that there are no telephone numbers assigned to any channels in the B-channel group by using the “Telephone Number to Send” procedure.

Summary: Copy Telephone Number to Send

Programmable by	System manager
Mode	Hybrid/PBX, Key
Idle Condition	Not required
Planning Form	Form 3b, Incoming Trunks: DS1 Connectivity
Factory Setting	Do not copy
Valid Entries	Do not copy, Copy
Inspect	No
Copy Option	No
Console Procedure	LinesTrunks→PRI→B ChannlGrp→Copy Number→Dial group no.→Enter→Specify copy or no copy→Enter→Exit→Exit→Exit
PC Procedure	F4→F6→F2→F4→Type group no.→F10→Specify copy or no copy→F10→F5→F5→F5

Procedure: Copy Telephone Number to Send

	Console Display/Instructions	Additional Information	PC
1	**Select the Lines and Trunks menu.**		
	System Programming: > Make a selection System Extensions SysRenumber Options Operator Tables LinesTrunks AuxEquip Exit NightSrvce		F4
2	**Select PRI.**		
	Lines and Trunks: > Make a selection LS/GS/DSL PRI TIE Lines Copy TT/LS Disc RemoteAccss DID Pools Exit Toll Type		F6
3	**Select B-Channel Groups.**		
	PRI Lines: Make a selection PhoneNumber Protocol B-ChannlGrp DialPlanRtg NumbrToSend OutgoingTbl Test TelNum Exit		F2

	Console Display/Instructions	Additional Information	PC
4	**Select Copy Number.**		
	B-Channel Groups: Make a selection B Channels IncomingRtg Lines NetworkServ Copy Number Exit		F4
5	**Enter the B-channel group number (*nn* = 1 to 80).**		
	B-Channel Groups: Enter group number Backspace Exit Enter	Dial or type [*nn*].	
6	**Save your entry.**		
	Select **Enter**.		F10
7	**Specify whether or not the telephone number assigned to the channel is copied as the number to send to the network.**		
	B-Channel Group *xx*: Select one Copy PhnNum to NumToSend Do not Copy Phone Number Next Exit Enter	*xx* = number entered in Step 5 Select **Copy PhnNum to NumToSend** or **Do not Copy Phone Number**.	F1 F2
8	**Continue to assign the copy option to another B-channel group or go to Step 9.**		
	Select **Next**.	Return to Step 7. The next group will be displayed on Line 1.	F9
9	**Save your entry.**		
	Select **Enter**.		F10
10	**Return to the System Programming menu.**		
	Select **Exit** three times.		F5 F5 F5

Incoming Routing

Use this procedure to specify whether incoming routing is by line appearance or according to dial plan. Dial Plan Routing is available in Hybrid/PBX mode only.

Summary: Incoming Routing

Programmable by	System manager
Mode	Line appearance: Hybrid/PBX, Key; Dial Plan Routing: Hybrid/PBX only
Idle Condition	Not required
Planning Form	Form 3b, Incoming Trunks: DS1 Connectivity (100D module)
Factory Setting	Line appearance
Valid Entries	Dial Plan Routing, Routing by Line Appearance
Inspect	No
Copy Option	No
Console Procedure	LinesTrunks→PRI→B-ChannlGrp→Incoming Rtg→Dial B-channel group no.→Enter→Specify method of routing →Enter→Exit→Exit→Exit
PC Procedure	F4→F6→F2→F6→Type B-channel group no.→F10 →Specify method of routing→F10→F5→F5→F5

Procedure: Incoming Routing

Console Display/Instructions	Additional Information	PC
1 Select the Lines and Trunks menu.		
System Programming: > Make a selection System Extensions SysRenumber Options Operator Tables LinesTrunks AuxEquip Exit NightSrvce		F4
2 Select PRI.		
Lines and Trunks: > Make a selection LS/GS/DSL PRI TIE Lines Copy TT/LS Disc RemoteAccss DID Pools Exit Toll Type		F6

	Console Display/Instructions	Additional Information	PC
3	**Select B-Channel Groups.**		
	PRI Lines: Make a selection PhoneNumber Protocol B-ChannlGrp DialPlanRtg NumbrToSend OutgoingTbl Test TelNum Exit		F2
4	**Select Incoming Routing.**		
	B-Channel Groups: Make a selection B Channels IncomingRtg Lines NetworkServ Copy Number Exit		F6
5	**Enter the B-channel group number (*nn* = 1 to 80).**		
	PRI Incoming Routing: Enter group number Backspace Exit Enter	Dial or type [*nn*].	
6	**Save your entry.**		
	Select **Enter**.		F10
7	**Specify the routing method to use for incoming calls.**		
	B-Channel Group *xx*: Select one Routing by Dial Plan Route by Line Appearance Next Exit Enter	*xx* = group number entered in Step 5 Select **Routing by Dial Plan** or **Route by Line Appearance**.	F1 F2
8	**Continue to assign the routing method to another B-channel group or go to Step 9.**		
	Select **Next**.	Return to Step 7. The next group will be displayed on Line 1.	F9

	Console Display/Instructions	Additional Information	PC
9	**Save your entry.**		
	Select `Enter`.		F10
10	**Return to the System Programming menu.**		
	Select `Exit` three times.		F5 F5 F5

Telephone Number to Send

Use this procedure to assign the telephone number to send to the network when outgoing calls are made on an ISDN line. If the person being called subscribes to an automatic number identification service, the number indicates who is calling.

The number assigned to each channel does not have to be unique because it is not used for routing.

The telephone number sent to the network can be the one of the following:

- The extension number assigned to the calling telephone (Select `Extension Only` in Step 4)
- The extension number substituted into the lower order digits of a system-wide base number (Select `Base Number with Ext` in Step 4)
- The facility-based line telephone number (Select `Line Telephone Number` in Step 4)

NOTE:
Only one base number is supported per system. In systems having non-uniform extension numbers, for example, where there are some 3-digit extension numbers and some 4-digit extension numbers, one base number may not be sufficient to represent all the external telephone numbers of all extensions.

Summary: Telephone Number to Send

Programmable by	System manager
Mode	All
Idle Condition	Not required
Planning Form	Form 3b, Incoming Trunks: DS1 Connectivity (100D module)
Factory Setting	No digits are assigned
Valid Entries	Up to 12 digits (any combination of 0 to 9)
Inspect	No
Copy Option	No

Console Procedure	LinesTrunks→PRI→NumbrToSend→Specify type of no.→ Enter→**Drop**→Dial base no.→Enter→Dial line no.→ Enter→**Drop**→Dial telephone no.→Enter→Exit→Exit
PC Procedure	F4→F6→F3→Specify type of no.→F10→Alt + P→ Type base no.→F10→Alt + P→Type telephone no.→ F10→F5→F5

Procedure: Telephone Number to Send

	Console Display/Instructions	Additional Information	PC
1	**Select the Lines and Trunks menu.**		
	System Programming: > Make a selection System Extensions SysRenumber Options Operator Tables LinesTrunks AuxEquip Exit NightSrvce		F4
2	**Select PRI.**		
	Lines and Trunks: > Make a selection LS/GS/DSL PRI TIE Lines Copy TT/LS Disc RemoteAccss DID Pools Exit Toll Type		F6
3	**Select Number to Send.**		
	PRI Lines: Make a selection PhoneNumber Protocol B-ChannlGrp DialPlanRtg NumbrToSend OutgoingTbl Test TelNum Exit		F3

	Console Display/Instructions	Additional Information	PC
4	**Specify the type of number to send.**	● ◆	

	`Phone Number to Send:`
	`Make a selection`
	`(for entire system)`
	`Extension Only`
	`Base Number with Ext.`
	`Line Telephone Number`
	`Exit  Enter`
		If you select **Extension Only**, continue with Step 5.	F1

		If you select **Base Number with Ext.**, go to ● Base Number with Extension. Procedure.	F2
		If you select **Line Telephone Number**, go to ◆ Line Telephone Number Procedure.	F3

● Base Number with Extension Procedure

1	**Erase the current base number (*N*).**		

	`Base Number with Ext.:`
	`Enter max of 12 digit`
	`base telephone number`
	`N`
	
	`Backspace`
	`Exit  Enter`
		Press **Drop**.	Alt + P

2	**Enter a base telephone number of up to 12 digits (*N* = any combination of 0 to 9).**		
		Dial or type [*N*].	↵
3	**Save your entry.**		
	Select **Enter**.		F10
4	**Return to the System Programming menu.**		
	Select **Exit** two times.		F5 F5

● Line Telephone Number Procedure

1	**Enter the line number (*nnn*).**		

	`Phone Number to Send:`
	`Enter line number`
	
	`Backspace`
	`Exit  Enter`
		Dial or type [*nnn*].	↵

	Console Display/Instructions	Additional Information	PC
2	**Save your entry.**		
	Select **Enter**.		F10
3	**Erase the current telephone number (*n*).**		
	Line *xxx*: Enter phone number to send on outgoing calls *N* Backspace Next Exit Enter	*xxx* = line entered in Step 1 Press **Drop**.	Alt + P
4	**Enter a telephone number of up to 12 digits to send (*N* = any combination of 0 to 9).**		
		Dial or type [*N*].	
5	**Continue to assign the telephone number to another line or go to Step 6.**		
	Select **Next**.	Return to Step 3. The next line will be displayed on Line 1.	F9
6	**Save your entry.**		
	Select **Enter**.		F10
7	**Return to the System Programming menu.**		
	Select **Exit** two times.		F5 F5

Test Telephone Number

Use this procedure to assign a test line or trunk telephone number for each 100D module installed in the control unit.

The number assigned to the test line/trunk must be different from the numbers assigned to other channels in the same B-channel group. It must be the same number as that provided by the PRI service provider.

Summary: Test Telephone Number

Programmable by	System manager
Mode	Hybrid/PBX, Key
Idle Condition	Not required
Planning Form	Form 3b, Incoming Trunks: DS1 Connectivity (100D module)
Factory Setting	Not applicable
Valid Entries	Telephone number of up to 12 digits

Inspect	No
Copy Option	No
Console Procedure	LinesTrunks→PRI→Test TelNum→Dial slot no.→Enter →**Drop**→Dial telephone no.→Enter→Exit→Exit
PC Procedure	F4 → F6 → F4 →Type slot no.→F10→Alt + P →Type telephone no.→F10→F5→F5

Procedure: Test Telephone Number

	Console Display/Instructions	Additional Information	PC
1	**Select the Lines and Trunks menu.**		
	System Programming: > Make a selection System Extensions SysRenumber Options Operator Tables LinesTrunks AuxEquip Exit NightSrvce		F4
2	**Select PRI.**		
	Lines and Trunks: > Make a selection LS/GS/DSL PRI TIE Lines Copy TT/LS Disc RemoteAccss DID Pools Exit Toll Type		F6
3	**Select Test Telephone Number.**		
	PRI Lines: Make a selection PhoneNumber Protocol B-ChannlGrp DialPlanRtg NumbrToSend OutgoingTbl Test TelNum Exit		F4
4	**Enter the slot number in the control unit that contains the 100D module (*nn* = 1 to 17).**		
	PRI Test Telephone Num: Enter slot number (1-17) Backspace Exit Enter	Dial or type [*nn*].	

	Console Display/Instructions	Additional Information	PC
5	**Save your entry.**		
	Select **Enter**.		F10
6	**Erase the current test telephone number (*N*).**		
	Slot *xx* Test Tel Number: Enter test number *N* Backspace Next Exit Enter	*xx* = number entered in Step 4	
		Press **Drop**.	Alt + P
7	**Enter a telephone number of up to 12 digits to be assigned as the test number to the 100D module (*N* = any combination of 0 to 9).**		
		Dial or type [*N*].	
8	**Continue to assign the test telephone number to another 100D module or go to Step 9.**		
	Select **Next**.		F9
		Return to Step 6. The next slot will be displayed on Line 1.	
9	**Save your entry.**		
	Select **Enter**.		F10
10	**Return to the System Programming menu.**		
	Select **Exit** two times.		F5 F5

Timers and Counters

Use this procedure to set timer and counter thresholds.

CAUTION:
The factory settings for these thresholds are standard and rarely need to be changed. If you are not sure of the correct timer and threshold settings for your PRI lines and trunks, check with your AT&T representative before you make a change. Incorrect settings can cause your PRI lines and trunks to malfunction.

If the network does not respond before the programmed time or count, the system takes the appropriate corrective action.

The timers and counters are listed below.

- **T200 Timer.** Times the delay in the link layer acknowledgement of a message sent from the system to the network over a D-channel.
- **T203 Timer.** Times the interval between each exchange of messages between the system and the network on the D-channel.
- **N200 Counter.** Counts the number of times the system has transmitted a message on a D-channel because no link layer acknowledgement is received from the network.
- **N201 Counter.** Counts the maximum number of layer three octets the system can send or receive in a single D-channel message.
- **K Counter.** Counts the number of layer three unacknowledged messages sent from the system to the network on a D-channel.
- **T303 Timer.** Times the delay in network response when the system sends a setup message to initiate an outgoing call.
- **T305 Timer.** Times the delay in network response when the system sends a disconnect message to clear a call.
- **T308 Timer.** Times the delay in network response when the system sends a release message to clear a call.
- **T309 Timer.** Times the duration of a D-channel data link failure (a loss of signaling for the entire PRI connection).
- **T310 Timer.** Times the network delay following the receipt of a call preceding message on an outgoing call.
- **T313 Timer.** Times the delay in network response when the system sends a connect message that indicates the completion of an incoming call.
- **T316 Timer.** Times the delay in network response when the system sends a restart message to clear a B-channel.

NOTE:
If you enter an invalid timer value, the number you enter is truncated to the closest valid value. For example, if you enter 45 for a counter that ranges from 0 to 30, 4 is recorded as the counter value.

Table 4–2 shows the factory setting for each timer and counter and the valid range for each threshold.

Summary: Timers and Counters

Programmable by	System manager
Mode	All
Idle Condition	Not required
Planning Form	Form 3b, Incoming Trunks: DS1 Connectivity (100D module)
Factory Setting	See Table 4–2
Valid Entries	See Table 4–2
Inspect	No
Copy Option	No
Console Procedure	`LinesTrunks`→`PRI`→`Protocol`→`Timers`→Dial slot no.→`Enter`→Select timer/counter→**Drop**→Dial no. of ms/octets/and so on→`Enter`→`Exit`→`Exit`→`Exit`→`Exit`
PC Procedure	[F4]→[F6]→[F6]→[F1]→Type slot no.→[F10]→Select timer/counter→[Alt] + [P]→Type no. of ms/octets/and so on →[F10]→[F5]→[F5]→[F5]→[F5]

Table 4–2. Timers and Counters

Timer/Counter	Purpose	Factory Setting	Valid Range
T200 Timer	Maximum response time	1 second	1000 to 3000 ms
T203 Timer	Maximum time	30 seconds	1 to 60 seconds
N200 Counter	Maximum transmissions	3 transmissions	1 to 5 transmissions
N201 Counter	Maximum octets	260 octets	16 to 260 octets
K Counter	Maximum outstanding I-frames	7 frames	1 to 15 frames
T303 Timer	Set up timeout	4 seconds	4 to 12 seconds
T305 Timer	Disconnect timeout	4 seconds	4 to 30 seconds
T308 Timer	Release timeout	4 seconds	4 to 12 seconds
T309 Timer	Signal loss	90 seconds	30 to 120 seconds
T310 Timer	Call Proc. timeout	10 seconds	2 to 10 seconds
T313 Timer	Connect timeout	4 seconds	4 to 12 seconds
T316 Timer	Restart timeout	120 seconds	30 to 120 seconds

Procedure: Timers and Counters

	Console Display/Instructions	Additional Information	PC
1	**Select the Lines and Trunks menu.**		
	System Programming: > Make a selection System Extensions SysRenumber Options Operator Tables LinesTrunks AuxEquip Exit NightSrvce		F4
2	**Select PRI.**		
	Lines and Trunks: > Make a selection LS/GS/DSL PRI TIE Lines Copy TT/LS Disc RemoteAccss DID Pools Exit Toll Type		F6
3	**Select Protocol.**		
	PRI Lines: Make a selection PhoneNumber Protocol B-ChannlGrp DialPlanRtg NumbrToSend OutgoingTbl Test TelNum Exit		F6
4	**Select Timers.**		
	PRI Protocol Options: Make a selection Timers TEI Exit		F1
5	**Enter the number of the slot in the control unit that contains the 100D module (*nn* = 1 to 17).**		
	PRI Timers: Enter slot number (1-17) Backspace Exit Enter	Dial or type [*nn*].	
6	**Save your entry.**		

Console Display/Instructions	Additional Information	PC
Select **Enter**.		F10
7 Select the timer/counter to change.		
Slot *xx* PRI Settings: > Make a selection T200 Timer K Counter T203 Timer T303 Timer N200Counter T305 Timer N201Counter T308 Timer Exit T309 Timer	*xx* = number entered in Step 5 To select other timers, press **More** to go to the second PRI Settings screen.	PgDn
Slot *xx* PRI Settings: Make a selection T310 Timer T313 Timer T316 Timer Exit	Press the button or function key next to your selection.	
8 Erase the current setting.		
xxxx(Display depends on timer/counter selected). Backspace Next Exit Enter	Press **Drop**.	Alt + P
9 Enter the new setting (see Table 4–2).		
	Dial or type [*nnnn*].	
10 Continue to assign the setting to another slot or go to Step 11.		
Select **Next**.	Return to Step 8. The next slot will be displayed on Line 1.	F9
11 Save your entry.		
Select **Enter**.		F10
12 Return to the System Programming menu.		
Select **Exit** four times.		F5 F5 F5 F5

Terminal Equipment Identifier

Use this procedure to assign the link layer address of a piece of equipment connected to each D-channel. Normally, only one piece is connected and the system assumes that the Terminal Equipment Identifier (TEI) is 0.

CAUTION:
The value of the TEI rarely has to be changed. Check with your AT&T representative before changing this value.

Summary: Terminal Equipment Identifier

Programmable by	System manager
Mode	All
Idle Condition	Not required
Planning Form	Form 3b, Incoming Trunks: DS1 Connectivity (100D module)
Factory Setting	0
Valid Entries	0 to 63
Inspect	No
Copy Option	No
Console Procedure	LinesTrunks→PRI→Protocol→TEI→Dial slot no.→Enter→**Drop**→Dial new ID no.→Enter→Exit→Exit→Exit
PC Procedure	[F4]→[F6]→[F6]→[F2]→Type slot no.→[F10]→[Alt] + [P]→Type new ID no.→[F10]→[F5]→[F5]→[F5]

Procedure: Terminal Equipment Identifier

Console Display/Instructions	Additional Information	PC
1 Select the Lines and Trunks menu.		
System Programming: > Make a selection System Extensions SysRenumber Options Operator Tables LinesTrunks AuxEquip Exit NightSrvce		[F4]

	Console Display/Instructions	Additional Information	PC
2	**Select PRI.**		
	Lines and Trunks: > Make a selection LS/GS/DSL PRI TIE Lines Copy TT/LS Disc RemoteAccss DID Pools Exit Toll Type		F6
3	**Select Protocol.**		
	PRI Lines: Make a selection PhoneNumber Protocol B-ChannlGrp DialPlanRtg NumbrToSend OutgoingTbl Test TelNum Exit		F6
4	**Select TEI.**		
	PRI Protocol Options: Make a selection Timers TEI Exit		F2
5	**Enter the number of the slot in the control unit that contains the 100D module (*nn* = 1 to 17).**		
	PRI TEI: Enter slot number (1-17) Backspace Exit Enter	Dial or type [*nn*].	
6	**Save your entry.**		
	Select **Enter**.		F10
7	**Erase the current identification number (*nn*).**		
	Slot *xxx*TEI: Enter terminal equipment id number (0-63) *nn* Backspace Next Exit Enter	*xx* = number entered in Step 5 Press **Drop**.	Alt + P

	Console Display/Instructions	Additional Information	PC
8	**Enter the new identification number (*n* = 0 to 63).**		
		Dial or type [*nn*].	↵
9	**Continue to assign the identification number to another slot or go to Step 10.**		
	Select **Next**.		F9
		Return to Step 7. The next slot will be displayed on Line 1.	
10	**Save your entry.**		
	Select **Enter**.		F10
11	**Return to the System Programming menu.**		
	Select **Exit** three times.		F5 F5 F5

Dial Plan Routing

Dial plan routing provides a way to route incoming calls on a “per B-channel group” basis. An incoming call is routed by matching the incoming number (by service, number of digits, and pattern) and then optionally deleting and/or adding digits to direct the call to a specific endpoint. A service must be specified; the number of digits and pattern are optional. For example, you can specify that calls received from a particular area code should be routed to the specific individual or group responsible for accounts in that area.

Dial plan routing is available in Hybrid/PBX mode only. Key systems route incoming calls on a per-line basis.

NOTE:
You can enter a service not shown on the Network Service screen by using the five-digit binary code that represents the service in the Network Facilities Information Element of ISDN PRI layer three signaling protocol. (Contact your service provider for more information about the codes.) See “Miscellaneous Procedures.”

IMPORTANT:
You must program a service before you program any other Dial Plan Routing function. If you have not programmed a service, complete the procedure below for the **Service** option and then repeat the procedure for each optional function that you want to program.

Summary: Dial Plan Routing

Programmable by	System manager
Mode	Hybrid/PBX
Idle Condition	Not required
Planning Form	Form 3b, Incoming Trunks: DS1 Connectivity (100D module)
Factory Setting	Service: empty; Patterns: blank; Total Digits: 0; Delete Digits: 0; Add Digits: 0
Valid Entries	Service: Toll, Local, Miscellaneous Entries: 0–15 Digits per Pattern: 0–8 Total Digits: 1–14 Delete Digits: 0–14, 0=wildcard Add Digits: 0–4 (valid digits: 0–9)
Inspect	No
Copy Option	No

Console Procedure	To specify Service:
	`LinesTrunks`→`PRI`→`DialPlanRtg`→`Service`→Dial entry no.→`Enter`→Select service→`Exit`→`Exit`→`Exit`
	To specify Patterns:
	`LinesTrunks`→`PRI`→`DialPlanRtg`→`Patterns`→Dial entry no.→`Enter`→**Drop**→Dial pattern→`Enter`→`Exit`→`Exit`→`Exit`
	To specify Total Digits:
	`LinesTrunks`→`PRI`→`DialPlanRtg`→`Total Digits`→Dial entry no.→`Enter`→**Drop**→Dial digits→`Enter`→`Exit`→`Exit`→`Exit`
	To specify Delete Digits:
	`LinesTrunks`→`PRI`→`DialPlanRtg`→`Delete Digits`→Dial entry no.→`Enter`→**Drop**→Dial delete digits→`Enter`→`Exit`→`Exit`→`Exit`
	To specify Add Digits:
	`LinesTrunks`→`PRI`→`DialPlanRtg`→`Add Digits`→Dial entry no.→`Enter`→**Drop**→Dial add digits→`Enter`→`Exit`→`Exit`→`Exit`

PC Procedure

To specify Service:
F4 → F6 → F7 → F2 → Type entry no. → F10 → Select service → F10 → F5 → F5 → F5

To specify Patterns:
F4 → F6 → F7 → F2 Type entry no. → F10 → Alt + P → Type pattern → F10 → F5 → F5 → F5

To specify Total Digits:
F4 → F6 → F7 → F3 Type entry no. → F10 → Alt + P → Type digits → F10 → F5 → F5 → F5

To specify Delete Digits:
F4 → F6 → F7 → F4 Type entry no. → F10 → Alt + P → Type delete digits → F10 → F5 → F5 → F5

To specify Add Digits:
F4 → F6 → F7 → F5 Type entry no. → F10 → Alt + P → Type add digits → F10 → F5 → F5 → F5

Procedure: Dial Plan Routing

	Console Display/Instructions	Additional Information	PC
1	**Select the Lines and Trunks menu.**		
	System Programming: > Make a selection System Extensions SysRenumber Options Operator Tables LinesTrunks AuxEquip Exit NightSrvce		F4
2	**Select PRI.**		
	Lines and Trunks: > Make a selection LS/GS/DSL PRI TIE Lines Copy TT/LS Disc RemoteAccss DID Pools Exit Toll Type		F6
3	**Select Dial Plan Routing.**		
	PRI Lines: Make a selection PhoneNumber Protocol B-ChannlGrp DialPlanRtg NumbrToSend OutgoingTbl Test TelNum Exit		F7

	Console Display/Instructions	Additional Information	PC
4	**Select Service.**	● ❖ ■ ▲	
	PRI Dial Plan Routing: Make a selection Service Add Digits Patterns TotalDigits DeleteDigit Exit	**Service** must be programmed. Continue with Step 5. Then program other options.	F1
		● If you select **Patterns**, go to Patterns Procedure.	F2
		❖ If you select **TotalDigits**, go to Total Digits Procedure.	F3
		■ If you select **DeleteDigit**, go to Delete Digits Procedure.	F4
		▲ If you select **Add Digits**, go to Add Digits Procedure.	F6
		Press the button or function key next to your selection.	
5	**Enter the entry number (*nn* = 0 to 15).**		
	DialPlanRouting Service: Enter entry number (0-15) Backspace Exit Enter	Dial or type [*nn*].	
6	**Save your entry.**		
	Select **Enter**.		F10
7	**Select a service.**	✚ ✕ ✶	
	DialPlanRouting Service: Make a selection AT&T Toll Local Misc Exit	If you select **AT&T Toll**, go to ✚ AT&T Toll Procedure.	F1
		If you select **Local**, go to ✕ Local Procedure.	F2
		If you select **Misc**, go to ✶ **Miscellaneous Procedure.**	F3

✚ AT&T Toll Procedure

	Console Display/Instructions	Additional Information	PC
1	**Select an AT&T service for the B-channel group.**		

	`Dial Plan Rtg Entry xx:`
	`Select one`
	`Megacom 800  MegacomWATS`
	`ACCUNET SDS  LongDistnce`
	`SoftDefNetw`
	`MULTIQUEST  Next`
	`Exit  Enter`
		xx = number entered in Step 5
		
		Press the button or function key next to your selection.	

2	**Continue to assign the service to another routing entry or go to Step 3.**		
	Select **Next**.	Return to Step 1. The next dial plan routing entry will be displayed on Line 1.	F9
3	**Save your entry.**		
	Select **Enter**.		F10
4	**Program additional options by returning to Step 4 of the main procedure or go to Step 5.**		
5	**Return to the System Programming menu.**		
	Select **Exit** three times.		F5 F5 F5

✖ Local Procedure

1	**Select a service for the B-channel group.**		

	`Dial Plan Rtg Entry xx:`
	`Select one`
	`INWATS`
	`56/64 Digtl`
	`VirtPrivNet`
	`OUTWATS  Next`
	`Exit  Enter`
		xx = number entered in Step 5
		
		Press the button or function key next to your selection.	

2	**Continue to assign the service to another routing entry or go to Step 3.**		
	Select **Next**.	Return to Step 1. The next dial plan routing entry will be displayed on Line 1.	F9
3	**Save your entry.**		
	Select **Enter**.		F10
4	**Program additional options by returning to Step 4 of the main procedure or go to Step 5.**		
5	**Return to the System Programming menu.**		
	Select **Exit** three times.		F5 F5 F5

✶ Miscellaneous Procedure

	Console Display/Instructions	Additional Information	PC
1	**Select a miscellaneous service.**		

	`Dial Plan Rtg Entry xx:`
	`Select one`
	`Other`
	`Any Service`
	`No Service`
	`Next`
	`Exit Enter`
		xx = number entered in Step 5
		
		Select **Other**,
		Any Service, or
		No Service.
			
			F1
			F2
			F3

2	**Continue to assign the service to another routing entry or go to Step 3.**		
	Select **Next**.	Return to Step 1. The next dial plan routing entry will be displayed on Line 1.	F9
3	**Save your entry.**		
	Select **Enter**.		F10
4	**Erase the current network service (*nnnnn*).**		

	`Dial Plan Rtg Entry xx:`
	`Enter Network Service`
	`(5 digit code of 0,1)`
	nnnnn
	
	`Backspace`
	`Exit Enter`
		xx = number entered in Step 5
		
		Select **Drop**.
			
			Alt + P

5	**Enter the five-digit code that corresponds to the service selected.**		
		Dial or type [*nnnnn*].	↵
6	**Continue to assign the code to another routing entry or go to Step 7.**		
	Select **Next**.	Return to Step 4. The next dial plan routing entry will be displayed on Line 1.	F9
7	**Save your entry.**		
	Select **Enter**.		F10
8	**Program additional options by returning to Step 4 of the main procedure or go to Step 9.**		
9	**Return to the System Programming menu.**		
	Select **Exit** three times.		F5 F5 F5

● Patterns Procedure

	Console Display/Instructions	Additional Information	PC
1	**Enter the entry number (*nn* = 0 to 15).**		

	`DialPlanRoutingPatterns:`
	`Enter entry no. (0-15)`
	
	`Backspace`
	`Exit  Enter`
		Leave field blank to match any pattern.
		
		Dial or type [*nn*].	

2	**Save your entry.**		
	Select **Enter**.		F10
3	**Erase the current number of digits to match entry (*n*).**		

	`Dial Plan Rtg Entry xx:`
	`Enter digits to match`
	`n`
	
	`Backspace  Next`
	`Exit  Enter`
		xx = number entered in Step 1
		
		Press **Drop**.
			Alt + P

4	**Enter the new number of digits to match (*n* = 0 to 8; use 0 to match any number of digits.).**		
		Dial or type [*n*].	
5	**Continue to assign the digits to another routing entry or go to Step 6.**		
	Select **Next**.		F9
		Return to Step 3. The next dial plan routing entry will be displayed on Line 1.	
6	**Save your entry.**		
	Select **Enter**.		F10
7	**Program additional options by returning to Step 4 of the main procedure or go to Step 8.**		
8	**Return to the System Programming menu.**		
	Select **Exit** three times.		F5 F5 F5

❖ Total Digits Procedure

	Console Display/Instructions	Additional Information	PC
1	**Enter the entry number (*nn* = 0 to 15).**		

	`DialPlanRtg TotalDigits:`
	`Enter entry no. (0-15)`
	
	`Backspace`
	`Exit  Enter`
		Use 0 to match any number of digits.
		
		Dial or type [*nn*].
			↵

2	**Save your entry.**		
	Select **Enter**.		F10
3	**Erase the current number of total digits (*nn*).**		

	`Dial Plan Rtg Entry xx:`
	`Enter number of digits`
	`in dialed number (0-14)`
	`nn`
	
	`Backspace  Next`
	`Exit  Enter`
		xx = number entered in Step 1
		
		Press **Drop**.
			Alt + P

4	**Enter the new total number of digits (*nn* = 0 to 14).**		
		Dial or type [*nn*].	↵
5	**Continue to assign the digits to another routing entry or go to Step 6.**		
	Select **Next**.		F9
		Return to Step 3. The next dial plan routing entry will be displayed on Line 1.	
6	**Save your entry.**		
	Select **Enter**.		F10
7	**Program additional options by returning to Step 4 of the main procedure or go to Step 8.**		
8	**Return to the System Programming menu.**		
	Select **Exit** three times.		F5 F5 F5

■ Delete Digit Procedure

1	**Enter the entry number (*nn* = 0 to 15).**		

	`DialPlanRtg DeleteDigits:`
	`Enter entry no. (0-15)`
	
	`Backspace`
	`Exit  Enter`
		Dial or type [*nn*].	↵

	Console Display/Instructions	Additional Information	PC
2	**Save your entry.**		
	Select **Enter**.		F10
3	**Erase the current number of delete digits (*nn*).**		

	`Dial Plan Rtg Entry xx:`
	`Enter number of digits`
	`to delete (0-14)`
	`nn`
	
	`Backspace  Next`
	`Exit  Enter`
		xx = number entered in Step 1
		
		Press **Drop**.
			Alt + P

4	**Enter the new number of digits to delete (*n* = 0 to 14).**		
		Dial or type [*nn*].	
5	**Continue to assign the delete digits to another routing entry or go to Step 6.**		
	Select **Next**.		F9
		Return to Step 3. The next dial plan routing entry will be displayed on Line 1.	
6	**Save your entry.**		
	Select **Enter**.		F10
7	**Program additional options by returning to Step 4 of the main procedure or go to Step 8.**		
8	**Return to the System Programming menu.**		
	Select **Exit** three times.		F5 F5 F5

▲ Add Digits Procedure

1	**Enter the entry number (*nn* = 0 to 15).**		

	`DialPlanRtg AddDigits:`
	`Enter entry no. (0-15)`
	
	`Backspace`
	`Exit  Enter`
		Dial or type [*nn*].	

2	**Save your entry.**		
	Select **Enter**.		F10

	Console Display/Instructions	Additional Information	PC
3	**Erase the current number of add digits (*nn*).**		

	`Dial Plan Rtg Entry xx:`
	`Enter digits to add`
	`nn`
	
	`Backspace  Next`
	`Exit  Enter`
		xx = number entered in Step 1	

		Press **Drop**.	Alt + P
4	**Enter the new number of digits to add (*nn*).**		
		Dial or type [*nn*].	
5	**Continue to assign the add digits to another routing entry or go to Step 6.**		
	Select **Next**.		F9
		Return to Step 3. The next dial plan routing entry will be displayed on Line 1.	
6	**Save your entry.**		
	Select **Enter**.		F10
7	**Program additional options by returning to Step 4 of the main procedure or go to Step 8.**		
8	**Return to the System Programming menu.**		
	Select **Exit** three times.		F5 F5 F5

Outgoing Tables

PRI provides tables that work in conjunction with personal lines, pools, and ARS tables to route calls. The following tables specify services for outgoing calls:

- **Call-by-Call.** Selects an outgoing service, based on routing digits and the bearer capability (voice, data, or both) of the calling extension. It allows a single group of B-channels to carry a variety of services, such as ACCUNET, SDN, and Megacom WATS.
- **Network Selection.** Selects a long-distance carrier. Calls that match Network Selection tables can be routed to a specific service by the Call-by-Call tables.
- **Special Services.** Selects services such as international dialing and operator assistance. Calls that match these tables are *not* routed by the Call-by-Call tables.

NOTE:
PRI tables that work with pools and ARS apply to Hybrid/PBX mode only.

Network Selection Tables

Dialed prefixes for selecting long-distance carriers are matched to entries in the four Network Selection tables. Eight default tables are provided, specifying 10*** and 101****. The asterisks are wildcards that represent the various long-distance carrier codes. (10*** is the current U.S. standard for specifying long-distance carriers; 101**** is provided for future use.)

NOTE:
U.S. customers rarely need to program additional Network Selection tables because long-distance carrier codes match 10*** or 101****.

Summary: Network Selection Tables

Programmable by	System manager
Mode	Key and Hybrid/PBX
Idle Condition	Not required
Planning Form	Form 3b, Incoming Trunks: DS1 Connectivity (100D module)
Factory Setting	Not applicable
Valid Entries	Prefix for long distance carrier
Inspect	No
Copy Option	No
Console Procedure	LinesTrunks→PRI→OutgoingTbl→NetwkSelect→Dial entry no.→Enter→**Drop**→Dial prefix→Enter→Exit→Exit→Exit
PC Procedure	[F4]→[F6]→[F8]→[F1]→Type entry no.→[F10]→[Alt] + [P]→Type prefix→[F10]→[F5]→[F5]→[F5]

Procedure: Network Selection Tables

Console Display/Instructions	Additional Information	PC
1 Select the Lines and Trunks menu.		
System Programming: > Make a selection System Extensions SysRenumber Options Operator Tables LinesTrunks AuxEquip Exit NightSrvce		[F4]

	Console Display/Instructions	Additional Information	PC
2	**Select PRI.**		
	Lines and Trunks: > Make a selection LS/GS/DSL PRI TIE Lines Copy TT/LS Disc RemoteAccss DID Pools Exit Toll Type		F6
3	**Select Outgoing Tables.**		
	PRI Lines: Make a selection PhoneNumber Protocol B-ChannlGrp DialPlanRtg NumbrToSend OutgoingTbl Test TelNum Exit		F8
4	**Select Network Selection tables.**		
	PRI Outgoing Tables: Make a selection NetwkSelect SpecialServ CBC Service Exit		F1
5	**Enter the table number (*n* = 0 to 3).**		
	Network Selection Table: Enter entry number (0-3) Backspace Exit Enter	Dial or type [*n*].	↵
6	**Save your entry.**		
	Select **Enter**.		F10
7	**Erase the current dial prefix (*n*).**		
	Netwk SelectTbl Entry *x*: Enter dial prefix (use * for wild card) *n* Backspace Next Exit Enter	*x* = number entered in Step 5 Press **Drop**.	Alt+P

	Console Display/Instructions	Additional Information	PC
8	**Enter the dial prefix.**		
		Dial or type [n].	↵
9	**Continue to assign the dial prefix to another table or go to Step 10.**		
	Select **Next**		F9
		Return to Step 7. The next table will be displayed on Line 1.	
10	**Save your entry.**		
	Select **Enter**.		F10
11	**Return to the System Programming menu.**		
	Select **Exit** three times.		F5 F5 F5

Special Services Tables

Eight tables provide for international calling and for operator-assisted calls. Default tables include the special prefixes 0 and 00 for operator-assisted calls. Dialed numbers are matched against entries in these tables for patterns (011, 010, 01, 00, 0, and 1); for operator assistance (operator-assisted, presubscribed common carrier operator, and none); and for type of number (national or international). Up to four digits can be deleted.

Summary: Special Services Tables

Programmable by	System manager
Mode	Key and Hybrid/PBX
Idle Condition	Not required
Planning Form	Form 3b, Incoming Trunks: DS1 Connectivity (100D module)
Factory Setting	See Table 4–3
Valid Entries	Prefix for international or operator-assisted calls
Inspect	No
Copy Option	No
Console Procedure	To specify Pattern: LinesTrunks→PRI→OutgoingTbl→SpecialServ→Pattern→Dial entry no.→Enter→**Drop**→Dial pattern→Enter→Exit→Exit→Exit→Exit To specify Operator: LinesTrunks→PRI→OutgoingTbl→SpecialServ→Operator→Dial entry no.→Enter→Select type of operator →Enter→Exit→Exit→Exit→Exit

To specify Type of Number:
LinesTrunks→PRI→OutgoingTbl→SpecialServ→TypeOfNumbr→Dial entry no.→Enter→Select type→Enter→Exit→Exit→Exit→Exit

To specify Delete Digits:
LinesTrunks→PRI→OutgoingTbl→SpecialServ→DeleteDigit→Dial entry no.→Enter→**Drop**→Dial pattern→Enter→Exit→Exit→Exit→Exit

PC Procedure

To specify Pattern:
[F4]→[F6]→[F8]→[F2]→[F1]→Type entry no.→[F10]→[Alt] + [P]→Type pattern→[F10]→[F5]→[F5]→[F5]→[F5]

To specify Operator:
[F4]→[F6]→[F8]→[F2]→[F2]→Type entry no.→[F10]→Select type of operator→[F10]→[F5]→[F5]→[F5]→[F5]

To specify Type of Number:
[F4]→[F6]→[F8]→[F2]→[F3]→Type entry no.→[F10]→Type number type→[F10]→[F5]→[F5]→[F5]→[F5]

To specify Delete Digits:
[F4]→[F6]→[F8]→[F2]→[F4]→Type entry no.→[F10]→[Alt] + [P]→Type digits to be deleted→[F10]→[F5]→[F5]→[F5]→[F5]

Table 4–3. Special Services Table

Table	Pattern (up to 4 digits)	Operator	Delete Digits (0 to 4)
0	011	none	3
1	010	Local Operator	3
2	01	Local Operator	2
3	00	Local Operator/ Presubscribed Carrier	2
4	0	Local Operator	1
5	1	none	1

Procedure: Special Services Tables

	Console Display/Instructions	Additional Information	PC
1	**Select the Lines and Trunks menu.**		
	System Programming: > Make a selection System Extensions SysRenumber Options Operator Tables LinesTrunks AuxEquip Exit NightSrvce		F4
2	**Select PRI.**		
	Lines and Trunks: > Make a selection LS/GS/DSL PRI TIE Lines Copy TT/LS Disc RemoteAccss DID Pools Exit Toll Type		F6
3	**Select Outgoing Tables.**		
	PRI Lines: Make a selection PhoneNumber Protocol B-ChannlGrp DialPlanRtg NumbrToSend OutgoingTbl Test TelNum Exit		F8
4	**Select the Special Services tables.**		
	PRI Outgoing Tables: Make a selection NetwkSelect SpecialServ CBC Service Exit		F2

	Console Display/Instructions	Additional Information	PC
5	**Select an option.**	●◆■▲	
	Special Services Table: Make a selection Pattern Operator TypeOfNumber DeleteDigit Exit	If you select **Pattern**, go to ● Pattern Procedure.	F1
		If you select **Operator**, go to ◆ Operator Procedure.	F2
		If you select **TypeOfNumber**, go to ■ Type Of Number Procedure.	F3
		If you select **DeleteDigit**, go to ▲ Delete Digits Procedure.	F4
		Press the button or function key next to your selection.	

● Pattern Procedure

1	**Enter the table number (*n* = 0 to 7).**		
	Special Services Table: Enter entry number (0-7) Backspace Exit Enter	Dial or type [*n*].	
2	**Save your entry.**		
	Select **Enter**.		F10
3	**Erase the current pattern (*nnnn*).**		
	SpecialServ Tbl Entry *x*: Enter pattern *nnnn* Backspace Next Exit Enter	*x* = number entered in Step 1 Press **Drop**.	Alt + P
4	**Enter the pattern to be matched.**		
		Dial or type [nnnn].	
5	**Continue to assign the pattern to another table or go to Step 6.**		
	Select **Next**.		F9
		Return to Step 3. The next table will be displayed on Line 1.	

	Console Display/Instructions	Additional Information	PC
6	**Save your entry.**		
	Select **Enter**.		F10
7	**Return to the System Programming menu.**		
	Select **Exit** four times.		F5 F5 F5 F5

◆ Operator Procedure

1	**Enter the table number (*n* = 0 to 7).**		

	`Special Services Table:`
	`Enter entry number (0-7)`
	
	`Backspace`
	`Exit  Enter`
		Dial or type [*n*].	

2	**Save your entry.**		
	Select **Enter**.		F10
3	**Specify the type of operator.**		

	`SpecialServ Tbl Entry x:`
	`Choose type of operator`
	`Local Operator`
	`Presubscribed Carrier`
	`No Operator`
	`Next`
	`Exit  Enter`
		x = number entered in Step 1
		
		Select **Local Operator**,
		Presubscribed Carrier, or
		No Operator.
			
			F1
			F2
			F3

4	**Continue to assign the operator type to another table or go to Step 5.**		
	Select **Next**.	Return to Step 3. The next table will be displayed on Line 1.	F9
5	**Save your entry.**		
	Select **Enter**.		F10
6	**Return to the System Programming menu.**		
	Select **Exit** four times.		F5 F5 F5 F5

■ Type Of Number Procedure

	Console Display/Instructions	Additional Information	PC
1	**Enter the table number (*n* = 0 to 7).**		

	`Special Services Table:`
	`Enter entry number (0-7)`
	
	`Backspace`
	`Exit  Enter`
		Dial or type [*n*].	

2	**Save your entry.**		
	Select **Enter**.		F10
3	**Specify the type of operator.**		

	`SpecialServ Tbl Entry x:`
	`Choose type of number`
	`National`
	`International`
	
	`Next`
	`Exit  Enter`
		x = number entered in Step 1
		
		Select **National** or **International**.
			
			F1
			F2

4	**Continue to assign the number type to another table or go to Step 5.**		
	Select **Next**.	Return to Step 3. The next table will be displayed on Line 1.	F9
5	**Save your entry.**		
	Select **Enter**.		F10
6	**Return to the System Programming menu.**		
	Select **Exit** four times.		F5 F5 F5 F5

▲ Delete Digits Procedure

1	**Enter the table number (*n* = 0 to 7).**		

	`Special Services Table:`
	`Enter entry number (0-7)`
	
	`Backspace`
	`Exit  Enter`
		Dial or type [*n*].	

2	**Save your entry.**		
	Select **Enter**.		F10

	Console Display/Instructions	Additional Information	PC
3	**Erase the current number of digits (*n*).**		
	SpecialServ Tbl Entry *x*: Enter number of digits to delete (0-4) *n* Backspace Next Exit Enter	*x* = number entered in Step 1 Press **Drop**.	Alt + P
4	**Enter the number of digits to be deleted (*n* = 0 to 4).**		
		Dial or type [n].	
5	**Continue to assign the delete digits to another table or go to Step 6.**		
	Select **Next**.	Return to Step 3. The next table will be displayed on Line 1.	F9
6	**Save your entry.**		
	Select **Enter**.		F10
7	**Return to the System Programming menu.**		
	Select **Exit** four times.		F5 F5 F5 F5

Call-by-Call Service Table

When a call is placed on a Call-by-Call B-channel group, a specific service is selected. The selected service depends on the match between the dialed digits and the table entries. A service must be specified; otherwise the entry is ignored.

The Call-by-Call table can contain up to 10 entries. Each entry can contain up to 10 patterns, each with a maximum of eight digits. If a dialed number matches two patterns, the longer pattern takes precedence. For example, 212555 matches both 212555 and 212, but the system will match the longer pattern. In addition to patterns, the Call-by-Call table can be used to specify from 0 through 8 digits to be deleted (the default is 0).

If the last entry in the table is empty (that is, no pattern is specified), this entry is used as a default and matches any pattern and type of call.

If ARS (Hybrid/PBX only) is used, ARS selects the route. If the route points to a Call-by-Call B-Channel group, Call-by-Call service selects the network service. ARS Call-by-Call service is integrated according to the specified bearer capability (voice, data, or both) for each feature. In addition, ARS digit deletion/addition may help specify the service selected by the Call-by-Call feature. See “Automatic Route Selection” for more information.

Summary: Call-by-Call Service Table

Programmable by	System manager
Mode	Key and Hybrid/PBX
Idle Condition	Not required
Planning Form	Form 3b, Incoming Trunks: DS1 Connectivity (100D module)
Factory Setting	Not applicable
Valid Entries	Pattern: up to eight digits Call Type: voice, data, both Service: AT&T Toll, Local, Miscellaneous Delete Digits: 0 to 8
Inspect	No
Copy Option	No
Console Procedure	To specify Patterns: LinesTrunks→PRI→OutgoingTbl→CBC Service→Patterns→Dial list no.→Enter→**Drop**→Dial pattern→Enter→Exit→Exit→Exit→Exit To specify Voice/Data: LinesTrunks→PRI→OutgoingTbl→CBC Service→Voice/Data→Dial list no.→Enter→Select voice, data, or both→Enter→Exit→Exit→Exit→Exit To specify Network Service: LinesTrunks→PRI→OutgoingTbl→CBC Service→NetwkServ→Dial list no.→Enter→Select service→Enter→Exit→Exit→Exit→Exit To specify Delete Digits: LinesTrunks→PRI→OutgoingTbl→CBC Service→DeleteDigit→Dial list no.→Enter→**Drop**→Dial no. of digits→Enter→Exit→Exit→Exit→Exit
PC Procedure	To specify Patterns: F4→F6→F8→F3→F1→Type list no.→F10→Alt + P→Type pattern→F10→F5→F5→F5→F5 To specify Voice/Data: F4→F6→F8→F3→F2→Type list no.→F10→Select voice, data, or both→F10→F5→F5→F5→F5 To specify Network Service: F4→F6→F8→F3→F3→Type list no.→F10→Select service→F10→F5→F5→F5 To specify Delete Digits: F4→F6→F8→F3→F4→Dial list no.→F10→Alt + P→Dial no. of digits→F10→F5→F5→F5→F5

Procedure: Call-by-Call Service

	Console Display/Instructions	Additional Information	PC
1	**Select the Lines and Trunks menu.**		
	System Programming: > Make a selection System Extensions SysRenumber Options Operator Tables LinesTrunks AuxEquip Exit NightSrvce		F4
2	**Select PRI.**		
	Lines and Trunks: > Make a selection LS/GS/DSL PRI TIE Lines Copy TT/LS Disc RemoteAccss DID Pools Exit Toll Type		F6
3	**Select Outgoing Tables.**		
	PRI Lines: Make a selection PhoneNumber Protocol B-ChannlGrp DialPlanRtg NumbrToSend OutgoingTbl Test TelNum Exit		F8
4	**Select Call-by-Call Service.**		
	PRI Outgoing Tables: Make a selection NetwkSelect SpecialServ CBC Service Exit		F3

	Console Display/Instructions	Additional Information	PC
5	**Select an option.**	●◆■▲	
	CallByCall Service Table: Make a selection Patterns Voice/Data NetworkServ DeleteDigit Exit	If you select **Patterns**, go to ● Patterns Procedure.	F1
		If you select **Voice/Data**, go to ◆ Voice/Data Procedure.	F2
		If you select **NetworkServ**, go to ■ Network Service Procedure.	F3
		If you select **DeleteDigit**, go to ▲ Delete Digits Procedure.	F4

● Patterns Procedure

1	**Enter the list (*l* = 0 to 9) and the table entry (*e* = 0 to 9) numbers.**		
	CBC Services - Patterns: Enter list (0-9) and entry (0-9) Backspace Exit Enter	Dial or type [*le*].	
2	**Save your entry.**		
	Select **Enter**.		F10
3	**Erase the current pattern (*nnn*).**		
	CBC Serv list *l* Entry *e*: Enter pattern *nnn* Backspace Next Exit Enter	*l* = list number entered in Step 1 *e* = entry number entered in Step 1 Press **Drop**.	Alt + P
4	**Enter a pattern of up to eight digits (*n* = 0 to 9).**		
		Dial or type [*n*].	
5	**Assign a pattern to the next table or go to Step 6.**		
	Select **Next**.		F9
		Return to Step 3. The next table will be displayed on Line 1.	

	Console Display/Instructions	Additional Information	PC
6	**Save your entry.**		
	Select **Enter**.		F10
7	**Return to the System Programming menu.**		
	Select **Exit** four times.		F5 F5 F5 F5

◆ Voice/Data Procedure

1	**Enter the list number (*n* = 0 to 9).**		
	CBC Services Voice/Data: Enter list number (0-9) Backspace Exit Enter	Dial or type [*n*].	
2	**Save your entry.**		
	Select **Enter**.		F10
3	**Specify voice, data, or both.**		
	CBC Services List *x*: Make a selection Voice Only Data Only Voice/Data Next Exit Enter	*x* = number entered in Step 1 Select **Voice Only**, **Data Only**, or **Voice/Data**.	 F1 F2 F3
4	**Assign to another CBC services list or go to Step 5.**		
	Select **Next**.	Return to Step 3. The next CBC services list will be displayed on Line 1.	F9
5	**Save your entry.**		
	Select **Enter**.		F10
6	**Return to the System Programming menu.**		
	Select **Exit** four times.		F5 F5 F5 F5

■ Network Service Procedure

	Console Display/Instructions	Additional Information	PC
1	**Enter the list number (*n* = 0 to 9).**		
	CBC Network Service: Enter list number (0-9) Backspace Exit Enter	Dial or type [*n*].	
2	**Save your entry.**		
	Select **Enter**.		F10
3	**Specify a Network Service.**	✚ ✪ ✶	
	CBC Network Service: Make a selection AT&T Toll Local Misc Exit	If you select **AT&T Toll**, go to ✚ AT&T Toll Procedure. If you select **Local**, go to. ✪ Local Procedure. If you select **Misc**, go to ✶ Miscellaneous Procedure.	F1 F2 F3

✚ AT&T Toll Procedure

1	**Specify an AT&T Toll service.**		
	CBC Services List *x*: Select One MegacomWATS ACCUNET SDS SoftDefNetw LongDistance Next Exit Enter	*x* = number entered in Step 1 of the ■ Network Service Procedure. Press the button or function key next to your selection.	
2	**Continue to specify AT&T Toll service for another list number or go to Step 3.**		
	Select **Next**.	Return to Step 1. The next CBC services list will be displayed on Line 1.	F9
3	**Save your entry.**		
	Select **Enter**.		F10
4	**Return to the System Programming menu.**		
	Select **Exit** four times.		F5 F5 F5 F5

✪ Local Procedure

	Console Display/Instructions	Additional Information	PC
1	**Specify a local service.**		
	CBC Services List *x*: Select One OUTWATS 56/64 Digtl VirtPrivNet Next Exit Enter	*x* = number entered in Step 1 of the ■ Network Service Procedure.	
		Select **OUTWATS**,	F1
		56/64 Digtl, or	F2
		VirtPrivNet.	F3
2	**Continue to specify local service for another list number or return to Step 3.**		
	Select **Next**.		F9
		Return to Step 1. The next CBC services list will be displayed on Line 1.	
3	**Save your entry.**		
	Select **Enter**.		F10
4	**Return to the System Programming menu.**		
	Select **Exit** four times.		F5 F5 F5 F5

✶ Miscellaneous Procedure

1	**Specify a service.**		
	CBC Service List *x*: Select one Other No Service Next Exit Enter	*x* = number entered in Step 1 of the ■ Network Service Procedure.	
		Select **Other** or	F1
		No Service.	F2
		If you select **No Service**, you have completed this procedure. Return to Step 6 of the main procedure.	
2	**Continue to specify the service for another service list number or go to Step 3.**		
	Select **Next**.		F9
		Return to Step 3. The next CBC services list will be displayed on Line 1.	
3	**Save your entry.**		
	Select **Enter**.		F10

	Console Display/Instructions	Additional Information	PC
4	**Erase the current code (*nnnnn*).**		
	CBC Services List *x*: Enter Network Service (5 digit code of 0, 1) *nnnnn* Backspace Next Exit Enter	*x* = number entered in Step 1 of the ■ Network Service Procedure. Press **Drop**.	Alt + P
5	**Enter the five-digit code for the other service.**		
		Dial or type [*nnnnn*].	
6	**Continue to assign the code to another service list or return to Step 7.**		
	Select **Next**.		F9
		Return to Step 4. The next CBC services list will be displayed on Line 1.	
7	**Save your entry.**		
	Select **Enter**.		F10
8	**Return to the System Programming menu.**		
	Select **Exit** four times.		F5 F5 F5 F5

▲ Delete Digits Procedure

1	**Enter the list number (*n* = 0 to 9).**		
	CBC Serv--Delete Digits: Enter list number (0-9) Backspace Exit Enter	Dial or type [*n*].	
2	**Save your entry.**		
	Select **Enter**.		F10
3	**Erase the current number of delete digits (*n*).**		
	CBC Services List *x* : Enter number of digits to delete (0-9) *n* Backspace Next Exit Enter	*x* = number entered in Step 1 Press **Drop**.	Alt + P
4	**Enter the number of digits to be deleted (*n* = 0 to 8).**		
		Dial or type [n].	

	Console Display/Instructions	Additional Information	PC
5	**Continue to assign delete digits to another service list or go to Step 6.**		
	Select **Next**.		F9
		Return to Step 3. The next CBC services list will be displayed on Line 1.	
6	**Save your entry.**		
	Select **Enter**.		F10
7	**Return to the System Programming menu.**		
	Select **Exit** four times.		F5 F5 F5 F5

BRI Facilities

The procedures in this section provide the steps for programming the following options for Basic Rate Interface (BRI) facilities connected to a 800 NI-BRI module:

- Service Profile Identifier (SPID) and Directory Number (DN)
- Timers

NOTES:

1. The 800 NI-BRI module is only available in Release 4.0 and later.
2. If you are adding BRI facilities to an existing system, clock synchronization must be set correctly. To inspect or change these values, see “Clock Synchronization” in “Lines and Trunks.”

Service Profile Identifier (SPID) and Directory Number (DN)

Use this procedure to program the Service Profile Identifier (SPID) and Directory Number (DN) for each BRI line in the system. Until these values are programmed for each line, the system will consider the BRI line inactive and the line will not initialize.

NOTE:
The system will not be forced idle when SPIDs are entered. However, if for some reason a SPID changes, the line must be idle (no active call on the line) in order to change the SPID.

Summary: Service Profile Identifier (SPID) and Directory Number (DN)

Programmable by	System manager
Mode	Key, Hybrid/PBX
Idle Condition	Not required
Planning Form	
Factory Setting	none
Valid Entries	SPID: up to 20 digits (any combination of 0 to 9) DN: up to 10 digits (any combination of 0 to 9)
Inspect	No
Copy Option	No
Console Procedure	`LinesTrunks`→**More**→`BRI`→`SPID/DN`.→Dial line/trunk no.→`Enter`→Dial SPID→`Enter`→Dial DN→`Enter`→`Exit`→`Exit`
PC Procedure	[F4]→[PgUp]→[F8]→[F1]→Type line/trunk no.→[F10]→Type SPID→[F10]→Type DN→[F10]→[F5]→[F5]

Procedure: Service Profile Identifier (SPID) and Directory Number (DN)

	Console Display/Instructions	Additional Information	PC
1	**Select the Lines and Trunks menu.**		
	System Programming: > Make a selection System Extensions SysRenumber Options Operator Tables LinesTrunks AuxEquip Exit NightSrvce		F4
2	**Go to the second screen of the Lines and Trunks menu.**		
	Lines and Trunks: > Make a selection LS/GS/DSL PRI TIE Lines Copy TT/LS Disc RemoteAccss DID Pools Exit Toll Type	Press **More**.	PgUp
3	**Select BRI.**		
	Lines and Trunks: > Make a selection HoldDiscnct LS-ID Delay PrncipalUsr ClockSync QCC Prior BRI QCC Oper T1 Data NW Exit		F8
4	**Select Service Profile Identifier (SPID) and Directory Number (DN).**		
	BRI Lines: Make a selection SPID/DN Timers Exit	Select SPID/DN.	F1
5	**Enter the line/trunk number (*nnn* = 1 to 80).**		
	SPID/DN: Enter line number *nnn* Backspace Exit Enter	Dial or type [*nnn*].	

	Console Display/Instructions	Additional Information	PC
6	**Erase the current SPID.**		
	Line number *xxx*: Enter SPID *xxxxxxxxxxxxxxxxxxx* Backspace Exit Enter	*xxx* = line number selected in Step x. Press **Drop**.	Alt + P
7	**Enter the new SPID.**		
		Dial or type [*xxxxxxxxxxxxxxxxxxxx*].	
8	**Save your entry.**		
	Select **Enter**.		F10
9	**Erase the current DN.**		
	Line xxx: Enter DN *xxxxxxxxxx* Backspace Next Exit Enter	*xxx* = line number selected in Step x. Press **Drop**.	Alt + P
10	**Enter the new DN.**		
		Dial or type [*xxxxxxxxxx*].	
11	**Save your entry.**		
	Select **Enter**.		F10
12	**Return to the System Programming menu.**		
	Select **Exit** three times.		F5 F5 F5

Timers

Use this procedure to set timer thresholds.

CAUTION:
The factory settings for these thresholds are standard and rarely need to be changed. If you are not sure of the correct timer and threshold settings for your BRI lines and trunks, check with your AT&T representative before you make a change. Incorrect settings can cause your BRI lines and trunks to malfunction.

If the network does not respond before the programmed time, the system takes the appropriate corrective action.

The timers are listed below.

- **T200 Timer.** Minimum time that the link layer waits for an acknowledgement of a message sent from the communication system to the network.
- **T203 Timer.** Maximum time that the link layer can remain inactive.
- **T303 Timer.** Times the delay in network response when the communication system sends a setup message to initiate an outgoing call.
- **T305 Timer.** Times the delay in network response when the communication system sends a disconnect message to clear a call.
- **T308 Timer.** Times the delay in network response when the communication system sends a release message to clear a call.

NOTE:
If you enter an invalid timer value, you will hear an error beep and the value that was previously stored will be displayed on the screen.

Table 4–4 shows the factory setting for each timer and the valid range for each threshold.

Summary: Timers

Programmable by	System manager
Mode	Key, Hybrid/PBX
Idle Condition	Not required
Planning Form	
Factory Setting	See Table 4–4
Valid Entries	See Table 4–4
Inspect	No
Copy Option	No
Console Procedure	LinesTrunks→**More**→BRI→Timers→Select timer→**Drop**→Dial no. of seconds or ms→Enter→Exit→Exit
PC Procedure	[F4]→[PgUp]→[F8]→[F2]→Select timer→[Alt] + [P]→Type no. of seconds or ms→[F10]→[F5]→[F5]

Table 4–4. Timers

Timer/Counter	Purpose	Factory Setting	Valid Range	Increments
T200 Timer	maximum response time	1000 ms	500 to 5000 ms	500 ms
T203 Timer	maximum time	33 seconds	10 to 255 sec	1 sec
T303 Timer	Set up timeout	4 seconds	2 to 10 sec	1 sec
T305 Timer	Disconnect timeout	30 seconds	2 to 60 sec	1 sec
T308 Timer	Release timeout	4 seconds	2 to 10 sec	1 sec

Procedure: Timers

	Console Display/Instructions	Additional Information	PC
1	**Select the Lines and Trunks menu.**		
	System Programming: > Make a selection System Extensions SysRenumber Options Operator Tables LinesTrunks AuxEquip Exit NightSrvce		F4
2	**Go to the second screen of the Lines and Trunks menu.**		
	Lines and Trunks: > Make a selection LS/GS/DSL PRI TIE Lines Copy TT/LS Disc RemoteAccss DID Pools Exit Toll Type	Press **More**.	PgUp
3	**Select BRI.**		
	Lines and Trunks: > Make a selection HoldDiscnct LS-ID Delay PrncipalUsr ClockSync QCC Prior BRI QCC Oper Exit		F8

	Console Display/Instructions	Additional Information	PC
4	**Select Timers.**		
	BRI Lines: Make a selection SPID/DN Timers Exit		F2
5	**Select the timer to change.**		
	BRI Timer Settings: > Make a selection 35 T200 Timer T308 Timer T203 Timer T303 Timer T305 Timer Exit		
5	**Erase the current setting.**		
	(Display depends on timer/counter selected). Backspace Exit Enter	Press **Drop**.	Alt + P
6	**Enter the new setting (see Table 4–4).**		
		Dial or type [*nnnn*].	↵
7	**Save your entry.**		
	Select **Enter**.		F10
8	**Return to the System Programming menu.**		
	Select **Exit** two times.		F5 F5

Telephones

This section contains the following summaries:

- Assigning outside lines or trunks to the buttons on a telephone (including lines and trunks used for loudspeaker paging).
- Copying line button assignments from one telephone to an individual telephone or block of telephones.
- Assigning the following buttons on telephones (for Hybrid/PBX systems only):
  - System Access or Intercom Voice
  - System Access or Intercom Ring
  - System Access or Intercom Originate Only
  - Shared System or Intercom Access
- Identifying analog multiline telephones that do not have built-in speakerphones (BIS) or Hands Free Answer on Intercom (HFAI) capability.
- Identifying analog multiline telephones that require pairing of extension jacks to provide the Voice Announce to Busy, or to provide voice and data features.

See Chapter 3, “Common Administrative Procedures” for detailed information.

Assign Trunks or Pools to Telephones

Use this procedure to assign outside lines/trunks (connected to the control unit) to specific buttons on each telephone. The lines/trunks assigned to a button on a telephone are called *personal lines*.

This procedure is used only to change or add personal lines, Loudspeaker Paging, or **Pool** buttons (Hybrid/PBX only) to telephones. See “Assign Intercom or System Access Button” procedures to add or change Intercom (**Icom**) or System Access (**SA**) buttons.

Individual lines/trunks can be assigned to a maximum of 64 telephones. Individual pools can be assigned as a **Pool** button on a maximum of 64 telephones.

The following lines/trunks cannot be assigned to a button on a telephone:

- Lines/trunks used for Music On Hold
- Lines/trunks used for maintenance alarms

NOTE:
If you use equipment that rebroadcasts music or other copyrighted materials, you may be required to obtain a copyright license from and pay license fees to a third party (such as the American Society of Composers, Artists, and Producers or Broadcast Music Incorporated). Magic on Hold® requires no such license and can be purchased from AT&T.

Pool buttons cannot be assigned or removed from extensions unless the pool has trunks assigned. If all trunks are to be removed from a pool, all **Pool** button assignments must first be removed from telephones. Another way of handling this situation is to program another trunk into the pool and then remove the **Pool** button assignments from the extensions.

- **Hybrid/PBX only.** Individual lines/trunks assigned to a pool can be assigned to a button only on a DLC operator position. If one of the lines/trunks in a pool is assigned to a button on a non-DLC telephone, the result is a **Pool** button assignment.
- **Key only.** The system assigns the first eight line numbers to buttons on multiline telephones whether or not an outside line is physically connected. If a line is not connected, the button assignment must be removed so the user can assign a feature to the button.

  For the MDC 9000 and MLC-5 cordless multiline telephones and the MDW 9000 wireless multiline telephone, the system assigns the first eight lines connected to the control unit even though the telephone has fewer than eight buttons available. Remove the extra lines in system programming so that the appropriate number of lines are assigned to buttons on these telephones.

Lines and trunks are assigned to buttons in the order in which you press each line button on the system programming console or keyboard. Existing line assignments can be rearranged by removing all current assignments and then pressing the line buttons on the console or keyboard in the order that they should appear on the buttons. For information on the order of the programmed buttons, refer to the button numbers on the applicable planning form for each telephone.

If you want to reserve some blank buttons for features between line buttons, a line must be assigned as a placeholder for each blank button. After all lines are assigned, remove the lines used as placeholders on the buttons reserved for features.

Summary: Assign Trunks or Pools to Telephones

Programmable by	System manager
Mode	All, but note differences in factory settings.
Idle Condition	Telephone idle
Planning Form	Form 4b, Analog Multiline Telephone Form 4d, MLX Telephone Form 4e, MFM Adjunct: MLX Telephone Form 4f, Tip/Ring Equipment Form 5a, Direct-Line Console (DLC): Analog Form 5b, Direct-Line Console (DLC): Digital Form 5c, MFM Adjunct: DLC Data Form 1a, Modem Data Station Data Form 1b, 7500B Data Station
Factory Setting	**Key Mode.** An Intercom Ring (**ICOM Ring**) button, an Intercom Voice (**ICOM Voice**) button, and the first eight lines connected to the control unit are assigned to all analog multiline telephones, MLX telephones (excluding operator positions), and MFMs connected to MLX telephones. Two Intercom Ring buttons are assigned to single-line telephones; no outside lines are assigned. **Behind Switch Mode.** Intercom Ring, Intercom Voice, and prime line buttons are assigned to all analog multiline telephones, MLX telephones (excluding operator positions), and MFMs connected to MLX telephones. Two Intercom Ring buttons are assigned to single-line telephones; no outside lines are assigned. When prime lines are assigned to MLX extensions, lines are not assigned to MFMs used to connect adjuncts. Lines for MFMs must be assigned separately. **Hybrid/PBX Mode.** System Access Ring (**SA Ring**), System Access Voice (**SA Voice**), and System Access Originate Only (**SA Orig Only**) buttons are assigned to all analog multiline telephones and MLX telephones (excluding operator positions). Five **Call** buttons are assigned to QCC operator positions. Two System Access Ring buttons and one System Access Originate Only button are assigned to single-line telephones. No personal line or Pool buttons are assigned.
Valid Entries	Extension numbers
Inspect	Yes
Copy Option	Yes

Console Procedure	To program a single line/trunk: Extensions→Lines/Trunks→Dial ext. no.→Enter→ Entry Mode→Dial line/trunk no.→Enter→Exit→Exit To program a block of lines/trunks: Extensions→Lines/Trunks→Dial ext. no.→Enter→ Select trunk range→Toggle LED On/Off→Enter→Exit→ Exit
PC Procedure	To program a single line/trunk: [F6]→[F1]→Type ext. no.→[F10]→[F6]→Type line/trunk no. →[F10]→[F5]→[F5] To program a block of lines/trunks: [F6]→[F1]→Type ext. no.→[F10]→Select trunk range→ Toggle0 letter G On/Off→[F10]→[F5]→[F5]

Copy Line/Trunk Assignments

Use this procedure to copy outside line/trunk button assignments, pool dial-out code restrictions (Hybrid/PBX only), and (for operator positions only) Night Service information from one extension to another extension or block of extensions with identical requirements.

If you are copying assignments to a block of extensions and one of the extensions in the block is in use, the display shows the Station Busy - Pls Wait message. Copying for the rest of the extensions in the block is delayed until the busy extension becomes idle. The number of the busy extension is not shown. If a DSS is attached, the LED associated with the busy extension is on. If you exit instead of waiting for the busy extension to become idle, copying for the rest of the extensions is canceled; however, the assignments that have already been copied are not canceled.

If you are copying assignments from an operator position to a block of extensions that includes both operator and nonoperator extensions, the information is copied only to the operator positions; the nonoperator positions are not affected. Similarly, if you are copying assignments from a nonoperator position to a block of extensions that includes both operator and nonoperator extensions, the information is copied only to the nonoperator positions; the operator positions are not affected. The system does not provide an error tone to signal that the copy did not work for all of the extensions in the block.

Summary: Copy Line/Trunk Assignments

Programmable by	System manager
Mode	All
Idle Condition	Telephone idle

Planning Form	4a, Extension Copy: Analog Multiline Telephone Template 4c, Extension Copy: MLX Telephone Template
Factory Setting	Not applicable
Valid Entries	Not applicable
Inspect	Yes: lines/pools assigned to an extension.
Copy Option	Not applicable

Console Procedure	To copy to a single extension:
	`Extensions`→`Line Copy`→`Single`→Dial copy from ext. no. →`Enter`→Dial copy to ext. no.→`Enter`→`Exit`→`Exit`
	To copy to a block of extensions:
	`Extensions`→`Line Copy`→`Block`→Dial copy from ext. no. →`Enter`→Dial ext. no of first telephone in block→`Enter`→ Dial ext. no of last telephone in block→`Enter`→`Exit`→ `Exit`

PC Procedure	To copy to a single extension: F6 → F2 → F1 →Type copy from ext. no.→F10 →Type copy to ext. no.→F10 → F5 → F5 To copy to a block of extensions: F6 → F2 → F2 →Type copy from ext. no.→F10 →Type ext. no. of first telephone in block→F10 →Type ext. no. of last telephone in block→F10 → F5 → F5

Assign Intercom or System Access Buttons

Use this procedure to assign or change the assignments for Intercom (**ICOM**) buttons used to make and receive inside calls. This includes the following types of Intercom buttons:

- Ring
- Voice
- Originate Only (Ring or Voice)

In Hybrid/PBX mode only, use this procedure to assign or change assignments for System Access (**SA**) buttons used to make or receive inside and outside calls. This procedure includes the following types of System Access buttons:

- Ring
- Voice
- Originate Only (Ring or Voice)
- Shared (Ring or Voice)

NOTES:

1. You cannot change the factory setting for **Call** buttons assigned to QCC operator positions, and you cannot assign Ring, Voice, Originate Only, or Shared buttons to QCC operator positions.
2. System Access or Intercom buttons can be assigned only to the first 10 buttons on a telephone.
3. You can assign a combination of up to 10 System Access or Intercom buttons to each telephone (excluding QCC operator positions).
4. You can remove System Access or Intercom buttons, but at least one must remain on the telephone.
5. Each System Access Ring or Voice on an individual telephone can be assigned as a Shared System Access (**SSA**) button on up to 16 other telephones.

   Release 3.0 and later
   Each System Access Ring or Voice on an individual telephone can be assigned as a Shared System Access (**SSA**) button on up to 27 other telephones.
6. System Access and Intercom buttons are centrally programmed and cannot be programmed by individual telephone users.

Summary: Assign Intercom or System Access Buttons

Programmable by	System manager
Mode	All, but note differences in factory settings.
Idle Condition	Telephone idle
Planning Form	Form 4b, Analog Multiline Telephone Form 4d, MLX Telephone Form 4e, MFM Adjuncts: MLX Telephone Form 4f, Tip/Ring Equipment Form 5a, Direct-Line Console (DLC): Analog Form 5b, Direct-Line Console (DLC): Digital Form 5c, MFM Adjunct (DLC) Data Form 1a, Modem Data Station Data Form 1b, 7500B Data Station

Factory Setting	**Key Mode.** An Intercom Ring (**ICOM Ring**), an Intercom Voice (**ICOM Voice**), and the first eight lines connected to the system are assigned to all analog multiline and MLX telephones, excluding operator positions. Two Intercom Ring buttons are assigned to tip/ring equipment connected on an 012 module. An Intercom Ring and an Intercom Originate Only (**ICOM Orig Only**) button are assigned to tip/ring equipment connected by an MFM. No outside lines are assigned. **Behind Switch Mode.** An Intercom Ring, an Intercom Voice, and a prime line button are assigned to all analog multiline and MLX telephones, excluding operator positions. Two Intercom Ring buttons and a prime line button are assigned to tip/ring equipment connected to an 012 module. An Intercom Ring and an Intercom Originate Only Ring button are assigned to tip/ring equipment connected by an MFM. No outside lines are assigned. **Hybrid/PBX Mode.** System Access Ring (**SA Ring**), System Access Voice (**SA Voice**), and System Access Originate Only Ring (**SA Orig Only**) buttons are assigned to all analog multiline and MLX telephones, excluding operator positions. Two System Access Ring buttons and a System Access Originate Only Ring button are assigned to tip/ring equipment (for example, single-line telephones or fax machines connected to an 012 module). No personal line or pool buttons are assigned. **All Modes.** System Access Ring (Hybrid/PBX mode) or Intercom Ring (Key and Behind Switch modes), System Access Voice (Hybrid/PBX mode) or Intercom Voice (Key and Behind Switch modes), and the first 18 through 29 lines connected to the control unit are assigned to all DLC operator positions. The number of lines assigned depends on the type of telephone used as a DLC operator position. Refer to the appropriate telephone planning form for details.
Valid Entries	Not applicable.
Inspect	Yes: specific button options.
Copy Option	Yes. (You can copy additional **SA** buttons to another extension, but you cannot overwrite **SA** buttons that are already assigned.)

Console Procedure	To program extension: **More**→Cntr-Prg→Program Ext.→Dial ext. no.→Enter →Start→Program extension→Enter→Exit→Exit To copy extension programming: **More**→Cntr-Prg→Copy ext.→Dial copy from ext. no.→ Enter→Dial copy to ext. no.→Enter→Exit→Exit
PC Procedure	To program extension: PgUp→F4→F1→Type ext. no.→F10→Program extension→F10→F5→F5 To copy extension programming: PgUp→F4→F2→Type copy from ext. no.→F10→Type copy to ext. no.→F10→F5→F5

Analog Multiline Telephone Without Built-in Speakerphone (BIS) or Hands Free Answer on Intercom (HFAI) Capability

Use this procedure to identify analog multiline telephones with flat membrane buttons that do not have built-in speakerphones (BIS) or Hands Free Answer on Intercom (HFAI) capability. The models that must be identified are 5-Button, 10-Button, 34-Button, and 34-Button Deluxe analog multiline models with flat membrane buttons.

Keep the factory setting for analog multiline models with raised plastic buttons, including the following models: 10-Button HFAI, 34-Button with speakerphone (SP-34), 34-Button with speakerphone and display (SP-34D), BIS-10, BIS-22, BIS-34, BIS-22D, and BIS-34D.

This procedure is not necessary for MLX or single-line telephones.

Summary: Analog Multiline Telephones Without BIS or HFAI Capability

Programmable by	System manager
Mode	All
Idle Condition	Not required
Planning Form	Form 4b, Analog Multiline Telephone Form 5a, Direct-Line Console (DLC): Analog Data Form 1a, Modem Data Stations
Factory Setting	All models of analog multiline telephones (except the analog multiline display console) have BIS/HFAI capability.
Valid Entries	Extension numbers
Inspect	Yes

Copy Option	No
Console Procedure	Extensions→BIS/HFAI→Dial ext. no.→Enter→Exit→Exit
PC Procedure	F6→F8→Type ext. no.→F10→F5→F5

Analog Multiline Telephones with Voice Announce to Busy

Use this procedure to dedicate a voice or voice pair to be used to provide the Voice Announce to Busy feature to an analog multiline telephone.

The extension number associated with the first (odd-numbered) extension jack in the pair is the telephone's extension number. The extension number for the second (even-numbered) extension jack is dedicated to the Voice Announce to Busy feature. Calls cannot be placed to the extension jack reserved for the Voice Announce to Busy feature.

Voice Announce to Busy must be disabled at data stations.

NOTE:
This procedure does not apply to MLX telephones (Voice Announce to Busy is automatically provided) and cannot be programmed for single-line telephones.

Summary: Analog Multiline Telephones with Voice Announce to Busy

Programmable by	System manager
Mode	All
Idle Condition	System idle
Planning Form	Form 4b, Analog Multiline Telephone Form 5a, Direct-Line Console (DLC) Analog Data Form 1a, Modem Data Station
Factory Setting	Not applicable
Valid Entries	Extension numbers
Inspect	Yes
Copy Option	Yes
Console Procedure	Extensions→VoiceSignl→Dial ext. no.→Enter→Exit→Exit
PC Procedure	F6→F10→Type ext. no.→F10→F5→F5

Analog Multiline Telephones in Data Stations

See “Data Features.”

Auxiliary Equipment

The procedures in this section describe the steps needed to perform the following:

- Identify the line/trunk jacks used for Music on Hold, loudspeaker paging, and maintenance alarms.
- Identify the extension jacks used for fax, MERLIN MAIL, Voice Messaging System, Automated Attendant, and AUDIX Voice Power.

Music on Hold

Use this procedure to identify the line/trunk jack reserved for connection of a music source, such as a radio, tape player, or stereo system.

NOTES:

1. If you use equipment that rebroadcasts music or other copyrighted materials, you may be required to obtain a copyright license from and pay license fees to a third party [such as the American Society of Composers, Artists, and Producers (ASCAP) or Broadcast Music Incorporated (BMI)]. Magic on Hold® requires no such license and can be purchased from your AT&T dealer.
2. Only one Music on Hold line/trunk jack is allowed per system.
3. You cannot assign the line/trunk identified for Music on Hold to a line/trunk pool. If the line/trunk is currently assigned to a pool, you must remove it before you program this option.
4. You cannot assign the line/trunk identified for use with Music on Hold to a button on any telephone or as a Remote Access trunk, and you cannot use the line/trunk jack identified for Music on Hold for a loudspeaker paging system or maintenance alarm.

Summary: Music on Hold

Programmable by	System manager
Mode	All, but in Hybrid/PBX mode the line/trunk designated for Music on Hold cannot be assigned to a line/trunk pool.
Idle Condition	System idle
Planning Form	Form 2c, System Numbering: Line/Trunk Jacks
Factory Setting	Not Applicable
Valid Entries	Line/trunk number

Inspect	No
Copy Option	No
Console Procedure	AuxEquip→MusicOnHold→Dial line/trunk no.→Enter→Exit
PC Procedure	F9→F1→Type line/trunk no.→F10→F5

Procedure: Music on Hold

	Console Display/Instructions	Additional Information	PC
1	**Select the Auxiliary Equipment menu.**		
	System Programming: > Make a selection System Extensions SysRenumber Options Operator Tables LinesTrunks AuxEquip Exit NightSrvce		F9
2	**Select Music on Hold.**		
	Auxiliary Equipment: > Make a selection MusicOnHold VMS/AA Ldspkr Pg Fax MaintAlarms Exit		F1
3	**Enter the line/trunk.**		
	Music on Hold Enter music on hold line Delete Backspace Exit Enter	If the line/trunk appears on the screen and you want to remove the Music on Hold assignment, go to Step 4. Dial or type: Trunk number [*nnn*] Slot and port number *[*sspp*] Logical ID number #[*nnn*].	
4	**Assign or remove the line/trunk assignment.**		
	Select **Enter** or **Delete**.		F10 F8
5	**Return to the System Programming menu.**		
	Select **Exit**.		F5

Loudspeaker Paging

Use this procedure to identify the line/trunk jack reserved for connection of loudspeaker paging equipment.

NOTES:

1. If you use equipment that rebroadcasts music or other copyrighted materials, you may be required to obtain a copyright license from and pay license fees to a third party (such as the American Society of Composers, Artists, and Producers or Broadcast Music Incorporated). Magic on Hold ® requires no such license and can be purchased from your AT&T dealer.
2. A maximum of three single-zone or multizone loudspeaker paging systems can be connected to the system.
3. You cannot assign the line/trunk identified for loudspeaker paging equipment use to a line/trunk pool. If the line/trunk is currently assigned to a pool, you must remove it before you program this option.
4. You cannot assign the line/trunk identified for loudspeaker paging equipment use as a Remote Access line/trunk, and you cannot use its jack for Music on Hold or maintenance alarm.

Summary: Loudspeaker Paging

Programmable by	System manager
Mode	All, but in Hybrid/PBX mode the line/trunk designated for loudspeaker paging cannot be assigned to a line/trunk pool.
Idle Condition	Line/trunk idle
Planning Form	Form 2c, System Numbering: Line/Trunk Jacks
Factory Setting	Not Applicable
Valid Entries	Line/trunk numbers
Inspect	Yes
Copy Option	No
Console Procedure	AuxEquip→Ldspkr Pg→Dial line/trunk no.→Enter→Exit
PC Procedure	[F9]→[F2]→Type line/trunk no.→[F10]→[F5]

Procedure: Loudspeaker Paging

	Console Display/Instructions	Additional Information	PC
1	**Select the Auxiliary Equipment menu.**		
	System Programming: > Make a selection System Extensions SysRenumber Options Operator Tables LinesTrunks AuxEquip Exit NightSrvce		F9
2	**Select Loudspeaker Page.**		
	Auxiliary Equipment: > Make a selection MusicOnHold VMS/AA Ldspkr Pg Fax MaintAlarms Exit		F2
3	**Enter the line/trunk.**		
	Loudspeaker Page: Enter loudspeaker pg line Delete Backspace Exit Enter	If the line/trunk appears on the screen and you want to remove the loudspeaker assignment, go to Step 4. Dial or type: Trunk number [*nnn*] Slot and port number *[*sspp*] Logical ID number #[*nnn*].	
4	**Assign or remove the line/trunk assignment.**		
	Select **Enter** or **Delete**.		F10 F8
5	**Return to the System Programming menu.**		
	Select **Exit**.		F5

Fax

Use this procedure to identify the extension jacks used to connect fax machines. In addition, you can specify the extensions to receive a message-waiting indication (MWI) when a fax transmission is received, and specify the length of time before the system registers that a fax has arrived and sends the message-waiting indication.

NOTE:
Do not use this procedure for fax machines connected to analog multiline telephones with a General Purpose Adapter (GPA). In a GPA configuration features cannot be assigned to the fax independently of the telephone.

See Chapter 3, “Common Administrative Procedures,” for detailed programming procedures.

Summary: Fax

Programmable by	System manager
Mode	All
Idle Condition	Not required
Planning Form	Form 4b, Analog Multiline Telephone Form 4d, MLX Telephone Form 4e, MFM Adjunct: MLX Telephone Form 4f, Tip/Ring Equipment Form 5a, Direct-Line Console (DLC): Analog Form 5b, Direct-Line Console (DLC): Digital Form 5c, MFM Adjunct: DLC
Factory Setting	10 seconds
Valid Entries	0 to 30 seconds
Inspect	Yes
Copy Option	No
Console Procedure	`AuxEquip`→`Fax`→`Extension`→Dial ext. no.→`Enter`→`Exit`→`Msg Waiting`→Dial fax machine ext. no.→`Enter`→Dial MWI ext. no.→`Enter`→`Threshold`→**Drop**→Dial no. of seconds→`Enter`→`Exit`→`Exit`
PC Procedure	[F9]→[F3]→[F1]→Type ext. no.→[F10]→[F5]→[F2]→Type fax machine ext. no.→[F10]→Type MWI ext. no.→[F10]→[F3]→[Alt] + [P]→Type no. of seconds [F10]→[F5]→[F5]

Maintenance Alarms

Use this procedure to identify the line/trunk jack that connects an external alerting device that sounds or flashes when major maintenance problems occur.

You cannot assign the line/trunk identified for the maintenance alarm to a button on any telephone or as a Remote Access trunk, and you cannot use its line/trunk jack to connect a loudspeaker paging system or Music on Hold.

Summary: Maintenance Alarms

Programmable by	System manager
Mode	All, but in Hybrid/PBX mode, the line/trunk designated for the maintenance alarm cannot be assigned to a line/trunk pool.
Idle Condition	System idle
Planning Form	Form 2c, System Numbering: Line/Trunk Jacks
Factory Setting	Not Applicable
Valid Entries	Line/trunk number
Inspect	No
Copy Option	No
Console Procedure	`AuxEquip`→`MaintAlarms`→Dial line/trunk no.→`Enter`→`Exit`→`Exit`
PC Procedure	F9 → F4 → Type line/trunk no. → F10 → F5 → F5

Procedure: Maintenance Alarms

	Console Display/Instructions	Additional Information	PC
1	**Select the Auxiliary Equipment menu.**		

	`System Programming: >`
	`Make a selection`
	`System  Extensions`
	`SysRenumber  Options`
	`Operator  Tables`
	`LinesTrunks  AuxEquip`
	`Exit  NightSrvce`
			F9

2	**Select Maintenance Alarms.**		

	`Auxiliary Equipment:`
	`Make a selection`
	`MusicOnHold  VMS/AA`
	`Ldspkr Pg`
	`Fax`
	`MaintAlarms`
	`Exit`
			F4

	Console Display/Instructions	Additional Information	PC
3	**Enter the line/trunk jack to which the maintenance alarm is connected.**		

	`Maintenance Alarms:`
	`Enter maintenance alarm`
	`line number`
	
	`Delete`
	`Backspace`
	`Exit  Enter`
		Dial or type:
		Trunk number [*nnn*]
		Slot and port number *[*sspp*]
		Logical ID number #[*nnn*].	

4	**Assign or remove the line/trunk.**		
	Select **Enter** or **Delete**.		F10 F8
5	**Return to the System Programming menu.**		
	Select **Exit** two times.		F5 F5

Voice Messaging System and Automated Attendant

Use this procedure to specify the touch-tone duration and the interval between digits in codes sent between a voice messaging system and the communications system. The touch-tone duration and interval between digit assignment must be the same as those programmed on the voice messaging system.

This procedure specifies the integrated voice messaging ports (line/trunk jacks) used to connect voice messaging systems such as MERLIN MAIL Voice Messaging System or the AUDIX Voice Power-Integrated Solution II/III application. It also specifies the generic VMI ports (line/trunk jacks) used for automated attendants, such as AT&T Attendant or Integrated Voice Power Automated Attendant IS II/III.

In addition, this procedure can be used to specify the number of rings before a call transferred by the voice messaging system is sent to the backup position for both integrated and generic VMI ports. The number of rings cannot be programmed for individual voice messaging systems; the single setting applies for all. Use the Group Type procedure in “Optional Group Features” to assign VMI ports as either integrated or generic.

Security Alert:
See “Security Risks Associated with the Automated Attendant Feature of voice messaging systems” and “Security Risks Associated with Transferring through voice messaging systems” in Appendix A, “Customer Support Information for details on preventing toll fraud.

Summary: Voice Messaging System and Automated Attendant

Programmable by	System manager
Mode	All
Idle Condition	Not required
Planning Form	(See forms packaged with application.)
Factory Setting	Touch-tone duration: 100 ms Interval between digits: 50 ms Number of rings before transfer: 4
Valid Entries	Touch-tone duration: 50 to 200 ms, in increments of 25 ms Interval between digits: 50 to 200 ms, in increments of 25 ms Number of rings before transfer: 0 to 9
Inspect	No
Copy Option	No
Console Procedure	AuxEquip→VMS/AA→TransferRtn→**Drop**→Dial no. of rings→Enter→TT Duration→**Drop**→Dial no. of ms→Enter→TT Interval→**Drop**→Dial no. of ms→Enter→Exit→Exit
PC Procedure	F9→F6→F1→Alt + P→Type no. of rings→F10→F2→Alt + P→Type no. of ms→F10→F3→Alt + P→Type no. of ms→F10→F5→F5

Procedure: Voice Messaging System and Automated Attendant

Console Display/Instructions	Additional Information	PC
1 Select the Auxiliary Equipment menu.		
System Programming: > Make a selection System Extensions SysRenumber Options Operator Tables LinesTrunks AuxEquip Exit NightSrvce		F9
2 Select Voice Messaging/Automated Attendant.		
Auxiliary Equipment: Make a selection MusicOnHold VMS/AA Ldspkr Pg Fax MaintAlarms Exit		F6

	Console Display/Instructions	Additional Information	PC
3	**Select Transfer Return.**		
	VMS/AA: Make a selection TransferRtn TT Duration TT Interval Exit	If you do not want to change the current setting for number of rings before transfer, go to Step 7.	F1
4	**Erase the current interval setting (*x*).**		
	VMS TransferRtn Invervl: Enter return interval (0-9) *x* Backspace Exit Enter	Press **Drop**.	Alt + P
5	**Enter the number of rings before calls are transferred to the backup position (*n* = 0 to 9).**		
		Use 0 to specify that calls are not transferred to backup position. Dial or type [*n*].	
6	**Save your entry.**		
	Select **Enter**.		F10
7	**Select Touch-Tone Duration.**		
	VMS/AA: Make a selection TransferRtn TT Duration TT Interval Exit	If you do not want to change the current setting for touch-tone duration, go to Step 11.	F2
8	**Erase the current touch-tone duration setting (*xxx*).**		
	Touch-Tone Duration: Enter duration length (50-200 ms, increment 25) *xxx* Backspace Exit Enter	Press **Drop**.	Alt + P
9	**Enter the touch-tone duration in milliseconds (*nnn* = 50 to 200).**		
		Dial or type [*nnn*].	

	Console Display/Instructions	Additional Information	PC
10	**Save your entry.**		
	Select **Enter**.		F10
11	**Select Touch-Tone Interval.**		
	VMS/AA: Make a selection TransferRtn TT Duration TT Interval Exit	If you do not want to change the setting for touch-tone interval, you have finished this procedure. Go to Step 15.	F3
12	**Erase the current touch-tone interval setting (*xxx*).**		
	Touch-Tone Interval: Enter interval length (50-200 ms) *xxx* Backspace Exit Enter	Press **Drop**.	Alt + P
13	**Enter the touch-tone interval in milliseconds (*nnn* = 50 to 200).**		
		Dial or type [*nnn*].	
14	**Save your entry.**		
	Select **Enter**.		F10
15	**Return to the System Programming menu.**		
	Select **Exit** two times.		F5 F5

Optional Telephone Features

The summaries in this section detail the steps in programming the following optional features:

- Extension Language
- Pool Dial-Out Code
- Call Restrictions
- Copy Call Restrictions
- ARS Restriction Level for Extensions
- Forced Account Code Entry
- Microphone Operation
- Remote Call Forwarding
- Delayed Call Forwarding
- Trunk-to-Trunk Transfer

See Chapter 3, “Common Administrative Procedures,” for detailed information.

Extension Language

Use this procedure to change the language for an MLX telephone. It applies to Releases 1.1 and later only.

Summary: Extension Language

Programmable by	Users and system manager
Mode	All
Idle Condition	Not required
Planning Form	Form 4d, MLX Telephone Form 5b, Direct-Line Console (DLC): Digital Data Form 1b, 7500B Data Station
Factory Setting	English
Valid Entries	English, French, Spanish
Inspect	No
Copy Option	No
Console Procedure	To program a single extension: **More**→`Language`→`Extensions`→`Single`→Dial ext. no.→ `Enter`→Select a language→`Enter`→`Exit`→`Exit`

	To program a block of extensions: **More**→Language→Extensions→Block→Dial starting ext. no.→Enter→Dial ending ext. no.→Enter→Select a language→Enter→Exit→Exit
PC Procedure	To program a single extension: PgUp→F6→F2→F1→Type ext. no. →F10→Select a language→F10→[F5→F5
	To program a block of extensions: PgUp→F6→F2→F2→Type starting ext. no.→F10 →Type ending ext. no.→Select a language→F10→ F5→F5

Pool Dial-Out Code

Use this procedure to allow or restrict dialing pool dial-out codes and the placing of calls on specific line/trunk pools. Entering a pool dial-out code and then deleting that code restricts the user from using the pool associated with the entered code.

Summary: Pool Dial-Out Code

Programmable by	System manager
Mode	Hybrid/PBX
Idle Condition	Telephone idle
Planning Form	Form 4b, Analog Multiline Telephone Form 4d, MLX Telephone Form 4e, MFM Adjunct: MLX Telephone Form 4f, Tip/Ring Equipment Form 5a, Direct-Line Console (DLC): Analog Form 5b, Direct-Line Console (DLC): Digital Form 5c, MFM Adjunct (DLC): Digital Form 5d, Queued Call Console (QCC) Data Form 1a, Modem Data Station Data Form 1b, 7500B Data Station
Factory Setting	Main pool: 70; All other pools: 890 to 899. All telephones can dial any line/trunk pool dial-out code.
Valid Entries	Pool numbers
Inspect	Yes
Copy Option	No
Console Procedure	Extensions→Dial OutCd→Dial ext. no.→Enter→Dial pool dial-out code→Enter→Exit→Exit
PC Procedure	F6→F3→Type ext. no.→F10→Type pool dial-out code →F10→F5→F5

Call Restrictions

Use this procedure to change individual telephone calling restrictions to one of the following:

- Unrestricted
- Restricted from making all outgoing calls
- Restricted from making toll calls

Security Alert:
Toll fraud can occur if telephones are not properly restricted. See "Security of the System: Preventing Toll Fraud" in Appendix A for more information and security procedures.

Summary: Call Restrictions

Programmable by	System manager
Mode	All
Idle Condition	Telephone idle
Planning Form	Form 4b, Analog Multiline Telephone Form 4d, MLX Telephone Form 4e, MFM Adjunct: MLX Telephone Form 4f, Tip/Ring Equipment Form 5a, Direct-Line Console (DLC): Analog Form 5b, Direct-Line Console (DLC): Digital Form 5c, MFM Adjunct: DLC Form 5d, Queued Call Console (QCC) Data Form 1a, Modem Data Station Data Form 1b, 7500B Data Station
Factory Setting	Unrestricted
Valid Entries	Unrestricted, Outward restricted, Toll restricted
Inspect	No
Copy Option	Yes
Console Procedure	`Extensions`→`Restriction`→Dial ext. no.→`Enter`→Select restriction→`Enter`→`Exit`
PC Procedure	[F6]→[F4]→Type ext. no.→[F10]→Select restriction→[F10]→[F5]

Copy Call Restrictions

Use this procedure to copy calling restrictions, allowed lists, and disallowed lists. Feature assignment must be completed for the "copy from" extension. These features can then be copied to an individual extension or block of extensions with identical calling restriction requirements.

NOTE:
Dial-out code restrictions are not copied.

Summary: Copy Call Restrictions

Programmable by	System manager
Mode	All
Idle Condition	"Copy to" telephone(s) idle
Planning Form	Form 4b, Analog Multiline Telephone Form 4d, MLX Telephone Form 4e, MFM Adjunct: MLX Telephone Form 5a, Direct-Line Console (DLC): Analog Form 5b, Direct-Line Console (DLC): Digital Form 5c, MFM Adjunct: DLC Form 5d, Queued Call Console (QCC) Data Form 1a, Modem Data Station Data Form 1b, 7500B Data Station
Factory Setting	Not applicable
Valid Entries	Not applicable
Inspect	No
Copy Option	Not applicable

Console Procedure	To copy to a single extension:
	`Extensions`→`RestrctCopy`→`Single`→Dial copy from ext.no.→`Enter`→Dial copy to ext. no.→`Enter`→`Exit`→`Exit`→`Exit`
	To copy to a block of extensions:
	`Extensions`→`RestrctCopy`→`Block`→Dial copy from ext. no.→`Enter`→Dial first no. in copy to block→`Enter`→Dial last no.in copy to block→`Enter`→`Exit`→`Exit`→`Exit`

PC Procedure	To copy to a single extension: [F6]→[F6]→[F1]→Type copy from ext. no.→[F10]→Type copy to ext. no.→[F10]→[F5]→[F5]→[F5] To copy to a block of extensions: [F6]→[F6]→[F2]→Type copy from ext. no.→[F10]→Type first copy no. in copy to block→[F10]→[F5]→[F5]→[F5]

ARS Restriction Level For Extensions

Use this procedure to assign an ARS restriction level to an extension. Only outgoing calls are affected; users can receive inside, local, and toll calls on restricted telephones and can join any type of call in progress. In order to use a route a caller at an extension must have a Restriction Level that is equal to or greater than the Facility Restriction Level (FRL) for the route. The restriction level assigned to extensions is opposite to the FRL assigned to routes, where 0 is the most and 6 is the least restrictive.

Summary: Assigning ARS Restriction Level For an Extension

Programmable by	System manager
Mode	Hybrid/PBX only
Idle Condition	Not required
Planning Form	Form 4b, Analog Multiline Telephone Form 4d, MLX Telephone Form 4e, MFM Adjunct: MLX Telephone Form 4f, Tip/Ring Equipment Form 5a, Direct-Line Console (DLC): Analog Form 5b, Direct-Line Console (DLC): Digital Form 5c, MFM Adjunct: DLC Form 6g, Call Restriction Assignments and Lists
Factory Setting	3 (ports assigned as VMI Generic or VMI Integrated are maximally restricted with an FRL of 0)
Valid Entries	0-6, (0 is most restrictive and 6 is least restrictive)
Inspect	No
Copy Option	No
Console Procedure	`Extensions`→**More**→`ARS Restrict`→Dial ext. no.→`Enter`→**Drop**→Dial restriction level→`Enter`→`Exit`
PC Procedure	[F6]→[PgUp]→[F6]→Type ext. no.→[F10]→[Alt] + [P]→Type restriction level→[F10]→[F5]

Forced Account Code Entry

Use this procedure to assign or remove Forced Account Code Entry. When this feature is programmed on individual telephones, the user must enter a 1- to 16-digit account code before making an outside call.

Summary: Forced Account Code Entry

Programmable by	System manager
Mode	All
Idle Condition	Not required
Planning Form	Form 4b, Analog Multiline Telephone Form 4d, MLX Telephone Form 4e, MFM Adjunct: MLX Telephone Form 4f, Tip/Ring Equipment Form 5a, Direct-Line Console (DLC): Analog Form 5b, Direct-Line Console (DLC): Digital Form 5c, MFM Adjunct: DLC Form 5d, Queued Call Console (QCC) Data Form 1a, Modem Data Station Data Form 1b, 7500B Data Station
Factory Setting	Not assigned
Valid Entries	Assigned, not assigned
Inspect	Yes
Copy Option	No
Console Procedure	Extensions→Account→Toggle LED On/Off or Dial ext. no. →Enter→Exit→Exit
PC Procedure	F6→F7→Toggle letter R On/Off or Type ext. no.→F10→F5→F5

Microphone Operation

Use this procedure to enable or disable microphones on MLX telephones (except QCC operator positions). When the microphone is disabled, users cannot use the speakerphone to conduct conversations.

NOTE:
The microphone cannot be disabled on analog multiline telephones or on MLX telephones used as QCC operator positions.

Summary: Microphone Operation

Programmable by	System manager
Mode	All
Idle Condition	Not required
Planning Form	Form 4d, MLX Telephone Form 5b, Direct-Line Console (DLC): Digital
Factory Setting	Enabled
Valid Entries	Enabled, Disabled

Inspect	Yes
Copy Option	No
Console Procedure	Extensions→**More**→Mic Disable→Toggle LED On/Off or Dial ext. no.→Enter→Exit→Exit
PC Procedure	F6→PgUp→F7→Toggle letter R On/Off or Type ext. no. →F10→F5→F5

Authorization Code

Use this procedure to assign an authorization code to an extension. The authorization code can range from 2 to 11 characters and must be unique for each extension.

Summary: Authorization Codes

Programmable by	System manager
Mode	All
Idle Condition	Not required
Planning Form	Form 6h, Authorization Codes
Factory Setting	Not assigned
Valid Entries	2 - 11 characters (0 - 9, *)
Inspect	Yes
Copy Option	No
Console Procedure	Extensions→**More**→Auth Code→Dial ext. no.→Enter→ Dial Authorization Code→Enter→Exit→Exit
PC Procedure	F6→PgUp→F9→Type ext. no.→F10→Type authorization code→F10→F5→F5

Remote Call Forwarding

Use this procedure to allow or disallow the Remote Call Forwarding capability, which allows users to forward calls to an outside number.

NOTE:
This feature is not recommended unless you have ground-start trunks. See "Disconnect Signaling Reliability" and "Hold Disconnect Interval."

Security Alert:
See "Security of the System: Preventing Toll Fraud" in Appendix A for more information and security procedures on preventing toll fraud with Remote Call Forwarding.

Summary: Remote Call Forwarding

Programmable by	System manager
Mode	All
Idle Condition	Not required
Planning Form	Form 4b, Analog Multiline Telephone Form 4d, MLX Telephone Form 4e, MFM Adjunct: MLX Telephone Form 4f, Tip/Ring Equipment Form 5a, Direct-Line Console (DLC): Analog Form 5b, Direct-Line Console (DLC): Digital Form 5c, MFM Adjunct: DLC Form 5d, Queued Call Console (QCC) Data Form 1a, Modem Data Station Data Form 1b, 7500B Data Station
Factory Setting	Disallowed
Valid Entries	Disallowed, allowed
Inspect	Yes
Copy Option	No
Console Procedure	`Extensions`→**More**→`Remote Frwd`→Toggle LED On/Off or Dial ext. no.→`Enter`→`Exit`→`Exit`
PC Procedure	[F6]→[[PgUp]→[F8]→Toggle letter R On/Off or Type ext. no. →[F10]→[F5]→[F5]

Delayed Call Forwarding

Delayed Call Forwarding allows users to answer or screen a call arriving at their extension before the call is forwarded through Call Forwarding, Remote Call Forwarding, or Follow Me. The forwarding delay is the amount of time between the arrival of the call at an extension and the time the call is forwarded. This delay is measured in rings and can range from 0 to 9 rings. With the delay ring set to 0, the call is forwarded immediately. Delayed Call Forwarding is only available in Release 4.0 and later.

NOTE:
When Do Not Disturb is activated at an extension it overrides Delayed Call Forwarding and the call is forwarded immediately.

Use this procedure to assign or remove Delayed Call Forwarding from an extension. If you are assigning Delayed Call Forwarding to a group of sequential extensions, begin programming the lowest extension number to take advantage of the `Next` screen key (see “Standard Procedures”).

Summary: Delayed Call Forwarding

Programmable by	System manager
Mode	All
Idle Condition	Not required
Planning Form	Form 4b, Analog Multiline Telephone Form 4d, MLX Telephone Form 4e, MFM Adjunct: MLX Telephone Form 4f, Tip/Ring Equipment Form 5a, Direct-Line Console (DLC): Analog Form 5b, Direct-Line Console (DLC): Digital Form 5c, MFM Adjunct: DLC Form 5d, Queued Call Console (QCC) Data Form 1a, Modem Data Station Data Form 1b, 7500B Data Station
Factory Setting	0 rings
Valid Entries	0 - 9 rings
Inspect	Yes
Copy Option	No
Console Procedure	`Extensions`→**More**→`Delay Frwd`→Dial ext. no.→`Enter` →Dial no. of delay rings→`Enter`→`Exit`→`Exit`
PC Procedure	[F6]→[PgUp]→[F10]→Type ext. no.→[F10]→Type no. of delay rings→[F10]→[F5]→[F5]

Trunk-to-Trunk Transfer

Use this procedure to enable or disable trunk-to-trunk transfer at an extension. When trunk-to-trunk transfer is disabled, users cannot transfer an outside call to an outside line.

NOTE:
A single-line set can never perform a trunk-to-trunk transfer.

Summary: Trunk-to-Trunk Transfer

Programmable by	System manager
Mode	All
Idle Condition	Not required

Planning Form	Form 4b, Analog Multiline Telephone Form 4d, MLX Telephone Form 4e, MFM Adjunct: MLX Telephone Form 4f, Tip/Ring Equipment Form 5a, Direct-Line Console (DLC): Analog Form 5b, Direct-Line Console (DLC): Digital Form 5c, MFM Adjunct: DLC Form 5d, Queued Call Console (QCC) Data Form 1a, Modem Data Station Data Form 1b, 7500B Data Station
Factory Setting	Disabled
Valid Entries	Enabled, Disabled
Inspect	Yes
Copy Option	No
Console Procedure	`Extensions`→**More**→**More**→`TrkTransfer`→Toggle LED On/Off or Dial ext. no.→`Enter`→`Exit`→`Exit`
PC Procedure	[F6]→[PgUp]→[F7]→Toggle letter R On/Off or Type ext. no. →[F10]→[F5]→[F5]

Optional Operator Features

The summaries in this section affect feature programming for both DLC and QCC operator positions and include the following:

- Operator Hold Timer
- DLC Operator Automatic Hold

QCC operator features are covered in the next section.

See Chapter 3, ”Common Administrative Procedures,” for detailed programming information.

Operator Hold Timer

Use this procedure to set the length of the operator hold timer for all DLCs and QCCs. If the system operator does not pick up the call within the time programmed, an abbreviated ring reminds the operator that a call is being held.

This option cannot be programmed for individual operator positions.

Summary: Operator Hold Timer

Programmable by	System manager
Mode	All
Idle Condition	Not required
Planning Form	Form 6a, Optional Operator Features
Factory Setting	60 seconds
Valid Entries	10 to 255 seconds
Inspect	No
Copy Option	No
Console Procedure	`Operator`→`Hold Timer`→**Drop**→Dial no. of seconds→ `Enter`→`Exit`
PC Procedure	[F3]→[F3]→[Alt] + [P]→Type no. of seconds→[F10]→[F5]

DLC Operator Automatic Hold

Use this procedure to enable or disable the DLC Operator Automatic Hold feature for DLC operator positions. When this feature is enabled, it prevents accidental call disconnection.

Summary: DLC Operator Automatic Hold

Programmable by	System manager
Mode	All
Idle Condition	Not required
Planning Form	Form 6a, Optional Operator Features
Factory Setting	Disabled
Valid Entries	Disabled, Enabled
Inspect	No
Copy Option	No
Console Procedure	`Operator`→`DLC Hold`→`Automatic Hold Enable` or `Automatic Hold Disable`→`Enter`→`Exit`
PC Procedure	F3 → F4 → F1 or F2 → F10 → F5

QCC Optional Features

This section contains programming summaries for the following options for QCC operator positions:

- Hold Return
- Automatic Hold or Release
- Queue over Threshold
- Elevate Priority
- Calls-in-Queue Alert
- QCC Operator to Receive Call Types
- Call Type Queue Priority Level
- Message Center Operation
- Automatic or Manual Extended Call Completion
- Return Ring
- Position Busy Backup
- Voice Announce

NOTE:
These options are available in Hybrid/PBX mode only.

See Chapter 3, “Common Administrative Procedures,” for detailed programming information.

Hold Return

Use this procedure to determine whether calls on hold are returned to the QCC queue or remain on hold, on the QCC operator console, after the hold timer has expired twice. After the hold timer expires the first time, the operator hears an abbreviated ring as a call-on-hold reminder. If another call is received at the same time that the hold timer expires, 10 seconds are added to the programmed operator hold timer interval for the first call. If the QCC operator does not pick up a call by the time the hold timer expires twice, the call can be programmed to either remain on hold or return to the QCC queue.

This option cannot be programmed for individual QCC operator positions. The single setting applies to all QCC operator positions.

Summary: Hold Return

Programmable by	System manager
Mode	Hybrid/PBX
Idle Condition	Not required
Planning Form	Form 6a, Optional Operator Features
Factory Setting	Calls remain on hold
Valid Entries	Remain on hold, Return to QCC queue
Inspect	No
Copy Option	No
Console Procedure	`Operator`→`Queued Call`→`Hold Rtrn`→`Return to Queue` or `Remain on Hold`→`Enter`→`Exit`→`Exit`
PC Procedure	[F3]→[F2]→[F1]→[F1] or [F2]→[F10]→[F5]→[F5]

Automatic Hold or Release

Use this procedure to specify whether a call in progress (on a call button) is automatically put on hold (Automatic Hold) or disconnected (Automatic Release) when the operator presses another button.

This option cannot be programmed for individual QCC operator positions. The single setting applies to all QCC operator positions.

Summary: Automatic Hold or Release

Programmable by	System manager
Mode	Hybrid/PBX
Idle Condition	Not required
Planning Form	Form 6a, Optional Operator Features
Factory Setting	Automatic Release
Valid Entries	Auto Hold, Auto Release
Inspect	No
Copy Option	No
Console Procedure	`Operator`→`Queued Call`→`HoldRelease`→`Auto Hold` or `Auto Release`→`Enter`→`Exit`→`Exit`
PC Procedure	[F3]→[F2]→[F2]→[F1] or [F2]→[F10]→[F5]→[F5]

Queue over Threshold

Use this procedure to specify the maximum number of calls (threshold) in the QCC queue before system operators are notified with a tone that the threshold has been reached or exceeded. If the threshold is set to 0, operators are not notified.

Summary: Queue over Threshold

Programmable by	System manager
Mode	Hybrid/PBX
Idle Condition	Not required
Planning Form	Form 6a, Optional Operator Features
Factory Setting	0
Valid Entries	0 to 99
Inspect	No
Copy Option	No
Console Procedure	Operator→Queued Call→Threshold→**Drop**→Dial no. of calls→Enter→Exit→Exit
PC Procedure	F3→F2→F3→Alt + P→Type no. of calls→F10→F5→F5

Elevate Priority

Use this procedure to specify the length of time before calls waiting in the QCC queue are automatically reprioritized to a higher level. If priority is set to 0, calls are not prioritized.

Summary: Elevate Priority

Programmable by	System manager
Mode	Hybrid/PBX
Idle Condition	Not required
Planning Form	Form 6a, Optional Operator Features
Factory Setting	0 seconds
Valid Entries	0 and 5 to 30 seconds
Inspect	No
Copy Option	No

Console Procedure	Operator→Queued Call→ElvatePrior→**Drop**→Dial no. of seconds→Enter→Exit→Exit
PC Procedure	[F3]→[F2]→[F4]→[Alt] + [P]→Type no. of seconds→[F10]→[F5]→[F5]

Calls-In-Queue Alert

Use this procedure to specify whether each QCC operator is notified (with a single beep) when a new call enters the QCC queue.

Summary: Calls-In-Queue Alert

Programmable by	System manager
Mode	Hybrid/PBX
Idle Condition	Not required
Planning Form	Form 6a, Optional Operator Features
Factory Setting	Disable
Valid Entries	Enable, Disable
Inspect	Yes
Copy Option	No
Console Procedure	Operator→Queued Call→InQue Alert→Dial ext. no.→Enter→InQue Alert Enable or InQue Alert Disable→Enter→Exit→Exit
PC Procedure	[F3]→[F2]→[F6]→Type ext. no.→[F10]→[F1] or [F2]→[F10]→[F5]→[F5]

QCC Operator to Receive Call Types

Use this procedure to specify which QCC operators receive the following types of calls:

- Dial 0 calls (internal calls to the system operator)
- DID calls to invalid destinations (unassigned extension numbers)
- Calls to the Listed Directory Number (extension for the QCC queue)
- Calls programmed to return to the QCC queue (returning from directing, camped-on, held calls, and operator parked calls)
- Group Coverage calls
- Forward/Follow Me calls

The QCC queue can be a receiver for the maximum number of coverage groups (30).

Summary: QCC Operator to Receive Call Types

Programmable by	System manager
Mode	Hybrid/PBX
Idle Condition	Not required
Planning Form	Form 6a, Optional Operator Features
Factory Setting	QCC operator receives the following calls: Dial 0 Unassigned DID Listed Directory Number Returning
Valid Entries	Not applicable
Inspect	Yes
Copy Option	No
Console Procedure	`Operator`→`Queued Call`→`Call Types`→Select a call type →`Operator`→Dial coverage group no.→`Enter`→Dial ext. no.→`Enter`→`Exit`→`Exit`→`Exit`→`Exit`→`Exit`
PC Procedure	[F3]→[F2]→[F7]→Select a call type→[F2]→Type coverage group no.→[F10]→Type ext. no.→[F10]→[F5]→[F5]→[F5]→[F5]→[F5]

Call Type Queue Priority Level

Use this procedure to assign a priority value (1 to 7) that determines the order in which calls programmed to ring into the QCC queue are sent to QCC system operator positions. A value of 1 is the highest priority.

Summary: Call Type Queue Priority Level

Programmable by	System manager
Mode	Hybrid/PBX
Idle Condition	Not required
Planning Form	Form 6a, Optional Operator Features
Factory Setting	4
Valid Entries	1 to 7
Inspect	No
Copy Option	No

Console Procedure	Operator→Queued Call→Call Types→Select call type →Priority→**Drop**→Dial priority level→Enter→Exit→ Exit→Exit→Exit
PC Procedure	[F3]→[F2]→[F7]→Select call type→[F1]→[Alt] + [P]→Type priority level→[F10]→[F5]→[F5]→[F5]→[F5]

Message Center Operation

Use this procedure to designate one or more QCC operator positions to operate as a message center. The following options are automatically set for the message center position:

- Incoming calls are not directed to this position.
- Returning calls are directed to this position (return from extending and operator parked calls).
- All group coverage calls are directed to this position.
- All DID calls to invalid destinations are directed to this position.

Designating message center operation does not change any call type option programming, except that the call types mentioned above are added to the calls received at the QCC Message Center.

Summary: Message Center Operation

Programmable by	System manager
Mode	Hybrid/PBX
Idle Condition	Not required
Planning Form	Form 6a, Optional Operator Features
Factory Setting	Not applicable
Valid Entries	QCC extension numbers
Inspect	Yes
Copy Option	No
Console Procedure	Operator→Queued Call→Msg Center→Dial ext. no.→ Enter→Exit→Exit→Exit
PC Procedure	[F3]→[F2]→[F8]→Type ext. no.→[F5]→[F5]→[F5]

Extended (Directed) Call Completion

Use this procedure to specify one of the two basic options shown below for QCC operator positions with a DSS only:

- **Automatic Completion**. Allows one-touch call transfer; that is, calls are transferred by touching only an extension button on the DSS. The operator does not have to press the **Release** button.
- **Manual Completion**. QCC operators must press the **Release** button to direct a call using a DSS.

This option cannot be programmed for individual QCC operator positions. The setting applies to all QCC operator positions.

Summary: Extended Call Completion

Programmable by	System manager
Mode	Hybrid/PBX
Idle Condition	Not required
Planning Form	Form 6a, Optional Operator Features
Factory Setting	Automatic Extended Completion
Valid Entries	Automatic, Manual
Inspect	No
Copy Option	No
Console Procedure	`Operator`→`Queued Call`→`ExtndComplt`→`Automatic Complete` or `Manual Complete`→`Enter`→`Exit`→`Exit`
PC Procedure	F3 → F2 → F9 → F1 or F2 → F10 → F5 → F5

Return Ring

Use this procedure to specify the number of rings before an unanswered directed call is returned to the QCC queue or QCC Message Center position.

This option cannot be programmed for individual QCC operator positions. The setting applies to all QCC operator positions.

NOTE:
If you want unanswered calls to proceed to voice mail, lengthen the return ring setting.

Summary: Return Ring

Programmable by	System manager
Mode	Hybrid/PBX
Idle Condition	Not required
Planning Form	Form 6a, Optional Operator Features
Factory Setting	4 rings
Valid Entries	1 to 15 rings
Inspect	No
Copy Option	No
Console Procedure	Operator→Queued Call→Return Ring→**Drop**→Dial no. of rings→Enter→Exit→Exit
PC Procedure	F3→F2→F10→Alt + P→Type no. of rings→F10→F5→F5

Position Busy Backup

Use this procedure to designate the calling group to provide the backup position for the QCC queue. The specified calling group will receive incoming calls when all QCC operator positions are in position-busy mode.

Position Busy Backup is programmed for the QCC queue rather than for individual QCC operator positions. The calling group designated as the QCC queue backup serves as the backup for the Remote Access feature and as backup when the QCC is being used as the system programming console.

Only one Position Busy Backup can be programmed per system.

Summary: Position Busy Backup

Programmable by	System manager
Mode	Hybrid/PBX
Idle Condition	Not required
Planning Form	Form 6a, Optional Operator Features
Factory Setting	No backup
Valid Entries	Calling group number
Inspect	No
Copy Option	No
Console Procedure	Operator→Queued Call→**More**→QCC Backup→**Drop**→Dial ext. number→Enter→Exit→Exit
PC Procedure	F3→F2→PgUp→F1→Alt + P→Type ext. number→F10→F5→F5

Voice Announce

Use this procedure to enable or disable Voice Announce for the QCC. Voice Announce is only available on a QCC in Release 4.0 and later.

When Voice Announce is enabled, every QCC in the system has one Voice Announce **Call** button, the **Call 5** (Ring/Voice) button. All Intercom calls that originate from a QCC **Call 5** (Ring/Voice) button are delivered as Voice Announce calls.

When Voice Announce is disabled, all Intercom calls originating at the QCC **Call** buttons are Intercom Ringing calls.

Summary: Voice Announce

Programmable by	System manager
Mode	Hybrid/PBX
Idle Condition	Not required
Planning Form	Form 6a, Optional Operator Features
Factory Setting	Disabled
Valid Entries	Disabled, Enabled
Inspect	No
Copy Option	No
Console Procedure	Operator→Queued Call→**More**→Voice Annc→Enabled or Disabled→Enter→Exit→Exit
PC Procedure	F3→F2→PgUp→F2→F1 or F2→F10→F5→F5

Optional Group Features

This section contains programming summaries for the following optional features:

- Call Pickup Groups
- Group Paging
- Group Coverage Member Assignments
- Group Coverage Delay Interval
- Group Calling Member Assignments
- Group Calling Line/Trunk or Pool Assignments

See Chapter 3, “Common Administrative Procedures,” for detailed programming information.

Call Pickup Groups

Use this procedure to assign or remove an extension from a call pickup group. A call pickup group consists of telephone users who can answer one another’s calls by pressing a button or by dialing a code.

NOTES:

1. A maximum of 30 call pickup groups, with a maximum of 15 extensions per group, are allowed.
2. An extension can belong to only one group.
3. Before reassigning an extension to a new group, you must remove it from its current group.

Summary: Call Pickup Groups

Programmable by	System manager
Mode	All
Idle Condition	Not required
Planning Form	Form 7a, Call Pickup Groups
Factory Setting	Not applicable
Valid Entries	Call pickup group number, extension number
Inspect	Yes
Copy Option	No

Console Procedure	Extensions→Call Pickup→Dial pickup group no.→ Enter→Dial ext. no.→Enter→Enter→Exit→Exit
PC Procedure	F6 →F9 →Type pickup group no.→F10 →Type ext. no. →F10 →F5 →F5

Group Paging

Use this procedure to assign or remove an extension from a paging group. A paging group consists of telephone users who hear common announcements over the telephone speakerphone. Only MLX telephones and analog multiline telephones with speakerphones can be members of a paging group.

A maximum of six paging groups with a maximum of 10 extensions per group is allowed. A seventh paging group, called the Page All group, is not limited and includes all telephones connected to the system. Extensions cannot be added to or removed from the Page All group.

To reassign an extension to a new paging group, just assign it; the extension is automatically removed from its old paging group.

Summary: Group Paging

Programmable by	System manager
Mode	All
Idle Condition	Not required
Planning Form	Form 7b, Group Paging
Factory Setting	Not applicable
Valid Entries	Extension number
Inspect	Yes
Copy Option	No
Console Procedure	Extensions→**More**→Group Page→Dial paging group no. →Enter→Dial ext. no.→Enter→Exit→Exit
PC Procedure	F6 →PgUp →F2 →Type paging group no.→F10 →Type ext. no.→F10 →F5 →F5

Group Coverage Member Assignments

Use this procedure to assign or remove an extension from a coverage group. A coverage group is a group of senders. Coverage is an arrangement in which calls from a group of senders are redirected to one or more receivers.

NOTE:
This procedure assigns *senders*. Before you begin, make certain that the *receivers* for the coverage group are also programmed. Receivers can be assigned through individual or centralized telephone programming. You can also use the Integrated Solution III/IV feature, Integrated Administration, to assign coverage receivers. See Chapter 4, “Centralized Telephone Programming,” for information about the appropriate centralized programming procedure.

A maximum of 30 coverage groups are allowed, each with an unlimited number of members. Up to eight receivers can be assigned per coverage group.

An extension can be a sender in only one group; it can be a receiver for more than one coverage group. A calling group can be assigned as a receiver for a coverage group (see “Group Coverage Receiver”). In Hybrid/PBX mode only, the QCC queue can be a receiver for up to 30 coverage groups. See “QCC Operator to Receive Calls.”

If the sender’s extension has one or more personal lines assigned, the sender can be assigned as the principal user so that calls received on the personal line are sent to receivers programmed for Individual or Group Coverage. See “Principal User for Personal Line.”

To reassign an extension to a new coverage group, just make the assignment; the extension is automatically removed from its old group.

Summary: Group Coverage Member Assignments

Programmable by	System manager
Mode	All
Idle Condition	Not required
Planning Form	Form 7c, Group Coverage
Factory Setting	Not applicable
Valid Entries	Extension numbers
Inspect	Yes
Copy Option	No

Console Procedure	Extensions→**More**→Group Cover→Dial group no.→Enter→Dial ext. no.→Enter→Exit→Exit
PC Procedure	F6→PgUp→F3→Type group no.→F10→Type ext. no.→F10→F5→F5

Group Coverage Delay Interval

Use this procedure to specify the number of rings before a call is sent to group coverage receivers.

Summary: Group Coverage Delay Interval

Programmable by	System manager
Mode	All
Idle Condition	Not required
Planning Form	Form 7c, Group Coverage
Factory Setting	Not applicable
Valid Entries	Extension numbers
Inspect	Yes
Copy Option	No
Console Procedure	Options→**More**→Cover Delay→**Drop**→Enter→Dial the number of rings→Enter→Exit
PC Procedure	F7→PgUp→F6→Alt + P→Type the number of rings→F10→F5

Group Calling Member Assignments

Use this procedure to assign or remove an extension from a calling group. A calling group is used to direct calls to a group of people who all handle the same type of call. A single extension number is assigned to the group and is used by both inside and outside callers to reach the group.

To reassign an extension to a new calling group, you must remove it from its old group before programming the new assignment.

NOTES:

1. If a linear hunting pattern is indicated on the back of the system planning form (6d), be sure to assign extensions to the group in the exact order that they are shown on the form. The system searches for an available member in the order in which you assign the extensions to the group.
2. A maximum of 32 calling groups with a maximum of 20 extensions per group is allowed.
3. An extension can belong to only one calling group. A QCC cannot be a member of a calling group. The delay announcement device should not be programmed as a calling group member.
4. The extension status feature must be set to the Calling Group or CMS mode before you assign members to the group. See “Extension Status.”

Summary: Group Calling Member Assignments

Programmable by	System manager
Mode	All
Idle Condition	Not required
Planning Form	Form 7c, Group Coverage
Factory Setting	Not applicable
Valid Entries	Extension numbers
Inspect	Yes
Copy Option	No
Console Procedure	Extensions→**More**→Grp Calling→Members→Dial calling group ext. no.→Enter→Dial ext. no.→Enter→Exit→Exit→Exit
PC Procedure	[F6]→[PgUp]→[F4]→[F9]→Type calling group ext. no.→[F10]→Type ext. no.→[F10]→[F5]→[F5]→[F5]

Group Calling Line/Trunk or Pool Assignments

Use this procedure to assign or remove lines, trunks, or pools (Hybrid/PBX only) that ring directly into a calling group.

Incoming calls on each line/trunk or pool can be directed to only one calling group.

To reassign a line/trunk or pool to a new calling group, you must remove it from its old group before making the new assignment.

Summary: Group Calling Line/Trunk or Pool Assignments

Programmable by	System manager
Mode	All
Idle Condition	Not required
Planning Form	Form 7d, Group Calling
Factory Setting	Not applicable
Valid Entries	Line, trunk, or pool number
Inspect	Yes
Copy Option	No
Console Procedure	`Extensions`→**More**→`Grp Calling`→`Line/Pool`→Dial calling group ext. no.→`Enter`→Dial line/trunk no.→`Enter`→`Exit`→`Exit`→`Exit`
PC Procedure	[F6]→[PgUp]→[F4]→[F10]→Type calling group ext. no.→[F10]→Type line/trunk no.→[F10]→[F5]→[F5]→[F5]

Optional Group Calling Features

This section includes programming summaries for the following optional group calling features:

- Hunt Type
- Group Calling Delay Announcement
- Group Coverage Receiver
- Group Calling Overflow and Thresholds
- Group Calling Message-Waiting Indicator
- Group Calling Calls-in-Queue Alarm Threshold
- Group Calling External Alert for Calls-in-Queue Alarm
- Group Type

See Chapter 3, “Common Administrative Procedures,” for detailed programming information.

Hunt Type

Use this procedure to assign one of the following hunt-type patterns to calling groups:

- **Circular Hunting Pattern**. The system distributes calls to group members by hunting in a circular pattern for the first available extension after the one that received the last call to the group.
- **Linear Hunting Pattern**. The system searches for an available group member in the order in which the extensions were assigned to the calling group.

Summary: Hunt Type

Programmable by	System manager
Mode	All
Idle Condition	Not required
Planning Form	Form 7d, Group Calling
Factory Setting	Circular hunting pattern
Valid Entries	Circular, Linear
Inspect	No
Copy Option	No

Console Procedure	Extensions→**More**→Grp Calling→Hunt Type→Dial calling group ext. no.→Enter→Circular or Linear→Enter→Exit→Exit→Exit
PC Procedure	[F6]→[PgUp]→[F4]→[F1]→Type calling group ext. no.→[F10]→[F1] or [F2]→[F10]→[F5]→[F5]

Group Calling Delay Announcement

Use this procedure to designate the announcement device used to play messages to callers while they are waiting in the queue.

Only one announcement device can be designated for each calling group; however, more than one calling group can use the same announcement device. The extension to which the delay announcement device is connected should not be programmed as a calling group member.

If the extension jack or MFM was previously programmed as a regular extension, you must remove all line/trunk button assignments before you designate the extension jack as a delay announcement device.

Summary: Group Calling Delay Announcement

Programmable by	System manager
Mode	All
Idle Condition	Not required
Planning Form	Form 7d, Group Calling
Factory Setting	No delay announcement devices are assigned
Valid Entries	Announcement, No announcement
Inspect	No
Copy Option	No
Console Procedure	Extensions→**More**→Grp Calling→DelayAnnce→Dial calling group ext. no.→Enter→ Dial ext. no. of announcement device→Enter→Exit→Exit
PC Procedure	[F6]→[PgUp]→[F4]→[F2]→Type calling group ext. no.→[F10]→Type ext. no. of announcement device→[F10]→[F5]→[F5]

Group Coverage Receiver

Use this procedure to assign or remove a calling group as a receiver for a coverage group.

Calling group member assignments must be made before you assign the group as a receiver for a coverage group.

NOTE:
Integrated Administration uses calling group 30 as the default group to cover AUDIX Voice Power.

Summary: Group Coverage Receiver

Programmable by	System manager, Integrated Administration
Mode	All
Idle Condition	Not required
Planning Form	Form 7c, Group Coverage
Factory Setting	Not applicable
Valid Entries	Group numbers
Inspect	Yes
Copy Option	No
Console Procedure	`Extensions`→**More**→`Grp Calling`→`Grp Coverage`→Dial calling group ext. no.→`Enter`→Dial coverage group no.→ `Enter`→`Exit`→`Exit`→`Exit`
PC Procedure	[F6]→[PgUp]→[F4]→[F3]→Type calling group ext. no.→ Type coverage group no.→[F10]→[F5]→[F5]→[F5]

Group Calling Overflow and Thresholds

Use this procedure to designate either another calling group or the QCC queue (Hybrid/PBX only) to receive calls when the number of calls waiting in the queue for a calling group is equal to or greater than the programmed threshold or when the time that a call has spent in the queue exceeds the programmed timeout value.

Overflow coverage can be provided only by calling groups or the QCC queue (Hybrid/PBX only), not by individual extensions. Group members can be notified when the number of calls waiting in the queue reaches the threshold.

A calling group or the QCC queue (Hybrid/PBX only) can provide overflow coverage for more than one calling group; however, which group's calls go to an available member in the overflow calling group is unpredictable.

The factory-set extension number for the QCC Listed Directory Number is 800.

Summary: Group Calling Overflow and Thresholds

Programmable by	System manager
Mode	All
Idle Condition	Not required
Planning Form	Form 7d, Group Calling
Factory Setting	Overflow coverage: none Threshold: 1 call Timeout: 0 sec
Valid Entries	Overflow coverage: Backup extension number Threshold: 1 to 99 calls Timeout: 0 to 900 seconds
Inspect	No
Copy Option	No
Console Procedure	`Extensions`→**More**→`Grp Calling`→`Overflow`→Dial calling group ext. no.→`Enter`→Dial ext. no.→`Enter`→`Number Based Overflow`→**Drop**→Dial no. of calls→`Enter`→`Time Based Overflow`→**Drop**→Dial no. of seconds→`Enter`→`Exit`→`Exit`
PC Procedure	[F6]→[PgUp]→[F4]→[F8]→Type calling group ext. no.→[F10]→Type backup ext. no.→[F10]→[F1]→[Alt] + [P]→Type no. of call→[F10]→[F2]→[Alt] + [P]→Type no. of seconds→[F10]→[F5]→[F5]

Group Calling Message-Waiting Indicator

Use this procedure to designate the extension that will receive message-waiting indications (MWIs) for the calling group.

Only one extension can be designated as a message-waiting receiver for each calling group; however, more than one calling group can use the same message-waiting receiver. The extension assigned as a message-waiting receiver does not have to be a member of the calling group.

Message-waiting indications cannot be sent to the extension assigned to the group unless this option is programmed. The message-waiting receiver cannot distinguish between messages left for the calling group and personal messages.

Summary: Group Calling Message-Waiting Indicator

Programmable by	System manager
Mode	All
Idle Condition	Not required
Planning Form	Form 7d, Group Calling
Factory Setting	No message-waiting receiver assigned
Valid Entries	Extension number
Inspect	No
Copy Option	No
Console Procedure	`Extensions`→**More**→`Grp Calling`→`Message`→Dial calling group ext. no.→`Enter`→Dial ext. no. for MWI receiver→`Enter`→`Exit`→`Exit`
PC Procedure	[F6]→[PgUp]→[F4]→[F4]→Type calling group ext. no.→[F10]→Type ext. no. for MWI receiver→ [F10]→[F5]→[F5]

Group Calling Calls-In-Queue Alarm Threshold

Use this procedure to specify the number of unanswered calls that wait in the calling group queue before group members are notified with either an external alert or a light on the telephone. Group members are notified when the number of calls waiting in the queue is equal to or greater than the programmed threshold.

Summary: Group Calling Calls-In-Queue Alarm Threshold

Programmable by	System manager
Mode	All
Idle Condition	Not required
Planning Form	Form 7d, Group Calling
Factory Setting	1 call
Valid Entries	1 to 99
Inspect	No
Copy Option	No
Console Procedure	`Extensions`→**More**→`Grp Calling`→`Queue Alarm`→Dial calling group ext. no.→`Enter`→**Drop**→Dial no. of calls→`Enter`→`Exit`→`Exit`
PC Procedure	[F6]→[PgUp]→[F4]→[F6]→Type calling group ext. no.→[F10]→[Alt] + [P]→Type no. of calls→[F10]→[F5]→[F5]

Group Calling External Alert for Calls-In-Queue Alarm

Use this procedure to designate the external alert device used to notify calling group members when the number of calls in the queue reaches the programmed threshold.

Only one external alert device can be designated for each calling group. Since the external alert signal is continuous, it is recommended that only light-type external alert devices be designated for the Calls-in-Queue alarm.

Summary: Group Calling External Alert for Calls-In-Queue Alarm

Programmable by	System manager
Mode	All
Idle Condition	Not required
Planning Form	Form 7d, Group Calling
Factory Setting	Not applicable
Valid Entries	Extension number
Inspect	No
Copy Option	No
Console Procedure	`Extensions`→**More**→`Grp Calling`→`Xtnl Alert`→Dial calling group ext. no.→`Enter`→**Drop**→Dial ext. no. for alert→`Enter`→`Exit`→`Exit`
PC Procedure	[F6]→[PgUp]→[F4]→[F7]→Type calling group ext. no.→[F10]→[Alt] + [P]→Type ext. no. for alert→[F10]→[F5]→[F5]

Group Type

Use this procedure to determine whether or not the system automatically logs in members of a calling group after a power failure. This setting also determines the type of voice messaging interface when the calling group is used to connect voice messaging or automated attendant applications. The settings are listed below.

- **Automatic Log Out**. Used for calling groups to specify that the system does not automatically log in calling group members after a power failure. Calling group members must manually log themselves into the group.
- **Automatic Log In**. Used for calling groups that consist of fax machines or data stations (also called data hunt groups) to specify that the system automatically logs in calling group members after a power failure. This setting can also be used for calling groups consisting of telephones.
- **Integrated VMI**. Used when a voice messaging system that requires special signaling for integrated operation (for example, AUDIX Voice Power, IS II/III, or MERLIN MAIL Voice Messaging System) is connected to one or more extension jacks assigned to a calling group. The system automatically logs in the group members after a power failure.
- **Generic VM**. Used when a voice messaging system that does not need special signaling (for example, AT&T Attendant) is connected to one or more extension jacks assigned to a calling group. The system automatically logs in the group members after a power failure.

Summary: Group Type

Programmable by	System manager
Mode	All
Idle Condition	Not required
Planning Form	Form 7d, Group Calling
Factory Setting	Automatic Log Out
Valid Entries	Automatic log in, Automatic log out, Integrated VMI,Generic VMI
Inspect	No
Copy Option	No
Console Procedure	`Extensions`→**More**→`Grp Calling`→**More**→`Group`→Type Dial calling group ext. no.→`Enter`→Specify login type→ `Enter`→`Enter`→`Exit`→`Exit`→`Exit`
PC Procedure	[F6]→[PgUp]→[F4]→[PgUp]→Type calling group ext. no→ Specify login type→[F10]→[F5]→[F5]→[F5]

System Features

This section contains programming summaries for the optional system features that affect all or most system users and includes the following:

- Transfer Return Time
- One-Touch Transfer/Hold
- Transfer Audible
- Type of Transfer
- Camp-On Return Time
- Call Park Return Time
- Delay Ring Interval
- Automatic Callback Interval
- Extension Status
- SMDR Language
- SMDR Call Report Format
- SMDR Call Length
- SMDR Calls Recorded on Call Report
- SMDR Account Code Format
- Inside Dial Tone
- Reminder Service Cancel
- Redirect Outside Calls to Unassigned Extension Numbers
- Host System Dial Codes for Behind Switch Mode
- Recall Timer
- Allowed Lists
- Assign Allowed Lists to Telephones
- Disallowed Lists
- Assign Disallowed Lists to Telephones

See Chapter 3, “Common Administrative Procedures,” for detailed programming information.

Transfer Return Time

Use this procedure to specify the number of times the telephone rings before a call transferred to another inside telephone is returned to the originator. A setting of 0 means that transferred calls are never returned to the originator.

NOTE:
The transfer return time should not be set to 0 in a system with single-line telephones.

Summary: Transfer Return Time

Programmable by	System manager
Mode	All
Idle Condition	Not required
Planning Form	Form 8a, System Features
Factory Setting	4 rings (Integrated Administration: 6 rings)
Valid Entries	0 to 9 rings
Inspect	No
Copy Option	No
Console Procedure	Options→Transfer→Return Time→**Drop**→Dial no. of rings→Enter→Exit→Exit
PC Procedure	F7→F1→F1→Alt + P→Type no. of rings→F10→F5→F5

One-Touch Transfer/One-Touch Hold

Use this procedure to assign the One-Touch Transfer or One-Touch Hold feature.

One-Touch Transfer allows users to initiate transfers to another extension by pressing an Auto Dial or DSS button for that extension. If the One-Touch Transfer feature is assigned, you must also specify whether the transfer completion is manual (the user has to press another button to complete the transfer) or automatic (the transfer is completed automatically).

The One-Touch Transfer feature is not available on single-line telephones.

One-Touch Hold applies to incoming central office calls only. When the user presses an Auto Dial or DSS button to initiate a transfer, the outside caller is put on hold. The system automatically selects an intercom facility and dials the transfer destination. There is no transfer return function with this method. Consequently, if the transfer destination does not answer or is busy, the user who initiates the transfer must notify the outside caller, or the outside caller will remain on hold.

One-Touch Hold is the factory setting in Behind Switch mode only.

Summary: One-Touch Transfer/Hold

Programmable by	System manager
Mode	All
Idle Condition	Not required
Planning Form	Form 8a, System Features
Factory Setting	One-Touch Transfer, automatic completion (One-Touch Hold is the factory setting in Behind Switch mode.)
Valid Entries	Transfer, Hold
Inspect	No
Copy Option	No

Console Procedure	To program One-Touch Transfer:
	`Options→Transfer→One Touch→Transfer→Enter→Manual` or `Automatic→Enter→Exit→Exit`
	To program One-Touch Hold:
	`Options→Transfer→One Touch→Hold→Enter→Exit→Exit`

PC Procedure	To program One-Touch Transfer: [F7]→[F1]→[F2]→[F1]→[F10]→[F1] or [F2]→[F10]→[F5]→[F5] To program One-Touch Hold: [F7]→[F1]→[F2]→[F2]→[F10]→[F5]→[F5]

Transfer Audible

Use this procedure to specify whether an outside caller hears ringing (also called ringback) or Music On Hold while being transferred. Inside callers always hear ringback during a transfer.

NOTE:
If you use equipment that rebroadcasts music or other copyrighted materials, you may be required to obtain a copyright license from and pay license fees to a third party (such as the American Society of Composers, Artists, and Producers or Broadcast Music Incorporated). Magic on Hold requires no such license and can be purchased from AT&T.

Summary: Transfer Audible

Programmable by	System manager
Mode	All
Idle Condition	Not required
Planning Form	Form 8a, System Features
Factory Setting	Music on Hold
Valid Entries	Music on Hold, Ringback
Inspect	No
Copy Option	No
Console Procedure	`Options`→`Transfer`→`Audible`→`Music on Hold` or `Ringback`→`Enter`→`Exit`→`Exit`
PC Procedure	F7 → F1 → F3 → F1 or F2 → F10 → F5 → F5

Type of Transfer

Use this procedure to specify whether the system automatically selects an Intercom or System Access Ring or Voice button when the **Transfer** button, or an Auto Dial or DSS button (for One-Touch Transfer) is pressed.

Summary: Type of Transfer

Programmable by	System manager
Mode	All
Idle Condition	Not required
Planning Form	Form 8a, System Features
Factory Setting	Ring button (Intercom or System Access) is automatically selected
Valid Entries	Voice Announce, Ring
Inspect	No
Copy Option	No
Console Procedure	`Options`→`Transfer`→`Type`→`Voice Announce` or `Ring`→`Enter`→`Exit`→`Exit`
PC Procedure	F7 → F1 → F4 → F1 or F2 → F10 → F5 → F5

Camp-On Return Time

Use this procedure to specify the number of seconds before a camped-on call (a call transferred to a busy telephone with the Camp-On feature) is returned to the originator.

Summary Camp-On Return Time:

Programmable by	System manager
Mode	All
Idle Condition	Not required
Planning Form	Form 8a, System Features
Factory Setting	90 seconds
Valid Entries	30 to 300 seconds, in 10-second increments
Inspect	No
Copy Option	No
Console Procedure	Options→CampOn→**Drop**→Dial no. of seconds→Enter→Exit
PC Procedure	[F7]→[F2]→[Alt] + [P]→Type no. of seconds→[F10]→[F5]

Call Park Return Time

Use this procedure to specify the number of seconds before a call put on hold with the Park feature is returned to the originator.

Summary: Call Park Return Time

Programmable by	System manager
Mode	All
Idle Condition	Not required
Planning Form	Form 8a, System Features
Factory Setting	180 seconds
Valid Entries	30 to 300 seconds, in 10-second increments
Inspect	No
Copy Option	No
Console Procedure	Options→CallParkRtn→**Drop**→Dial no. of seconds→Enter→Exit
PC Procedure	[F7]→[F3]→[Alt] + [P]→Type no. of seconds→[F5]→[F5]

Delay Ring Interval

Use this procedure to specify the number of rings for the delay ring interval. The delay ring interval is applied when a primary, secondary, or group cover button is set to delayed ring.

Summary: Delay Ring Interval

Programmable by	System manager
Mode	All
Idle Condition	Not required
Planning Form	Form 7c, Group Coverage
Factory Setting	2 rings
Valid Entries	1 to 6 rings
Inspect	No
Copy Option	No
Console Procedure	Options→Delay Ring→**Drop**→Dial no. of rings→Enter →Exit
PC Procedure	F7→F4→Alt + P→Type no. of rings→F10→F5

Automatic Callback Interval

Use this procedure to specify the number of times the telephone rings at the originator's telephone before the system cancels a Callback request.

Summary: Automatic Callback Interval

Programmable by	System manager
Mode	All
Idle Condition	Not required
Planning Form	Form 8a, System Features
Factory Setting	3 rings
Valid Entries	1 to 6 rings
Inspect	No
Copy Option	No
Console Procedure	Options→Callback→**Drop**→Dial no. of rings→Enter→ Exit
PC Procedure	F7→F6→Alt + P→Type no. of rings→F10→F5

Extension Status

Use this procedure to specify whether the Extension Status (ES) feature is used in Hotel mode or Group Calling/Call Management System (CMS) mode.

The calling mode affects the meaning of the LEDs and the use of Auto Dial or DSS buttons when the DLC operator position is in Extension Status mode.

In Hotel mode, telephones are restricted from making calls in Extension Status states 1 and 2 (ES1 and ES2). In Group Calling/CMS mode, ES states reflect member or agent status without restricting the telephones. In the Group Calling/CMS mode, the Extension Status feature is used by the agents to log in and out, and by the supervisor to see agent status.

Summary: Extension Status

Programmable by	System manager
Mode	All
Idle Condition	Not required
Planning Form	Form 8a, System Features
Factory Setting	Group Calling/CMS mode
Valid Entries	Group Calling/CMS mode, Hotel mode
Inspect	No
Copy Option	No
Console Procedure	`Options`→`Ext Status`→`Hotel` or `GrpCall/CMS`→`Enter`→`Exit`
PC Procedure	F7 → F7 → F1 or F2 → F10 → F5

SMDR Language

Use this procedure to change the language of the SMDR reports. It applies to Releases 1.1, 2.0, 2.1 and 3.0 only. The default report language is the same as that set for the system language. See “System Language.”

Summary: SMDR Language

Programmable by	System manager
Mode	All
Idle Condition	Not required
Planning Form	Form 1, System Planning
Factory Setting	English (matches System Language setting)
Valid Entries	English, French, Spanish
Inspect	No
Copy Option	No
Console Procedure	**More**→Language→SMDR→Select language→Enter→Exit
PC Procedure	PgUp→F6→F3→Select language →F10→F5

SMDR Call Report Format

Use this procedure to specify whether the SMDR call reports are printed in Basic format or ISDN format. In ISDN format, automatic number identification (ANI) information appears in the Calling Number field in place of IN (which appears in the Basic report format). The call recording type for these calls is 1 in ISDN format and V in Basic format.

ISDN format should be used only in conjunction with automatic number identification (ANI) or Caller ID service subscription.

Summary: SMDR Call Report Format

Programmable by	System manager
Mode	All
Idle Condition	Not required
Planning Form	Form 8a, System Features
Factory Setting	Basic format
Valid Entries	Basic, ISDN
Inspect	No
Copy Option	No
Console Procedure	Options→SMDR→Format→Basic SMDR or ISDN SMDR→Enter→Exit→Exit
PC Procedure	F7→F8→F1→F1 or F2→F10→F5→F5

SMDR Call Length

Use this procedure to set the minimum time length of a call before it is recorded on SMDR call reports.

NOTE:
If the majority of lines/trunks are PRI, the recommended call length is 1. See *Feature Reference* for more information.

Summary: SMDR Call Length

Programmable by	System manager
Mode	All
Idle Condition	Not required
Planning Form	Form 8a, System Features
Factory Setting	Basic format
Valid Entries	Basic, ISDN
Inspect	No
Copy Option	No
Console Procedure	`Options`→`SMDR`→`Format`→`Basic SMDR` or `ISDN SMDR`→ `Enter`→`Exit`→`Exit`
PC Procedure	F7 → F8 → F1 → F1 or F2 → F10 → F5 → F5

SMDR Calls Recorded on Call Report

Use this procedure to specify whether SMDR information should be recorded for both incoming and outgoing calls or for outgoing calls only.

Summary: SMDR Calls Recorded on Call Report

Programmable by	System manager
Mode	All
Idle Condition	Not required
Planning Form	Form 8a, System Features
Factory Setting	Incoming and outgoing
Valid Entries	In/Out, Out Only
Inspect	No
Copy Option	No
Console Procedure	`Options`→`SMDR`→`Call Report`→`In/Out` or `Out Only`→ `Enter`→`Exit`→`Exit`
PC Procedure	F7 → F8 → F3 → F1 or F2 → F10 → F5 → F5

SMDR Account Code Format

For calls made using an authorization code, SMDR can be programmed to either have the “home extension” or the actual authorization codes recorded in the Account Code field if no Account Code is entered. Account Code overrides the Authorization Code entry in the SMDR record when both features are used.

Summary: SMDR Account Code Format

Programmable by	System manager
Mode	All
Idle Condition	Not required
Planning Form	Form 8a, System Features
Factory Setting	Home Extension Number
Valid Entries	Home Extension Number, Authorization Code
Inspect	No
Copy Option	No
Console Procedure	Options→SMDR→Auth Code→Home Extesnion Number or Authorization Code→Enter→Exit→Exit
PC Procedure	F7→F8→F6→F1 or F2→F10→F5→F5

Inside Dial Tone

Use this procedure to set the inside (system) dial tone to be either different from, or the same as, the outside line/trunk dial tone.

NOTE:
The inside dial tone must be the same as the outside dial tone when the internal dial tone is not recognized by software applications or modems.

Summary: Inside Dial Tone

Programmable by	System manager
Mode	All
Idle Condition	Not required
Planning Form	Form 8a, System Features
Factory Setting	Inside dial tone is different from outside dial tone
Valid Entries	Inside, Outside
Inspect	No
Copy Option	No
Console Procedure	Options→InsideDial→Inside or Outside→Enter→Exit
PC Procedure	F7→F9→F1 or F2→F10→F5

Reminder Service Cancel

Use this procedure to set the time of day when all programmed Reminder Service calls are automatically canceled.

To deactivate Reminder Service Cancel, erase the currently programmed time and do not enter a new time.

Summary: Reminder Service Cancel

Programmable by	System manager
Mode	All
Idle Condition	Not required
Planning Form	Form 8a, System Features
Factory Setting	Not applicable
Valid Entries	0000 to 2359
Inspect	No
Copy Option	No

Console Procedure	To deactivate Reminder Service Cancel:
	`Options`→`Reminder Srv`→**Drop**→`Enter`→`Exit`
	To set Reminder Service Cancel time:
	`Options`→`Reminder Srv`→**Drop**→Dial time→`Enter`→`Exit`

PC Procedure	To deactivate Reminder Service Cancel: F7 → F10 → Alt + P → F10 → F5 To set Reminder Service Cancel time: F7 → F10 → Alt + P → Type time → F10 → F5

Redirect Outside Calls to Unassigned Extension Numbers

Use this procedure to specify the extension number to receive redirected calls. Redirected calls include calls made to unassigned numbers by remote access users, by users on DID trunks (Hybrid/PBX only), or by users on dial-in tie trunks. Calls can be redirected to the following locations:

- The QCC queue (Hybrid/PBX only)
- Another extension number
- A calling group

Hybrid/PBX Mode Only
This setting does not affect calls received on DID trunks if you have specified that calls to unassigned DID extensions are to receive a fast busy signal. See "Invalid Destination."

Summary: Redirect Outside Calls to Unassigned Extension Numbers

Programmable by	System manager
Mode	All
Idle Condition	Not required
Planning Form	Form 8a, System Features
Factory Setting	Extension number of primary operator
Valid Entries	QCC queue extension number, other extension number
Inspect	No
Copy Option	No
Console Procedure	To select QCC queue: Options→**More**→Unassigned→QCC Queue→Enter→Exit To select extension or calling group: Options→**More**→Unassigned→Extension or Grp Calling →Enter→Dial ext. no. or group no.→Enter→Exit
PC Procedure	To select QCC queue: F7→PgUp→F1→F1→F1→F10→F5 To select extension or calling group: F7→PgUp→F1→F2 or F3→Type ext. no. or group no. →F10→F5

Host System Dial Codes for Behind Switch Mode

Use this procedure to assign the host system dial codes for the Transfer, Conference, and Drop features.

When multiline telephone users press the **Transfer**, **Conference**, or **Drop** button, a signal is sent to the host service and the communications system features are not accessed. Assigning dial codes to these features ensures that users can take advantage of them through the host system.

NOTE:
This procedure applies to Behind Switch mode only.

Summary: Host System Dial Codes for Behind Switch Mode

Programmable by	System manager
Mode	Behind Switch
Idle Condition	Not required
Planning Form	Form 1, System Planning
Factory Setting	No host dial codes are assigned
Valid Entries	Host system dial code of up to 6 digits
Inspect	No
Copy Option	No
Console Procedure	Options→**More**→BehndSwitch→Select feature→**Drop**→Dial host system dial code→Enter→Exit→Exit
PC Procedure	F7→PgUp→F2→Select feature→Alt + P→Type host system dial code→F10→F5→F5

Recall Timer

Use this procedure to designate the length of the timed flash that is sent when Recall is used to disconnect a call and get a new dial tone without hanging up. Both the interval of the timed flash and how Recall works depend on the type of telephone and system operating mode.

The recall timer should be reset if multiline telephone users experience either of the following problems:

- Nothing happens when the user presses the Recall button on an outside call. This indicates that the interval is too short and should be increased to 650 milliseconds or 1 second.
- In a system operating in Behind Switch mode, the call is disconnected when the user presses the Recall button on an outside call. This indicates that the interval is too long and should be decreased to 350 milliseconds.

Summary: Recall Timer

Programmable by	System manager
Mode	All
Idle Condition	Not required
Planning Form	Form 8a, System Features
Factory Setting	450 ms
Valid Entries	350 ms, 450 ms, 650 ms, 1 second
Inspect	No
Copy Option	No
Console Procedure	`Options`→**More**→`RecallTimer`→Select time→`Enter`→`Exit`
PC Procedure	F7 → PgUp → F3 →Select time→ F10 → F5

Inter-digit Timers

This procedure to program inter-digit timers has not yet been implemented. If situations occur where a caller is attempting to make an outside call and becomes connected to an incoming call, the caller may not be able to put the incoming call on hold or transfer the call. Setting inter-digit timers to shorter times will permit the call to be put on hold or transfered. If you are experiencing these types of problems, call the AT&T Helpline at 1 800 628-2888.

Allowed Lists

Use this procedure to establish Allowed Lists. These lists are telephone numbers that can be dialed from specified telephones, regardless of any calling restrictions that are assigned to the telephones.

A maximum of eight lists (numbered 0 through 7) with a maximum of 10 numbers each (numbered 0 through 9) are allowed. Each allowed number can be no more than six digits (an area code plus an exchange) or six digits with a leading 1, where required.

If you program 0 as the first digit of a list entry, any toll restriction assigned to the extension is removed for calls that can be placed by a toll operator.

Special characters (such as Pause) are not permitted in Allowed List entries.

Summary: Allowed Lists

Programmable by	System manager
Mode	All
Idle Condition	Not required
Planning Form	Form 6g, Call Restriction Assignments and Lists
Factory Setting	Not applicable
Valid Entries	Area code/exchange (1- to 6-digits with leading 1, if necessary)
Inspect	No
Copy Option	No
Console Procedure	`Tables`→`AllowList`→Dial list no. and entry no.→`Enter`→**Drop**→Dial no.→`Enter`→`Exit`
PC Procedure	[F8]→[F1]→Type list no. and entry no.→[F10]→[Alt] + [P]→Type no.→[F10]→[F5]

Assign Allowed Lists to Telephones

Use this procedure to assign individual telephones access to established Allowed Lists. More than one Allowed List can be assigned to a telephone.

Summary: Assign Allowed Lists to Telephones

Mode	All
Idle Condition	Not required
Planning Form	Form 6g, Call Restriction Assignments and Lists
Factory Setting	Not applicable
Valid Entries	0 to 7
Inspect	Yes
Copy Option	Yes
Console Procedure	`Tables`→`AllowTo`→Dial list no.→`Enter`→Dial ext. no.→`Enter`→`Exit`→`Exit`
PC Procedure	[F8]→[F2]→Type list no.→[F10]→Type ext. no.→[F10]→[F5]→[F5]

Disallowed Lists

Use this procedure to establish Disallowed Lists. These lists are telephone numbers that cannot be dialed from specified telephones (including unrestricted telephones).

A maximum of 8 lists (numbered 0 through 7) with 10 entries each (numbered 0 through 9) are allowed. Each number can have a maximum of 11 digits, including wildcards. The Pause character (entered by pressing the **Hold** button) is used to designate a wildcard character, for example, to indicate that calls to a given exchange are restricted in every area code.

Security Alert:

Create a Disallowed List or use the pre-prepared Disallowed List number 7 (Release 3.1 and later systems only) to disallow dialing 0, 11, 10, 1700, 1809, 1900, and 976 or 1(wildcard)976. In Release 3.1 and later systems, Disallowed List number 7 does not include 800 and 1800 and 411 and 1411, but AT&T recommends that you add them. ***Assign all voice mail port extensions to this Disallowed List. AT&T recommends assigning Disallowed List number 7. This is an added layer of security, in case outward restriction is inadvertently removed.*** *(In Release 3.1 and later systems, voice messaging ports are assigned by default to Disallowed List number 7.)*

Summary: Disallowed Lists

Programmable by	System manager
Mode	All
Idle Condition	Not required
Planning Form	Form 6g, Call Restriction Assignments and Lists
Factory Setting	List #7 containing the following: 0, 10, 11, 1809, 1700, 1900, 976, 1ppp976 (p = wildcard), *
Valid Entries	1- to 11-digit number (including wildcards)
Inspect	No
Copy Option	No
Console Procedure	`Tables`→`Disallow`→Dial list no. and entry no.→`Enter`→**Drop**→Dial no.→`Enter`→`Exit`
PC Procedure	[F8]→[F3]→Type list no. and entry no.→[F10]→[Alt] + [P]→Type no.→[F10]→[F5]

Assign Disallowed Lists to Telephones

Use this procedure to assign established Disallowed Lists to individual telephones. Each restricted telephone can be assigned to more than one list.

Summary: Assign Disallowed Lists to Telephones

Programmable by	System manager
Mode	All
Idle Condition	Not required
Planning Form	Form 6g, Call Restriction Assignments and Lists
Factory Setting	Not applicable
Valid Entries	0 to 7
Inspect	Yes
Copy Option	Yes
Console Procedure	`Tables`→`DisallowTo`→Dial list no.→`Enter`→Dial ext. no.→`Enter`→`Exit`→`Exit`
PC Procedure	[F8]→[F4]→Type list no.→[F10]→Type ext. no.→[F10]→[F5]→[F5]

Remote Access Features

This section covers the following Remote Access features:

- Remote Access Trunk Assignment
- Remote Access Automatic Callback
- Remote Access without Barrier Codes
- Remote Access Barrier Codes
- Remote Access with Barrier Codes

Security Alert:

As a customer of a new telephone system, you should be aware that there exists an increasing problem of telephone toll fraud. Telephone toll fraud can occur in many forms, despite the numerous efforts of telephone companies and telephone equipment manufacturers to control it. Some individuals use electronic devices to prevent or falsify records of these calls. Others charge calls to someone else's number by illegally using lost or stolen calling cards, billing innocent parties, clipping on to someone else's line, and breaking into someone else's telephone equipment physically or electronically. In certain instances, unauthorized individuals make connections to the telephone network through the use of remote access features.

The Remote Access feature of your system, if you choose to use it, permits off-premises callers to access the system from a remote telephone by using an 800 number or a 7- or 10-digit telephone number. The system returns an acknowledgment signaling the user to key in his or her barrier code, which is selected and administered by the system manager. After the barrier code is accepted, the system returns dial tone to the user. If you do not program specific restrictions, the user will be able to place any call normally dialed from a telephone associated with the system. Such an off-premises network call is originated at and will be billed from the system location.

The Remote Access feature helps the customer, through proper administration, to minimize the ability of unauthorized persons to gain access to the network. Most commonly, phone numbers and codes are compromised when overheard in a public location, through theft of a wallet or purse containing access information, or through carelessness (writing codes on a piece of paper and improperly discarding it). Additionally, hackers may use a computer to dial an access code and then publish the information to other hackers. Enormous charges can be run up quickly. It is the customer's responsibility to take the appropriate steps to properly implement the features, evaluate and administer the various restriction levels, protect access codes, and distribute access codes only to individuals who have been fully advised of the sensitive nature of the access information.

Common carriers are required by law to collect their tariffed charges. While these charges are fraudulent charges made by persons with criminal intent, applicable tariffs state that the customer of record is responsible for payment of all long-distance or other network charges. AT&T cannot be responsible for such charges and will not make any allowance or give any credit for charges that result from unauthorized access.

To minimize the risk of unauthorized access to your communications system follow these basic rules:

- Use a nonpublished remote access number.
- Assign barrier codes randomly to users on a need-to-have basis, keeping a log of ALL authorized users and assigning one code to one person.
- Use random sequence barrier codes, which are less likely to be broken.
- Deactivate all unassigned codes promptly.
- Ensure that remote access users are aware of their responsibility to keep the telephone number and any barrier codes secure.
- When possible, restrict the off-network capability of off-premises callers using the Call Restrictions and Disallowed List capabilities.
- When possible, block out-of-hours calling.
- Frequently monitor system call detail reports for quicker detection of any unauthorized or abnormal calling patterns.
- Limit remote call forward to persons on a need-to-have basis.
- Always use the longest length password allowed on the system.
- Passwords should consist of a random, non-repetitive, hard-to-guess sequence of digits.

Remote Access Trunk Assignment

Use this procedure to assign or remove the trunks used for remote access. You can also use this procedure to specify whether the Remote Access feature is dedicated (always used for remote access) or shared (used for remote access only when Night Service is activated).

Trunks used for dedicated remote access must not be assigned to ring into a calling group or the QCC queue (Hybrid/PBX mode only).

In Hybrid/PBX mode, if a trunk assigned to ring into the QCC queue is also used for shared remote access, perform the procedure below before you perform the "QCC Operator to Receive Calls" procedure.

NOTE:
A loop start line/trunk must be programmed for Reliable Disconnect if it is to be used for remote access (see "Disconnect Signaling Reliablility").

Summary: Remote Access Trunk Assignment

Programmable by	System manager
Mode	All
Idle Condition	Not required
Planning Form	Form 3a, Incoming Trunks: Remote Access
Factory Setting	Remote Access is not assigned
Valid Entries	Dedicated, Shared, No Remote
Inspect	Yes
Copy Option	No
Console Procedure	`LinesTrunks`→`RemoteAccss`→`LinesTrunks`→Dial line/trunk no.→`Enter`→Specify how trunk is used→`Enter`→`Exit`→`Exit`
PC Procedure	[F4]→[F8]→[F1]→Type line/trunk no.→[F10]→Specify how trunk is used→[F10]→[F5]→[F5]

Procedure: Remote Access Trunk Assignment

	Console Display/Instructions	Additional Information	PC
1	**Select the Lines and Trunks menu.**		
	System Programming: > Make a selection System Extensions SysRenumber Options Operator Tables LinesTrunks AuxEquip Exit NightSrvce		F4
2	**Select Remote Access.**		
	Lines and Trunks: > Make a selection LS/GS/DSL PRI TIE Lines Copy TT/LS Disc RemoteAccss DID Pools Exit Toll Type		F8
3	**Select Lines and Trunks.**		
	Remote Access (DISA): Make a selection LinesTrunks AutoQueuing Non-TIE TIE Lines BarrierCode Exit		F1
4	**Enter the line/trunk for remote access usage (*nnnn*).**		
	Remote Access Usage: Enter line/trunk port Backspace Exit Enter	Dial or type: Trunk number [*nnn*] Logical ID number #[*nnnn*].	
5	**Save your entry.**		
	Select **Enter**.		F10
6	**Specify how the line/trunk is used with remote access.**		
	Line/Trunk *xxxx*: Select one Dedicated Shared No Remote Next Exit Enter	*xxxx* = line/trunk entered in Step 4 Select **Dedicated**, **Shared**, or **No Remote**.	 F1 F2 F3

	Console Display/Instructions	Additional Information	PC
7	**Continue to assign the remote access status to another line/trunk or go to Step 8.**		
	Select **Next**.		F9
		Return to Step 6. The next line/trunk will be displayed on Line 1.	
8	**Save your entry.**		
	Select **Enter**.		F10
9	**Return to the System Programming menu.**		
	Select **Exit** two times.		F5 F5

Remote Access Automatic Callback

Use this procedure either to allow remote access users to use the Automatic Callback feature to request busy lines/trunks or pools or to prevent use of the Automatic Callback feature.

NOTE:
This feature applies to Hybrid/PBX mode only.

Summary: Remote Access Automatic Callback

Programmable by	System manager
Mode	Hybrid/PBX
Idle Condition	Not required
Planning Form	Form 3a, Incoming Trunks: Remote Access
Factory Setting	Disable
Valid Entries	Disable, Enable
Inspect	No
Copy Option	No
Console Procedure	LinesTrunks→RemoteAccss→AutoQueuing→Enable or Disable→Enter→Exit→Exit
PC Procedure	F4 → F8 → F6 → F1 or F2 → F10 → F5 → F5

Procedure: Remote Access Automatic Callback

	Console Display/Instructions	Additional Information	PC
1	**Select the Lines and Trunks menu.**		
	System Programming: > Make a selection System Extensions SysRenumber Options Operator Tables LinesTrunks AuxEquip Exit NightSrvce		F4
2	**Select Remote Access.**		
	Lines and Trunks: > Make a selection LS/GS/DSL PRI TIE Lines Copy TT/LS Disc RemoteAccss DID Pools Exit Toll Type		F8
3	**Specify Automatic Callback (queuing).**		
	Remote Access (DISA): Make a selection LinesTrunks AutoQueuing Non-TIE TIE Lines BarrierCode Exit		F6
4	**Allow or disallow use of automatic callback feature by remote access users.**		
	Remote Access Auto Que: Select one Enable Disable Exit Enter	Select **Enable** or **Disable**.	F1 F2
5	**Save your entry.**		
	Select **Enter**.		F10
6	**Return to the System Programming menu.**		
	Select **Exit** two times.		F5 F5

Remote Access Without Barrier Codes

Use this procedure to change the class of restriction for one of the following:

- All non-tie lines/trunks
- All tie trunks and DID trunks with Remote Access
- DID remote access code

Security Alert:

Your system will be highly susceptible to toll fraud if you activate the Remote Access feature without barrier codes. AT&T does not recommend doing this.

NOTE:
If barrier code requirements have been established for remote access users, use “Remote Access with Barrier Codes” and not this procedure.

The class of restriction assigned may be one of the following:

- **Restriction**. Determines whether remote access users can make local and/or toll calls and includes the following settings:
  - Unrestricted
  - Toll restricted
  - Outward restricted
- **ARS Facility Restriction Level** (Hybrid/PBX only). Allows or disallows use of outgoing trunks by assigning a facility restriction level from 0 through 6. The FRL ranges from 0 (most restrictive) to 6 (least restrictive). The FRL value assigned here is the opposite of the FRL value assigned to the ARS route, where a value of 0 is the least restrictive and a value of 6 is the most restrictive.
- **Allowed Lists Assignment.** Assigns Allowed Lists and is used when remote access users are restricted from making local or toll calls.
- **Disallowed Lists Assignment**. Assigns Disallowed Lists and is used when remote access users are not restricted from making local or toll calls.

A maximum of eight Allowed or Disallowed Lists can be assigned to lines/trunks.

Class of restriction settings are assigned either to all non-tie trunks or to all tie trunks and DID trunks. They cannot be assigned to each trunk on an individual basis.

Summary: Remote Access Without Barrier Codes

Programmable by	System manager
Mode	All
Idle Condition	Not required
Planning Form	Form 3a, Incoming Trunks: Remote Access
Factory Setting	Call restriction: Outward restricted ARS restriction level: 3
Valid Entries	Unrestricted, Toll Restricted, Outward Restricted; 0 to 6
Inspect	No
Copy Option	No

Console Procedure	To change Call Restrictions:
	`LinesTrunks`→`RemoteAccss`→`Non-TIE` or `TIE Lines`→ `Restriction`→Select restriction→`Enter`→`Exit`→`Exit`→ `Exit`→`Exit`
	To change ARS Facility Restriction Level:
	`LinesTrunks`→`RemoteAccss`→`Non-TIE` or `TIE Lines`→`ARS Restrict`→**Drop**→Dial FRL value→`Enter`→`Exit`→`Exit` →`Exit`→`Exit`
	To assign/remove Allowed Lists:
	`LinesTrunks`→`RemoteAccss`→`Non-TIE` or `TIE Lines`→ `Allow List`→Dial list no.→`Enter`→`Exit`→`Exit`→`Exit`→ `Exit`
	To assign/remove Disallowed Lists:
	`LinesTrunks`→`RemoteAccss`→`Non-TIE` or `TIE Lines`→ `DisallowLst`→Dial list no.→`Enter`→`Exit`→`Exit`→`Exit`→ `Exit`

PC Procedure	To change Call Restrictions: F4→F8→F2 or F3→F2→Select restriction→F10→ F5→F5→F5→F5 To change ARS Facility Restriction Level: F4→F8→F2 or F3→F3→Alt + P→Type FRL value →F10→F5→F5→F5→F5 To assign/remove Allowed Lists: F4→F8→F2 or F3→F4→Type list no.→F5→F5→ F5→F5 To assign/remove Disallowed Lists: F4→F8→F2 or F3→F6→Type list no.→F10→F5→ F5→F5→F5

Procedure: Remote Access Without Barrier Codes

	Console Display/Instructions	Additional Information	PC
1	**Select the Lines and Trunks menu.**		
	System Programming: > Make a selection System Extensions SysRenumber Options Operator Tables LinesTrunks AuxEquip Exit NightSrvce		F4
2	**Select Remote Access.**		
	Lines and Trunks: > Make a selection LS/GS/DSL PRI TIE Lines Copy TT/LS Disc RemoteAccss DID Pools Exit Toll Type		F8
3	**Specify whether you are establishing/removing a class of restrictions for non-tie lines/trunks or for tie and DID trunks.**		
	Remote Access (DISA): Make a selection LinesTrunks AutoQueuing Non-TIE TIE Lines BarrierCode Exit	Select Non-TIE or TIE Lines.	F2 F3
4	**Select an option.**	● ◆ ■	
	**** Remote Access: Make a selection BarrierCode DisallowLst Restriction ARS Restrct Allow List Exit	**** = option name selected in Step 3 To change current call restrictions, select Restriction and go to ● Restriction Procedure. To change ARS Facility Restriction level, select ARS Restrct and go to ◆ ARS Restriction Procedure. To change Allowed Lists, select Allow List To change Disallowed Lists select Disallow Lst and go to ■ Allowed or Disallowed Lists Procedure.	F2 F3 F4 F6

● Restriction Procedure

Console Display/Instructions	Additional Information	PC
1 Specify the restriction type.		

`**** Remote Access:`
`Select one`
`Unrestricted`
`Outward restrict`
`Toll Restrict`
 	
`Exit  Enter`
	Select **Unrestricted**,
	Outward Restrict, or
	Toll Restrict.
		F1
		F2
		F3

2 Save your entry.		
Select **Enter**.		F10
3 Return to the System Programming menu.		
Select **Exit** three times.		F5 F5 F5

◆ ARS Restriction Procedure

1 Erase the current ARS facility restriction level (*n*).		

`****  Remote Access:`
`Enter ARS restriction`
`level (0-6)`
n
 	
`Backspace`
`Exit  Enter`
	**** = option name selected in Step 3
	
	Press **Drop**.
		
		Alt + P

2 Enter a new ARS facility restriction level (*n* = 0 to 6).		
	Dial or type [*n*].	
3 Save your entry.		
Select **Enter**.		F10
4 Return to the System Programming menu.		
Select **Exit** three times.		F5 F5 F5

■ Allowed or Disallowed Lists Procedure

1 Enter the list you want to assign (*n* = 0 to 7).		

`*** Remote Access:`
`Enter **** List`
`access (0-7)`
 	
`Delete`
`Backspace`
`Exit  Enter`
	*** = option name selected in Step 3
	**** = option name selected in Step 5
	
	Dial or type [*n*].

	Console Display/Instructions	Additional Information	PC
2	**Assign or remove the list.**		
	Select **Enter** or **Delete**.		F10 F8
3	**Return to the System Programming menu.**		
	Select **Exit** three times.		F5 F5 F5

Remote Access Barrier Codes

Use this procedure to establish or remove barrier code requirements as well as to establish or remove the barrier codes themselves.

Barrier codes are security passwords that restrict users from making unauthorized remote access calls on tie and non-tie lines and trunks. Callers are allowed three attempts per call to enter the correct remote access barrier code. If the caller enters an incorrect barrier code or times out during code entry, the caller hears the retry tone. The caller can erase an entered code by dialing ** (two asterisks). Code erasure is counted as one of the three permitted attempts. After three unsuccessful attempts, the caller hears a reorder tone and the call is disconnected. If this happens, the SMDR will contain sixteen 0's in the Account Code field to flag the three failed attempts.

A maximum of 16 barrier codes are allowed for all lines/trunks. Each of the 16 barrier codes may be programmed with its own class of restriction (COR).

The systemwide barrier code length can range from a minimum of 4 characters to a maximum of 11 characters. The default length is 7. If you enter a length that is less than 4 or greater than 11, the entry is erased and the previous entry displays on the screen. When the barrier code length is changed, all barrier codes are erased and must be reassigned. If the barrier code length is changed and barrier codes are not reassigned, users can dial into remote access trunks and enter a barrier code, but will be denied access into the remote access trunks no matter what code is entered.

Security Alert:

- *Always use the longest length barrier code allowed on the system.*
- *Barrier codes should consist of a random, non-repetitive, hard-to-guess sequence of digits.*

The time and date of the most recent change made to the systemwide barrier code length is shown during the system programming procedure as well as on the Remote Access DISA Information report. The SMDR record for incoming remote access trunks includes the barrier code IDs established in this procedure.

Use numbers 0 through 9 and the asterisk (*) to enter the barrier codes. The codes cannot start with an asterisk and cannot contain two consecutive asterisks. (The use of two consecutive asterisks is reserved for users to erase an incorrect barrier code entry.)

See “Remote Access with Barrier Codes: Class of Restriction” to allow or deny use of system features for each barrier code assigned.

Summary: Remote Access Barrier Codes

Programmable by	System manager
Mode	All
Idle Condition	Not required
Planning Form	Form 3a, Incoming Trunks: Remote Access
Factory Setting	No barrier codes are established
Valid Entries	Not applicable
Inspect	No
Copy Option	No

Console Procedure	To establish or remove code requirements:
	`LinesTrunks`→`RemoteAccss`→`Non-Tie` or `TIE Lines`→`BarrierCode`→Specify whether barrier codes are required →`Enter`→`Exit`→`Exit`→`Exit`
	To change barrier code length:
	`LinesTrunks`→`RemoteAccss`→`BarrierCode`→`Code Info` →`Code Length`→**Drop**→Dial code length→`Enter`→`Yes` →`Exit`→`Exit`→`Exit`
	To change barrier code:
	`LinesTrunks`→`RemoteAccss`→`BarrierCode`→`Code Info` →`Code Entry`→Dial code ID→`Enter`→**Drop**→Dial code →`Enter`→`Exit`→`Exit`→`Exit`

PC Procedure	To establish or remove code requirements: [F4]→[F8]→[F2] or [F3]→[F1]→Specify whether barrier codes are required→[F10]→[F5]→[F5]→[F5] To change barrier code length: [F4]→[F8]→[F4]→[F2]→[F1]→[Alt] + [P]→Type code length →[F10]→[F2]→[F5]→[F5]→[F5] To change barrier code: [F4]→[F8]→[F4]→[F2]→[F2]→Type Code ID→[F10]→ [Alt] + [P]→Dial code length→[F10]→[F5]→[F5]→[F5]

Procedure: Remote Access Barrier Codes

	Console Display/Instructions	Additional Information	PC
1	**Select the Lines and Trunks menu.**		
	System Programming: > Make a selection System Extensions SysRenumber Options Operator Tables LinesTrunks AuxEquip Exit NightSrvce		F4
2	**Select Remote Access.**		
	Lines and Trunks: > Make a selection LS/GS/DSL PRI TIE Lines Copy TT/LS Disc RemoteAccss DID Pools Exit Toll Type		F8
3	**Select an option.**	●	
	Remote Access (DISA): Make a selection LinesTrunks AutoQueuing Non-TIE TIE Lines BarrierCode Exit	Select **Non-TIE** or **TIE Lines** to specify whether barrier codes apply to non-tie or tie trunks and go to ● Establish or Remove Barrier Code Requirements Procedure.	F2 F3
		Select **BarrierCode** to change the barrier code length or edit a barrier code, and continue with Step 4.	F4
4	**Select Code Information.**		
	RemoteAccss BarrierCode: Make a selection SProg/Maint Allow List Code Info DisallowLst Restriction ARS Restrct Exit		F2

	Console Display/Instructions	Additional Information	PC
5	**Select an option.**	◆ ■	
	BarrierCode Info: Make a selection Code Length Code Entry Exit	To change the length of the barrier code, select Code Length and go to ◆ Change Barrier Code Length Procedure. To edit a specific barrier code, select Code Entry and go to ■ ChangeBarrier Code Procedure.	F1 F2

● Establish or Remove Barrier Code Requirements Procedure

1	**Select Barrier Code.**		
	**** Remote Access: Make a selection BarrierCode DisallowLst Restriction ARS Restrct Allow List Exit	**** = option name selected in Step 3	F1
2	**Specify barrier code requirement.**		
	**** Remote Access: Select one Barrier Code Required Barrier Code Not Required Exit Enter	**** = option name selected in Step 3 Select Barrier Code Required or Barrier Code Not Required.	F1 F2
3	**Save your entry.**		
	Select Enter.		F10
4	**Return to the System Programming menu.**		
	Select Exit three times.		F5 F5 F5

◆ Change Barrier Code Length Procedure

When the systemwide barrier code length is changed, all barrier codes are erased and must be reassigned. Users will be denied access to remote access trunks until new barrier codes are assigned.

	Console Display/Instructions	Additional Information	PC
1	**Erase the current code length (*nn*).**		
	Barrier Code Length: Changed: *mm/dd/yy hh:mmAM* Enter code length (4-11) *nn* Backspace Exit Enter	The screen displays the date and time of the most recent change to the barrier code length. Press **Drop**.	Alt + P
2	**Enter the new length of the code (*nn* = 4 to 11).**		
		Dial or type [*nn*].	
3	**Save your entry.**		
	Select Enter.		F10
4	**Respond to the confirmation prompt.**		
	Barrier Code Length: All Barrier Codes will be erased. Do you want to continue? Yes No	If you select No, return to Step 5 of the main procedure. Select Yes to continue.	F1 F2
5	**Save your entry.**		
	Select Enter.		F10
6	**Return to the System Programming menu.**		
	Select Exit three times.		F5 F5 F5

◆ Change Barrier Code Procedure

1	**Enter the barrier code ID number (*nn* = 1 to 16).**		
	RemoteAccss BarrierCode: Enter Barriercode number (1-16) Backspace Exit Enter	Dial or type [*nn*].	
2	**Save your entry.**		
	Select Enter.		F10

	Console Display/Instructions	Additional Information	PC
3	**Erase the current code (*nnnn*).**		
	BarrierCode x*xx* Enter *yy* digits (0-9, *) code *nnnn* Backspace Next Exit Enter	*xx* = barrier code ID number entered in Step 1 *yy* = barrier code length Press **Drop**.	Alt + P
4	**Enter a code of up to 11 digits [*N* = any combination of 0 to 9 and an asterisk (*)].**		
		Dial or type [*N*].	
5	**Continue to assign the code to another barrier code ID number or go to Step 6.**		
	Select Next.		F9
		Return to Step 3. The next barrier code number will be displayed on Line 1.	
6	**Save your entry.**		
	Select Enter.		F10
7	**Return to the System Programming menu.**		
	Select Exit three times.		F5 F5 F5

Remote Access with Barrier Codes

Use this procedure to change the class of restriction for individual remote access barrier codes. The class of restriction assigned to each barrier code allows or denies the use of the following system features:

- **Restriction**. Determines whether remote access users can make local and/or toll calls, and includes the following settings:
  - Unrestricted
  - Toll restricted
  - Outward restricted
- **ARS Facility Restriction Level** (Hybrid/PBX only). Allows or restricts use of outgoing trunks by assigning a facility restriction level (FRL) from 0 through 6. The FRL ranges from 0 (most restrictive) to 6 (least restrictive). The FRL value assigned here is the opposite of the FRL value assigned to the ARS route, where a value of 0 is the least restrictive, and a value of 6 is the most restrictive.
- **Allowed Lists Assignment**. Assigns Allowed Lists and is used when remote access users are restricted from making local or toll calls.
- **Disallowed Lists Assignment**. Assigns Disallowed Lists and is used when remote access users are not restricted from making local or toll calls.

A maximum of eight Allowed or Disallowed Lists can be assigned to each barrier code. Class of restriction settings apply to individual barrier codes.

NOTE:
If barrier code requirements have not been established or have been removed for remote access users, do not use this procedure. See “Remote Access Without Barrier Codes.”

Summary: Remote Access with Barrier Codes

Programmable by	System manager
Mode	All
Idle Condition	Not required
Planning Form	Form 3a, Incoming Trunks: Remote Access
Factory Setting	Call restrictions: Barrier Code: outward restricted All other barrier codes: unrestricted ARS restriction level: 3
Valid Entries	Unrestricted, Toll Restricted, Outward Restricted; 0 to 6
Inspect	No
Copy Option	No
Console Procedure	`LinesTrunks`→`RemoteAccss`→`BarrierCode`→`Restriction`→Dial barrier code no.→`Enter`→Select restriction→`Enter`→`ARS Restrict`→Dial barrier code no.→`Enter`→**Drop**→Dial FRL value→`Enter`→`Allow List` or `Disallow List`→Dial barrier code no.→`Enter`→Dial list no.→`Enter`→`Exit`→`Exit`→`Exit`→`Exit`
PC Procedure	[F4]→[F8]→[F4]→[F3]→Type barrier code no.→[F10]→Select restriction→[F10]→[F4]→Type barrier code no.→[F10]→[Alt] + [P]→Type FRL value→[F10]→[F6] or [F7]→Dial barrier code no.→[F10]→[F5]→[F5]→[F5]→[F5]

Procedure: Remote Access with Barrier Codes

Console Display/Instructions	Additional Information	PC
1 Select the Lines and Trunks menu.		

`System Programming: >`
`Make a selection`
`System Extensions`
`SysRenumber Options`
`Operator Tables`
`LinesTrunks AuxEquip`
`Exit NightSrvce`
		[F4]

Console Display/Instructions	Additional Information	PC
2 Select Remote Access.		

`Lines and Trunks: >`
`Make a selection`
`LS/GS/DSL PRI`
`TIE Lines Copy`
`TT/LS Disc RemoteAccss`
`DID Pools`
`Exit Toll Type`
		F8

3 Select Barrier Code Access.		

`Remote Access (DISA):`
`Make a selection`
`LinesTrunks AutoQueuing`
`Non-TIE`
`TIE Lines`
`BarrierCode`
`Exit`
		F4

4 Select an option.	● ◆ ■	

`RemoteAccss BarrierCode:`
`Make a selection`
`SProg/Maint Allow List`
`Codes DisallowLst`
`Restriction`
`ARS Restrct`
`Exit`
	To change current call restrictions, select **Restriction** and go to
	● Change Current Call Restrictions Procedure.
	
	To change ARS Facility Restriction level, select **ARS Restrict** and go to
	◆ Change ARS Restriction Procedure
	
	To change Allowed/Disallowed lists, select **Allow List** or **Disallow Lst** and go to
	■ Change Allowed/Disallowed Lists Procedure.
		F3
		
		F4
		
		F6
		F7

● Change Current Call Restrictions Procedure

1 Enter the barrier code number (*nn* = 1 to 16).		

`Barrier Code:`
`Enter Barriercode number`
`(1-16)`
 	
`Backspace`
`Exit Enter`
	Dial or type [*nn*].	↵

	Console Display/Instructions	Additional Information	PC
2	**Save your entry.**		
	Select **Enter**.		F10
3	**Specify a restriction.**		
	Barrier Code *xx*: Select one Unrestricted Outward Restrict Toll Restrict Next Exit Enter	*xx* = barrier code number entered in Step 1	
		Select **Unrestricted**,	F1
		Outward Restrict, or	F2
		Toll Restrict.	F3
4	**Continue to assign the restriction to another barrier code number or go to Step 5.**		
	Select **Next**.		F9
		Return to Step 3. The next barrier code number will be displayed on Line 1.	
5	**Save your entry.**		
	Select **Enter**.		F10
6	**Return to the System Programming menu.**		
	Select **Exit** three times.		F5 F5 F5

◆ Change ARS Restriction Procedure

1	**Enter a barrier code number (*nn* = 1 to 16).**		
	Barrier Code: Enter Barriercode number (1-16) Backspace Exit Enter	Dial or type [*nn*].	
2	**Save your entry.**		
	Select **Enter**.		F10
3	**Erase the current ARS FRL (*n*).**		
	Barrier Code *xx*: Enter ARS Restriction level (0-6) *n* Backspace Next Exit Enter	*xx* = barrier code entered in Step 1	
		Press **Drop**.	Alt + P
4	**Enter a new ARS FRL (*n* = 0 to 6).**		
		Dial or type [*n*].	

	Console Display/Instructions	Additional Information	PC
5	**Continue to assign the level to another barrier code number or go to Step 6.**		
	Select **Next**.		F9
		Return to Step 3. The next barrier code number will be displayed on Line 1.	
6	**Save your entry.**		
	Select **Enter**.		F10
7	**Return to the System Programming menu.**		
	Select **Exit** three times.		F5 F5 F5

■ Change Allowed/Disallowed Lists Procedure

1 Enter a barrier code number (*nn* = 1 to 16).

```
Barrier Code:
Enter Barriercode number
(1-16)


Backspace
Exit          Enter
```

Dial or type [*nn*].

2 Save your entry.

Select **Enter**. F10

3 Enter the number of the Allowed List or Disallowed List you want to assign or remove (*n* = 0 to 7).

```
Barrier Code xx:
Enter AllowedList access
(0-7)

              Delete
Backspace     Next
Exit          Enter
```

xx = barrier code entered in Step 1

Dial or type [*n*].

4 Assign or remove the Allowed List or Disallowed List from the barrier code number.

Select **Enter** or F10
Delete. F8

You may continue to assign or remove additional lists from the barrier code number by repeating Steps 3 and 4.

5 Continue to assign or remove lists from the next barrier code number or go to Step 6.

Select **Next**. F9

Return to Step 3. The next barrier code number will be displayed on Line 1.

	Console Display/Instructions	Additional Information	PC
6	**Save your entry.**		
	Select `Enter`.		F10
7	**Return to the System Programming menu.**		
	Select `Exit` three times.		F5 F5 F5

Automatic Route Selection

This section contains programming procedures for the following Automatic Route Selection (ARS) features:

- 1 + 7-Digit Dialing Requirements
- ARS Tables
- Start and Stop Times for Subpatterns
- Pool Routing
- Facility Restriction Level (FRL)
- Digit Absorption
- Other Digits
- N11 Special Numbers Tables
- Dial 0 Table
- Voice and/or Data Routing

NOTE:
ARS applies to Hybrid/PBX mode only.

1 + 7-Digit Dialing Requirements

Use this procedure for calls placed within the same (home) area code as the system. The procedure allows you to specify whether or not the local telephone company requires a 1 to precede the 7-digit number. The two available settings are:

- **Within Area Code.** Requires that a 1 plus a 7-digit number must be dialed; the system checks the 1 + 7-digit tables for routing.
- **Not Within Area Code.** Does not require that a 1 precede the 7-digit number (the system does this automatically).

Summary: 1 + 7-Digit Dialing Requirements

Programmable by	System manager
Mode	Hybrid/PBX
Idle Condition	Not required
Planning Form	Form 3f, Automatic Route Selection Tables
Factory Setting	Not within area code
Valid Entries	Not within area code, Within area code
Inspect	No
Copy Option	No
Console Procedure	Tables→ARS→ARS 1+7Dial→Within Area Code or Not within Area Code→Enter→Exit→Exit
PC Procedure	F8→F6→F1→F1 or F2→F10→F5→F5

Procedure: 1 + 7-Digit Dialing Requirements

	Console Display/Instructions	Additional Information	PC
1	**Select the Tables menu.**		
	System Programming: > Make a selection System Extensions SysRenumber Options Operator Tables LinesTrunks AuxEquip Exit NightSrvce		F8
2	**Select Automatic Route Selection.**		
	Tables: Make a selection AllowList ARS AllowTo Disallow DisallowTo Exit		F6
3	**Select ARS 1+7 Digit Dial.**		
	ARS: > Make a selection ARS 1+7Dial SubA Absorb ARS Input Sub A Digit Sub A Pools Sub B Start Sub A FRL Sub B Stop Exit Sub B Pool		F1

	Console Display/Instructions	Additional Information	PC
4	**Specify whether 1+7-digit dialing is required within the home area code.**		

	`1+7 Digit Dialing:`
	`Select one`
	`Within Area Code`
	`Not within Area Code`
	
	`Exit  Enter`
		Select **Within Area Code** or
		Not within Area Code.
			F1
			F2

5	**Save your entry.**		
	Select **Enter**.		F10
6	**Return to the System Programming menu.**		
	Select **Exit** two times.		F5 F5

ARS Tables

Use this procedure for the following tasks:

- To specify type of table (6-digit, area code, exchange, or 1 + 7-digit number).
- To add or change area codes to be included in each table.
- To add or change exchanges to be included in each table.

A maximum of 16 tables can be established, numbered 1 through 16. Each table can have a maximum of 100 entries, numbered 1 through 100. Tables 17 and 18, the Default Toll and Default Local tables respectively, cannot be changed.

The first entry in a 6-digit table must be the area code. Subsequent entries consist of exchanges within that area code.

Area code tables can contain only area codes.

Exchange and 1 + 7-digit tables can contain only exchanges.

The wildcard character (Pause) cannot be used to enter area codes or exchanges in ARS tables.

Summary: ARS Tables

Programmable by	System manager
Mode	Hybrid/PBX
Idle Condition	Not required
Planning Form	Form 3f, Automatic Route Selection Tables
Factory Setting	Not applicable
Valid Entries	Not applicable
Inspect	Yes
Copy Option	No
Console Procedure	`Tables`→`ARS`→`ARS Input`→Dial table no.→`Enter`→Specify table type→`Enter`→Dial entry no.→`Enter`→**Drop**→Dial no.→`Enter`→`Exit`→`Exit`
PC Procedure	F8→F6→F2→Type table no.→F10→Select table type→F10→Type entry no.→F10→Alt + P→Type no.→F10→F5→F5

Procedure: ARS Tables

	Console Display/Instructions	Additional Information	PC
1	**Select the Tables menu.**		

	`System Programming: >`
	`Make a selection`
	`System  Extensions`
	`SysRenumber  Options`
	`Operator  Tables`
	`LinesTrunks  AuxEquip`
	`Exit  NightSrvce`
			F8

2	**Select Automatic Route Selection.**		

	`Tables:`
	`Make a selection`
	`AllowList  ARS`
	`AllowTo`
	`Disallow`
	`DisallowTo`
	`Exit`
			F6

3	**Select ARS Table Input.**		

	`ARS: >`
	`Make a selection`
	`ARS 1+7Dial  SubA Absorb`
	`ARS Input  Sub A Digit`
	`Sub A Pools  Sub B Start`
	`Sub A FRL  Sub B Stop`
	`Exit  Sub B Pool`
			F2

	Console Display/Instructions	Additional Information	PC
4	**Enter the table number (*nn* = 1 to 16).**		
	ARS Table Type: Enter table number (1-16) Backspace Exit Enter	Dial or type [*nn*].	
5	**Save your entry.**		
	Select **Enter**.		F10
6	**Specify a table type.**		
	ARS Table *xx*: Select one 1-Digit Area Code Exchange 1+7 Exit Enter	*xx* = table number entered in Step 4 Select **1-Digit**, **Area Code**, **Exchange**, or **1+7**.	 F1 F2 F3 F4
7	**Save your entry.**		
	Select **Enter**.		F10
8	**Enter the table entry number (*nnn* = 1 to 100).**		
	Table *xx*: Enter entry number (1-100) Backspace Exit Enter	*xx* = number entered in Step 4 Dial or type [*nnn*].	
9	**Save your entry.**		
	Select **Enter**.		F10
10	**Erase the current entry (*nnn*).**		
	ARS Table *xx*, Entry *xxx*: Enter area code or exchange *nnn* Backspace Next Exit Enter	*xx* = table number entered in Step 4 *xxx* = entry number entered in Step 8 Press **Drop**.	 Alt + P
11	**Enter an area code or exchange of up to 3 digits (0 to 9) to include in the table.**		
		Dial or type [*nnn*].	

	Console Display/Instructions	Additional Information	PC
12	**Continue to enter area code or exchange for another table entry number or go to Step 13.**		
	Select **Next**.	Return to Step 10. The next table will be displayed on Line 1.	F9
13	**Save your entry.**		
	Select **Enter**.		F10
14	**Return to the System Programming menu.**		
	Select **Exit** two times.		F5 F5

Start and Stop Times for Subpatterns

Use this procedure to specify the time of day that calls are routed using Subpattern B routing information.

Subpatterns are used to provide two different routing patterns according to the time of day. This allows you to take advantage of lower rates that may apply to some or all lines, or to change restrictions on some facilities during off hours.

The stop time for Subpattern B is the start time for Subpattern A.

Enter the time in 4-digit, 24-hour notation, and use leading zeros as necessary.

Summary: Start and Stop Times for Subpatterns

Programmable by	System manager
Mode	Hybrid/PBX
Idle Condition	Not required
Planning Form	Form 3f, Automatic Route Selection Tables Form 3g, Automatic Route Selection Default and Special Numbers Tables
Factory Setting	No time is specified, thus all calls are routed according to Subpattern A.
Valid Entries	0000 to 2359
Inspect	No
Copy Option	No

Console Procedure	Tables→ARS→Sub B Start→Dial table no.→Enter→ **Drop**→Dial start time→Enter→Sub B Stop→Dial table no.→Enter→**Drop**→Dial stop time→Enter→Exit→Exit
PC Procedure	F8→F6→F8→Type table no.→F10→Alt + P→ Typestart time→F10→F8→Type table no.→F10→ Alt + P→Type stop time→F10→F5→F5

Procedure: Start and Stop Times for Subpatterns

	Console Display/Instructions	Additional Information	PC
1	**Select the Tables menu.**		
	System Programming: > Make a selection System Extensions SysRenumber Options Operator Tables LinesTrunks AuxEquip Exit NightSrvce		F8
2	**Select Automatic Route Selection.**		
	Tables: Make a selection AllowList ARS AllowTo Disallow DisallowTo Exit		F6
3	**Select Subpattern B Start.**		
	ARS: >> Make a selection ARS 1+7Dial SubA Absorb ARS Input Sub A Digit Sub A Pools Sub B Start Sub A FRL Sub B Stop Exit Sub B Pool		F8
4	**Enter the table number (*nn* = 1 to 18).**		
	Subpattern B Start Time: Enter table number (1-18) Backspace Exit Enter	Dial or type [*nn*].	
5	**Save your entry.**		
	Select **Enter**.		F10

	Console Display/Instructions	Additional Information	PC
6	**Erase the current start time (*xxxx*).**		

	`Subpattern B Start Time:`
	`Enter start time hour`
	`(00-23) and min (00-59)`
	xxxx
	
	`Backspace`
	`Exit  Enter`
		Press **Drop**.	Alt + P

7	**Enter the start time for Subpattern B (*hh* = 00 to 23, *mm* = 00 to 59).**		
		Dial or type [*hhmm*].	
8	**Save your entry.**		
	Select **Enter**.		F10
9	**Select Subpattern B Stop Time.**		

	`ARS:  >`
	`Make a selection`
	`ARS 1+7Dial  SubA Absorb`
	`ARS Input  Sub A Digit`
	`Sub A Pools  Sub B Start`
	`Sub A FRL  Sub B Stop`
	`Exit  Sub B Pool`
		This is also the start time for Subpattern A.	F9

10	**Enter the table number (*nn* = 1 to 18).**		

	`Subpattern B Stop Time:`
	`Enter table number (1-18)`
	
	`Backspace`
	`Exit  Enter`
		Dial or type [*nn*].	

11	**Save your entry.**		
	Select **Enter**.		F10
12	**Erase the current stop time (*xxxx*).**		

	`Subpattern B Stop Time:`
	`Enter stop time hour`
	`(00-23) and min (00-59)`
	xxxx
	
	`Backspace`
	`Exit  Enter`
		Press **Drop**.	Alt + P

13	**Enter the stop time for Subpattern B (*hh* = 00 to 23, *mm* = 00 to 59).**		
		Dial or type [*hhmm*].	
14	**Save your entry.**		
	Select **Enter**.		F10

Console Display/Instructions	Additional Information	PC
15 Return to the System Programming menu.		
Select **Exit** two times.		F5 F5

Pool Routing

Use this procedure to identify the trunk pools on which to route calls to area codes and/or exchanges included in ARS tables.

A maximum of six routes (numbered 1 through 6) can be specified for each subpattern. Pool routing is programmed for Tables 1 through 16. Tables 17 and 18, the Default Toll and Default Local tables respectively, cannot be changed.

Summary: Pool Routing

Programmable by	System manager
Mode	Hybrid/PBX
Idle Condition	Not required
Planning Form	Form 3f, Automatic Route Selection Tables Form 3g, Automatic Route Selection Default and Special Numbers Tables
Factory Setting	Not applicable
Valid Entries	Not applicable
Inspect	No
Copy Option	No
Console Procedure	Tables→ARS→Sub A Pools or Sub B Pool→Dial table no. and pool route no.→Enter→Dial pool dial-out code→ Enter→Exit→Exit
PC Procedure	F8→F6→F3 or F10→Type table no. and pool route no. →F10→Type pool dial-out code →F10→F5→F5

Procedure: Pool Routing

Console Display/Instructions	Additional Information	PC
1 Select the Tables menu.		
System Programming: > Make a selection System Extensions SysRenumber Options Operator Tables LinesTrunks AuxEquip Exit NightSrvce		F8

	Console Display/Instructions	Additional Information	PC
2	**Select Automatic Route Selection.**		

	`Tables:`
	`Make a selection`
	`AllowList  ARS`
	`AllowTo`
	`Disallow`
	`DisallowTo`
	`Exit`
			F6

3	**Select pool routing for Subpattern A or B.**	● ◆	

	`ARS:  >`
	`Make a selection`
	`ARS 1+7Dial  SubA Absorb`
	`ARS Input  Sub A Digit`
	`Sub A Pools  Sub B Start`
	`Sub A FRL  Sub B Stop`
	`Exit  Sub B Pool`
		Select **Sub A Pools** and go to ● Subpattern A Procedure.
		
		Select **Sub B Pool** and go to ◆ Subpattern B Procedure
			F3
			
			F10

● Subpattern A Procedure

1	**Enter the table (*nn* = 1 to 18) and the pool route (*m* = 1 to 6) numbers.**		

	`SubPattern A Pools:`
	`Enter table (1-18) and`
	`route (1-6)`
	
	`Backspace`
	`Exit  Enter`
		Dial or type [*nnm*].	↵

2	**Save your entry.**		
	Select **Enter**.		F10
3	**Enter a pool dial-out code of up to 3 digits on which to route calls.**		

	`ARS Pool Table`*xx* `Route`*x*:
	`Enter pool dialout code`
	
	`Backspace  Next`
	`Exit  Enter`
		xx = table number entered in Step 1
		x = route number entered in Step 1
		
		Dial or type [*nnn*].
			↵

4	**Continue to enter pool dial-out code(s) for another route or go to Step 5.**		
	Select **Next**.	Return to Step 3. The next route will be displayed on Line 1.	F9

	Console Display/Instructions	Additional Information	PC
5	**Save your entry.**		
	Select **Enter**.		F10
6	**Return to the System Programming menu.**		
	Select **Exit** two times.		F5 F5

◆ Subpattern B Procedure

1	**Enter the table (*nn* = 1 to 18) and the pool route (*m* = 1 to 6) numbers.**		

	`ARS Route Pattern:`
	`Enter table (1-18) route`
	`(1-6)`
	
	`Backspace`
	`Exit  Enter`
		Dial or type [*nnm*].	↵

2	**Save your entry.**		
	Select **Enter**.		F10
3	**Enter a pool dial-out code of up to 3 digits on which to route calls.**		

	`ARS Pool (xx,x):`
	`Enter pool dialout code`
	
	`Backspace  Next`
	`Exit  Enter`
		xx = table number entered in Step 1
		x = route number entered in Step 1
		
		Dial or type [*nnn*].
			↵

4	**Continue to enter pool dial-out code(s) for another route or go to Step 5.**		
	Select **Next**.	Return to Step 3. The next route will be displayed on Line 1.	F9
5	**Save your entry.**		
	Select **Enter**.		F10
6	**Return to the System Programming menu.**		
	Select **Exit** two times.		F5 F5

Facility Restriction Level

Use this procedure to assign a Facility Restriction Level (FRL) to each route. The FRL ranges from 0 (least restrictive) to 6 (most restrictive) and is used to restrict user access to the route. The FRL assigned to telephones and remote access users is the opposite of the FRL assigned to routes, where 0 is the most restrictive and 6 is the least restrictive.

NOTE:
Pool routes must be programmed before you assign Facility Restriction Levels.

Facility Restriction Levels are assigned to Tables 1 through 18. Tables 17 and 18, the Default Toll and Default Local tables respectively, cannot be changed.

Summary: Facility Restriction Level

Programmable by	System manager
Mode	Hybrid/PBX
Idle Condition	Not required
Planning Form	Form 3f, Automatic Route Selection Tables Form 3g, Automatic Route Selection Default and Special Numbers Tables
Factory Setting	3 (beginning with Release 3.1, Table 18, the Default Local table has a factory setting of 2)
Valid Entries	0 to 6
Inspect	No
Copy Option	No
Console Procedure	Tables→ARS→Sub A FRL or **More** and Sub B FRL→Dial table no, and pool route no.→Enter→Dial restriction level →Enter→Exit→Exit
PC Procedure	F8 → F6 → F4 or PgUp and F1 →Type table no. and pool route no.→F10 →Type restriction level→F10 → F5 → F5

Procedure: Facility Restriction Level

Console Display/Instructions	Additional Information	PC
1 Select the Tables menu.		
System Programming: > Make a selection System Extensions SysRenumber SysRenumber Operator Tables LinesTrunks AuxEquip Exit NightSrvce		F8

Console Display/Instructions	Additional Information	PC

2 Select Automatic Route Selection.

```
Tables:
Make a selection
AllowList      ARS
AllowTo
Disallow
DisallowTo
Exit
```

F6

Console Display/Instructions	Additional Information	PC

3 Select Facility Restriction Level for Subpattern A or B. ● ◆

```
ARS:                          >
Make a selection
ARS 1+7Dial    SubA Absorb
ARS Input      Sub A Digit
Sub A Pools    Sub B Start
Sub A FRL      Sub B Stop
Exit           Sub B Pool
```

Select **Sub A FRL** and go to ● Subpattern A Procedure. F4

Press **More**, select **Sub B FRL**, and go to ◆ Subpattern B Procedure. PgUp F1

● Subpattern A Procedure

1 Enter the table (*nn* = 1 to 18) and the pool route (*m* = 1 to 6) numbers.

```
Sub A Restriction Level:
Enter table (1-18), route
(1-6)


Backspace
Exit           Enter
```

Dial or type [*nnm*].

2 Save your entry.

Select **Enter**. F10

3 Enter the restriction level (*n* = 0 to 6).

```
ARS Table xx Route x:
Enter restriction level
(0-6)


Backspace      Next
Exit           Enter
```

xx = table number entered in Step 1
x = route number entered in Step 1

Dial or type [*n*].

4 Continue to enter FRL for another pool route or go to Step 5.

Select **Next**. F9

Return to Step 3. The next pool route will be displayed on Line 1.

	Console Display/Instructions	Additional Information	PC
5	**Save your entry.**		
	Select **Enter**.		F10
6	**Return to the System Programming menu.**		
	Select **Exit** two times.		F5 F5

◆ Subpattern B Procedure

	Console Display/Instructions	Additional Information	PC
1	**Enter the table (*nn* = 1 to 18) and the pool route (*m* = 1 to 6) numbers.**		
	Subpattern B Restriction: Enter table (1-18), route (1-6) Backspace Exit Enter	Dial or type [*nnm*].	
2	**Save your entry.**		
	Select **Enter**.		F10
3	**Enter the restriction level (*n* = 0 to 6).**		
	ARS Table *xx* Route *x*: Enter restriction level (0-6) Backspace Next Exit Enter	*xx* = table number entered in Step 1 *x* = route number entered in Step 1 Dial or type [*n*].	
4	**Continue to enter FRL for another pool route or go to Step 5.**		
	Select **Next**.	Return to Step 3. The next route will be displayed on Line 1.	F9
5	**Save your entry.**		
	Select **Enter**.		F10
6	**Return to the System Programming menu.**		
	Select **Exit** two times.		F5 F5

Digit Absorption

Use this procedure to specify how many of the digits dialed (0 through 11) by the caller should be absorbed (not sent to the telephone company's central office) by the system when a call is made on an identified route.

Entries of 1 through 11 indicate that the system should not send the specified number of digits, starting with the first digit dialed by the user after the dial-out code.

Digit absorption is assigned to Tables 1 through 18.

NOTE:
Pool routes must be programmed before you assign digit absorption.

Summary: Digit Absorption

Programmable by	System manager
Mode	Hybrid/PBX
Idle Condition	Not required
Planning Form	Form 3f, Automatic Route Selection Tables
Factory Setting	0
Valid Entries	0 to 11
Inspect	No
Copy Option	No
Console Procedure	Tables→ARS→SubA Absorb or **More** and SubB Absorb→ Dial table no. and pool route no.→Enter→**Drop**→Dial no. of digits to absorb→Enter→Exit→Exit
PC Procedure	F8→F6→F6 or PgUp and F2→Type table no. and pool route no.→F10→Alt + P→Type no. of digits to absorb→ F10→F5→F5

Procedure: Digit Absorption

Console Display/Instructions	Additional Information	PC
1 Select the Tables menu.		
System Programming: > Make a selection System Extensions SysRenumber Options Operator Tables LinesTrunks AuxEquip Exit NightSrvce		F8

	Console Display/Instructions	Additional Information	PC
2	**Select Automatic Route Selection.**		

	`Tables:`
	`Make a selection`
	`AllowList  ARS`
	`AllowTo`
	`Disallow`
	`DisallowTo`
	`Exit`
			F6

3	**Select absorb digits for Subpattern A or B.**	● ◆	

	`ARS:  >`
	`Make a selection`
	`ARS 1+7Dial  SubA Absorb`
	`ARS Input  Sub A Digit`
	`Sub A Pools  Sub B Start`
	`Sub A FRL  Sub B Stop`
	`Exit  Sub B Pool`
		Select **Sub A Absorb** and go to ● Subpattern A Procedure.
		
		Press **More**, select **Sub B Absorb**, and go to ◆ Subpattern B Procedure.
			F4
			
			PgUp
			F1

● Subpattern A Procedure

1	**Enter the table (*nn* = 1 to 18) and the pool route (*m* = 1 to 6) numbers.**		

	`Subpattern A Absorption:`
	`Enter table (1-18), route (1-6)`
	
	`Backspace`
	`Exit  Enter`
		Dial or type [*nnm*].	↵

2	**Save your entry.**		
	Select **Enter**.		F10
3	**Erase the current number of absorbed digits (*nn*).**		

	`ARS Table xx Route x:`
	`Enter table absorption digits (0-11)`
	nn
	
	`Backspace  Next`
	`Exit  Enter`
		xx = table number entered in Step 1
		x = route number entered in Step 1
		
		Press **Drop**.
			Alt + P

4	**Enter the number of digits to be absorbed (*nn* = 1 to 11).**		
		Dial or type [*nn*].	↵

	Console Display/Instructions	Additional Information	PC
5	**Continue to enter absorbed digits for another route number for Subpattern A or go to Step 6.**		
	Select **Next**.		F9
		Return to Step 3. The next route number will be displayed on Line 1.	
6	**Save your entry.**		
	Select **Enter**.		F10
7	**Return to the System Programming menu.**		
	Select **Exit** two times.		F5 F5

◆ Subpattern B Procedure

	Console Display/Instructions	Additional Information	PC
1	**Enter the table (*nn* = 1 to 18) and the pool route (*m* = 1 to 6) numbers.**		
	Sub B Absorption Enter table (1-18), route (1-6) Backspace Exit Enter	Dial or type [*nnm*].	
2	**Save your entry.**		
	Select **Enter**.		F10
3	**Erase the current number of absorbed digits (*nn*).**		
	ARS Table *xx* Route *x*: Enter number of digits to absorb (0-11) *nn* Backspace Next Exit Enter	*xx* = table number entered in Step 1 *x* = route number entered in Step 1 Press **Drop**.	Alt + P
4	**Enter the number of digits to be absorbed (*nn* = 1 to 11).**		
		Dial or type [*nn*].	
5	**Continue to enter absorbed digits for another route number for Subpattern B or go to Step 6.**		
	Select **Next**.		F9
		Return to Step 3. The next route number will be displayed on Line 1.	
6	**Save your entry.**		
	Select **Enter**.		F10
7	**Return to the System Programming menu.**		
	Select **Exit** two times.		F5 F5

Other Digits

Use this procedure to specify other (extra) digits that must be added by the system to the beginning of the number dialed by the caller, when calls are placed on an identified route.

NOTES:

1. Pool routes must be programmed before you assign other digits.
2. A maximum of 20 digits can be added, in any combination of the digits 0 through 9.
3. Special characters such as switchhook flash, Stop, and # cannot be included as extra digits. Pause is allowed in every position but the first.
4. Other digits are assigned to Tables 1 through 18.

Summary: Other Digits

Programmable by	System manager
Mode	Hybrid/PBX
Idle Condition	Not required
Planning Form	Form 3f, Automatic Route Selection Tables
Factory Setting	0
Valid Entries	Up to 20 digits (any combination of 0 to 9)
Inspect	No
Copy Option	No
Console Procedure	Tables→ARS→Sub A Digit or **More** and Sub BDigit→ Dial table no. and pool route no.→Enter→**Drop**→Dial digits to be added→Enter→Exit→Exit
PC Procedure	F8→F6→F7 or PgUp and F3→Type table no. and pool route no.→F10→Alt + P Type digits to be added→F10 →F5→F5

Procedure: Other Digits

	Console Display/Instructions	Additional Information	PC
1	**Select the Tables menu.**		
	System Programming: > Make a selection System Extensions SysRenumber Options Operator Tables LinesTrunks AuxEquip Exit NightSrvce		F8

	Console Display/Instructions	Additional Information	PC
2	**Select Automatic Route Selection.**		

	`Tables:`
	`Make a selection`
	`AllowList  ARS`
	`AllowTo`
	`Disallow`
	`DisallowTo`
	`Exit`
			F6

3	**Select other digits for Subpattern A or B.**		

	`ARS:  >`
	`Make a selection`
	`ARS 1+7Dial  SubA Absorb`
	`ARS Input  Sub A Digit`
	`Sub A Pools  Sub B Start`
	`Sub A FRL  Sub B Stop`
	`Exit  Sub B Pool`
		Select **Sub A Digit**.	F7

		Press **More** and	PgUp
		select **Sub B Digit**.	F3
4	**Enter the table (*nn* = 1 to 18) and the route (*m* = 1 to 6) number.**		

	`Sub x Other Digits:`
	`Enter table (1-18), route (1-6)`
	
	`Backspace`
	`Exit  Enter`
		x = subpattern selected in Step 3	

		Dial or type [*nnm*].	↵
5	**Save your entry.**		
	Select **Enter**.		F10
6	**Erase the current number of other digits (*n*).**		

	`ARS Table xx, Route x:  >`
	`Enter other digits`
	`n`
	
	`Backspace  Next`
	`Exit  Enter`
		xx = table number entered in Step 4
		x = route number entered in Step 4	

		Press **Drop**.	Alt + P
7	**Enter up to 20 other digits (*n* = any combination of 0 to 9).**		
		Dial or type [*n*].	↵
8	**Continue to specifiy other digits for another route in the specified subpattern or go to Step 9.**		
	Select **Next**.		F9
		Return to Step 6. The next route number will be displayed on Line 1.	

	Console Display/Instructions	Additional Information	PC
9	**Save your entry.**		
	Select `Enter`.		F10
10	**Return to the System Programming menu.**		
	Select `Exit` two times.		F5 F5

N11 Special Numbers Tables

Use this procedure to specify Facility Restriction Level (FRL) and/or digits that must be added when emergency numbers in the N11 Special Numbers table are dialed (for example, 411, 811, or 911).

Subpattern B, absorb, and pool routing cannot be programmed for the N11 Special Numbers tables.

Summary: N11 Special Numbers Tables

Programmable by	System manager
Mode	Hybrid/PBX
Idle Condition	Not required
Planning Form	Form 3g, Automatic Route Selection Default and SpecialNumbers Tables
Factory Setting	Not applicable
Valid Entries	Not applicable
Inspect	No
Copy Option	No

Console Procedure	To change Facility Restriction Level:
	`Tables`→`ARS`→**More**→`SpeclNumber`→`ARS FRL`→**Drop**→ Dial FRL value→`Enter`→`Exit`→`Exit`→`Exit`
	To program other digits:
	`Tables`→`ARS`→**More**→`SpeclNumber`→`ARS Digit`→**Drop** →Dial digits→`Enter`→`Exit`→`Exit`→`Exit`

PC Procedure	To change Facility Restriction Level: F8 → F6 → PgUp → F4 → F1 → Alt + P → Type FRL value → F10 → F5 → F5 To program other digits: F8 → F6 → PgUp → F4 → F2 → Alt + P → Type digits → F10 → F5 → F5

Procedure: N11 Special Numbers Tables

	Console Display/Instructions	Additional Information	PC
1	**Select the Tables menu.**		
	System Programming: > Make a selection System Extensions SysRenumber Options Operator Tables LinesTrunks AuxEquip Exit NightSrvce		F8
2	**Select Automatic Route Selection.**		
	Tables: Make a selection AllowList ARS AllowTo Disallow DisallowTo Exit		F6
3	**Go to the second screen of the ARS menu.**		
	ARS: > Make a selection ARS 1+7Dial SubA Absorb ARS Input Sub A Digit Sub A Pools Sub B Start Sub A FRL Sub B Stop Exit Sub B Pool	Press **More**.	PgUp
4	**Select N11 Special Numbers Table.**		
	ARS: Make a selection Sub B FRL Dial 0 SubB Absorb Sub A Data Sub B Digit Sub B Data SpeclNumber Exit		F4
5	**Select an option.**	● ◆	
	ARS Specl Numbers Table: Make a selection ARS FRL ARS Digit	To change the current Facility Restriction Level, select **ARS FRL** and go to ● Change FRL Procedure. To specify other digits to add, select **ARS Digit**, and go to ◆ Other Digits Procedure.	F1 F2

● Change FRL Procedure

	Console Display/Instructions	Additional Information	PC
1	**Erase the current restriction level (*x*).**		

	`Special Numbers Pool:`
	`Enter restriction level`
	`(0-6)`
	x
	
	`Backspace`
	`Exit  Enter`
		Press **Drop**.	Alt + P

2	**Enter an FRL value (*n* = 0 to 6).**		
		Dial or type [*n*].	⮌
3	**Save your entry.**		
	Select **Enter**.		F10
4	**Return to the System Programming menu.**		
	Select **Exit** two times.		F5 F5

◆ Other Digits Procedure

1	**Erase the current other digits (*x*).**		

	`Special Numbers Digits`
	`Enter other digits`
	
	x
	
	`Backspace`
	`Exit  Enter`
		Press **Drop**.	Alt + P

2	**Enter up to 20 other digits (*n* = any combination of 0 to 9).**		
		Dial or type [*n*].	⮌
3	**Save your entry.**		
	Select **Enter**.		F10
4	**Return to the System Programming menu.**		
	Select **Exit** two times.		F5 F5

Dial 0 Table

Use this procedure to specify pool routing, Facility Restriction Level (FRL), and Other Digits for the Dial 0 table.

Only one route can be specified. The Subpattern B route cannot be specified for this table, and digit absorption cannot be specified.

Summary: Dial 0 Table

Programmable by	System manager
Mode	Hybrid/PBX
Idle Condition	Not required
Planning Form	Form 3g, Automatic Route Selection Default and Special Numbers Tables
Factory Setting	3
Valid Entries	0 to 6
Inspect	No
Copy Option	No
Console Procedure	Tables→ARS→**More**→Dial 0→ARS Pool or ARS FRL or ARS Digits→Dial value→Enter→Exit→Exit→Exit
PC Procedure	F8→F6→PgUp→F6→F1 or F2 or F3→Type value→F10→F5→F5→F5

Procedure: Dial 0 Table

	Console Display/Instructions	Additional Information	PC
1	**Select the Tables menu.**		
	System Programming: > Make a selection System Extensions SysRenumber Options Operator Tables LinesTrunks AuxEquip Exit NightSrvce		F8
2	**Select Automatic Route Selection.**		
	Tables: Make a selection AllowList ARS AllowTo Disallow DisallowTo Exit		F6
3	**Go to the second screen of the ARS menu.**		
	ARS: > Make a selection ARS 1+7Dial SubA Absorb ARS Input Sub A Digit Sub A Pools Sub B Start Sub A FRL Sub B Stop Exit Sub B Pool	Press **More**.	PgUp

	Console Display/Instructions	Additional Information	PC
4	**Select Dial 0.**		
	ARS: Make a selection Sub B FRL Dial 0 SubB Absorb Sub A Data Sub Digit Sub B Data SpeclNumber Exit		F6
5	**Specify an option.**	● ◆ ■	
	Operator Assist Calls: Make a selection ARS Pool ARS FRL ARS Digits Exit	To program pool routing, select **ARS Pool** and go to ● ARS Pool Procedure. To change the current FRL Level, select **ARS FRL** and go to ◆ ARS FRL Procedure. To change other digits, select **ARS Digits** and go to ■ ARS Digits Procedure.	F1 F2 F3

● ARS Pool Procedure

1	**Erase the current pool dial-out code (*xxx*).**		
	Dial 0 Pool: Enter pool dialout code *xxx* Backspace Exit Enter	Press **Drop**.	Alt + P
2	**Enter a pool dial-out code of up to 3 digits.**		
		Dial or type [*nnn*].	⇐
3	**Save your entry.**		
	Select **Enter**.		F10
4	**Return to the System Programming menu.**		
	Select **Exit** three times.		F5 F5 F5

◆ ARS FRL Procedure

	Console Display/Instructions	Additional Information	PC
1	**Erase the current restriction level (*x*).**		

	`Dial 0 Restriction:`
	`Enter restriction level`
	`(0-6)`
	`x`
	
	`Backspace`
	`Exit  Enter`
		Press **Drop**.	Alt + P

2	**Enter a restriction level (*n* = 0 to 6).**		
		Dial or type [*n*].	
3	**Save your entry.**		
	Select **Enter**.		F10
4	**Return to the System Programming menu.**		
	Select **Exit** three times.		F5 F5 F5

■ ARS Digits Procedure

1	**Erase the current other digits (*x*).**		

	`Dial 0 Other Digits`
	`Enter other digits`
	`x`
	
	`Backspace`
	`Exit  Enter`
		Press **Drop**.	Alt + P

2	**Enter up to 20 other digits (*n* = any combination of 0 to 9).**		
		Dial or type [*n*].	
3	**Save your entry.**		
	Select **Enter**.		F10
4	**Return to the System Programming menu.**		
	Select **Exit** three times.		F5 F5 F5

Voice and/or Data Routing

Use this procedure to route voice, data, or voice and data. The voice/data specification is used mainly in conjunction with PRI. See “PRI Facilities,” especially its subtopic, “Outgoing Tables.”

Voice/data routes can be associated with Subpattern A or Subpattern B.

Summary: Voice and/or Data Routing

Programmable by	System manager
Mode	Hybrid/PBX
Idle Condition	Not required
Planning Form	Form 3g, Automatic Route Selection Default and Special Numbers Tables
Factory Setting	Voice
Valid Entries	Voice Only, Data Only, Voice/Data
Inspect	No
Copy Option	No
Console Procedure	Tables→ARS→**More**→Sub A Data or Sub B Data→Dial table no. and route no.→Enter→Select capability→Enter →Exit→Exit
PC Procedure	F8→F6→PgUp→F7 or F8→Type table no. and route no.→F10→Select capability→F10→F5→F5

Procedure: Voice and/or Data Routing

	Console Display/Instructions	Additional Information	PC
1	**Select the Tables menu.**		
	System Programming: > Make a selection System Extensions SysRenumber Options Operator Tables LinesTrunks AuxEquip Exit NightSrvce		F8
2	**Select Automatic Route Selection.**		
	Tables: Make a selection AllowList ARS AllowTo Disallow DisallowTo Exit		F6
3	**Go to the second screen of the ARS menu.**		
	ARS: > Make a selection ARS 1+7Dial SubA Absorb ARS Input Sub A Digit Sub A Pools Sub B Start Sub A FRL Sub B Stop Exit Sub B Pool	Press **More**.	PgUp

	Console Display/Instructions	Additional Information	PC
4	**Select Subpattern A or B.**		

	`Tables:`
	`Make a selection`
	`Sub B FRL  Dial 0`
	`SubB Absorb  Sub A Data`
	`Sub Digit  Sub B Data`
	`SpeclNumber`
	`Exit`
		Select **Sub A Data** or
		Sub B Data.
			F7
			F8

5	**Enter the table (*nn* = 1 to 18) and route (*m* = 1 to 6) numbers for Subpattern A or B.**		

	`Subpattern x Voice/Data:`
	`Enter table (1-18), route (1-6)`
	
	`Backspace`
	`Exit  Enter`
		x = option name selected in Step 4
		
		Dial or type [*nnm*].
			↵

6	**Save your entry.**		
	Select **Enter**.		F10
7	**Select the appropriate capability.**		

	`ARS Pool Table*xx* Route*x*:`
	`Select capability`
	`Voice Only`
	`Data Only`
	`Voice/Data`
	`Next`
	`Exit  Enter`
		xx = table number entered in Step 5
		x = route number entered in Step 5
		
		Select **Voice Only**,
		Data Only, or
		Voice/Data.
			F1
			F2
			F3

8	**Continue to specify other entries for another route or go to Step 9.**		
	Select **Next**.	Return to Step 7. The next route number will be displayed on Line 1.	F9
9	**Save your entry.**		
	Select **Enter**.		F10
10	**Return to the System Programming menu.**		
	Select **Exit** two times.		F5 F5

Night Service

This section contains summary information for the following optional Night Service features:

- Night Service Group Assignment
- Night Service with Outward Restriction
- Night Service with Time Set

For detailed information see Chapter 3, “Common Administrative Procedures.”

Night Service Group Assignment

Use this procedure to assign extensions and calling groups to a Night Service group for coverage after hours.

A maximum of eight Night Service groups can be assigned (no more than one for each operator position assigned). Any number of extensions can be assigned to a Night Service group, and an extension can belong to more than one group.

A calling group can also be assigned to a Night Service group. This applies only to Release 2.0 or later.

Summary: Night Service Group Assignment

Programmable by	System manager
Mode	All
Idle Condition	Not required
Planning Form	Form 9a, Night Service: Group Assignment
Factory Setting	Not applicable
Valid Entries	Not applicable
Inspect	No
Copy Option	No

Console Procedure	To assign a calling group to a Night Service group: NightSrvce→GroupAssign→Calling Group→Dial ext. no. of Night Service attendant→Enter→Dial calling group no. →Enter→Exit→Exit
	To assign an extension to a Night Service group: NightSrvce→GroupAssign→Extensions→Dial ext. no. of Night Service attendant→Enter→Dial ext. no. of telephone→Enter→Exit→Exit
PC Procedure	To assign a calling group to a Night Service group: [F10]→[F1]→[F2]→Type ext. no. of Night Service attendant →[F10]→Type calling group no.→[F10]→[F5]→[F5]
	To assign an extension to a Night Service group: [F10]→[F1]→[F1]→Type ext. no. of Night Service attendant →[F10]→Type ext. no. of telephone→[F10]→[F5]→[F5]

Night Service with Outward Restriction

Use this procedure to prevent unauthorized use of telephones after hours. This feature requires the user to enter a password to make a call when Night Service is activated, unless one of the lists below applies. It also requires an operator to enter a password in order to manually activate Night Service.

To remove the password requirement follow the procedure below and delete the current password (press the **Drop** button).

This procedure is also used to establish the following lists:

- **Emergency Allowed List.** A list of telephone numbers that can be dialed without a password.
- **Exclusion List.** A list of extensions that are exempt from password requirements.

NOTES:

1. A maximum of 10 telephone numbers can be included on the Emergency Allowed List, each number with a maximum of 12 digits.
2. Extensions included in the Exclusion List keep normal call restrictions (if any are assigned); however, they are not protected in any other way from unauthorized use after hours.
3. AUDIX Voice Power jacks are automatically included on the Exclusion List.

Summary: Night Service with Outward Restriction

Programmable by	System manager
Mode	All
Idle Condition	Not required
Planning Form	Form 9b, Night Service: Outward Restrictions
Factory Setting	No password
Valid Entries	4 digits (any combination of 0 to 9)
Inspect	Yes (Exclusion List)
Copy Option	No
Console Procedure	NightSrvce→OutRestrict→**Drop**→Dial password→Enter→Emergency→Dial item no.→Enter→**Drop**→Dial telephone no.→Enter→ExcludeList→Dial ext. no. →Enter→Exit→Exit
PC Procedure	[F10]→[F2]→[Alt] + [P]→Type password→[F10]→[F3]→Type item no.→[F10]→[Alt] + [P]→Type telephone no.→[F10]→[F4]→Type ext. no.→[F10]→[F5]→[F5]

Night Service with Time Set

Use this procedure to specify the time of day and the days of the week when Night Service is to be activated and deactivated.

Enter the time of day as 4 digits, using 24-hour notation. Enter the day of the week as a single digit (0 to 6), with 0 being Sunday. If you enter an invalid number, the system truncates the number.

If you change the system time while Night Service is active, Night Service is deactivated automatically and you must manually reactivate it.

Operators can override the timer and turn Night Service on and off manually. This feature can be deactivated when out-of-the-ordinary situations occur (for example, a midweek holiday).

NOTE:
For Release 2.1 and earlier, after setting Start and Stop time for Night Service the current day of the week for Night Service must be set using the following procedure.

NightSrvce→Day of Week→Dial the current day of the week→Enter→Exit

If system programming information is being loaded into memory from a backup diskette, the current day of the week must be reset.

Night Service can be turned off by using the following procedure:

NightSrvce→Day of Week→Dial 9→Enter→Exit

NOTE:
The current day of the week for Night Service must be reset if system programming information is being loaded into memory from a backup.

Summary: Night Service with Time Set

Programmable by	System manager
Mode	All
Idle Condition	Not required
Planning Form	Form 9c, Night Service: Time Set
Factory Setting	Not applicable
Valid Entries	Day: 0 to 6; Time: 0000 to 2359
Inspect	No
Copy Option	No
Console Procedure	To add or change start/stop time: NightSrvce→Start→**Drop**→Dial start day and time→Enter→Stop→**Drop**→Dial stop day and time→Enter→Exit To activate/deactivate: NightSrvce→Time Control→Off or On→Enter→Exit
PC Procedure	To add or change start/stop time: F10→F6→Alt + P→Type start day and time→F10→F7→Alt + P→Type stop day and time→F10→F5 To activate/deactivate: F10→F8→F1 or F2→F10→F5

Labeling

This section contains summaries on adding or changing labels for the following:

- Extension Directory
- Lines or Trunks
- Posted Message
- Group Calling
- System Speed Dial Directory

For detailed information see Chapter 3, “Common Administrative Procedures.”

Extension Directory

Use this procedure to establish alphanumeric system labels for display set telephone users to identify the person calling or leaving a message. This procedure is also used to program the Extension Directory feature for MLX telephones.

A label can have a maximum of seven characters.

Summary: Extension Directory

Programmable by	System manager
Mode	All
Idle Condition	Not required
Planning Form	Form 2a, System Numbering: Extension Jacks
Factory Setting	Not applicable
Valid Entries	Not applicable
Inspect	No
Copy Option	No
Console Procedure	**More**→Labeling→Directory→Extension→Dial ext. no. →Enter→**Drop**→Enter label→Enter→Exit→Exit→ Exit
PC Procedure	PgUp→F1→F1→F2→Type ext. no.→F10→Alt + P→ Type label→F6→F5→F5→F5

Lines or Trunks

Use this procedure to establish alphanumeric system labels for display set telephone users to identify the line or trunk being used.

Summary: Lines or Trunks

Programmable by	System manager
Mode	All
Idle Condition	Not required
Planning Form	Form 2c, System Numbering: Line/Trunk Jacks
Factory Setting	Not applicable
Valid Entries	Not applicable
Inspect	No
Copy Option	No
Console Procedure	**More**→`Labeling`→`LinesTrunks`→Dial line/trunk no.→ `Enter`→**Drop**→Dial label→`Enter`→`Exit`→`Exit`
PC Procedure	[PgUp]→[F1]→[F2]→Type line/trunk no.→[F10]→[Alt] + [P]→ Type label→[F6]→[F5]→[F5]

Posted Message

Use this procedure to add or change existing posted messages. The posted messages allow callers with display telephones to know why the called extension does not answer.

Each posted message can have a maximum of 16 characters. Messages 2 through 20 can be changed through programming. Message 1, Do Not Disturb, cannot be changed.

Summary: Posted Message

Programmable by	System manager, Integrated Administration
Mode	All
Idle Condition	Not required
Planning Form	Form 8a, Label Form: Posted Message
Factory Setting	First 10 messages
Valid Entries	1 to 20
Inspect	No
Copy Option	No

Console Procedure	**More**→Labeling→PostMessage→Dial message no.→ Enter→**Drop**→Enter message→Enter→Exit→Exit
PC Procedure	PgUp→F1→F3→Type message no.→F10→Alt + P→ Type message→F6→F5→F5

Group Calling

Use this procedure to establish alphanumeric system labels for display telephone users to identify calling groups.

A label can have a maximum of seven characters.

Summary: Group Calling

Programmable by	System manager, Integrated Administration
Mode	All
Idle Condition	Not required
Planning Form	Form 6e, Group Calling
Factory Setting	Not applicable
Valid Entries	Not applicable
Inspect	No
Copy Option	No
Console Procedure	**More**→Labeling→Grp Calling→Dial calling group ext. no.→Enter→**Drop**→Enter label→Enter→Exit→Exit
PC Procedure	PgUp→F1→F4→Type calling group ext. no.→F10→Alt + P→Type label→F6→F5→F5

System Speed Dial Directory

Use this procedure to establish System Speed Dial numbers for all system users. You can also use this procedure to enter the alphanumeric labels shown on display telephones (for the System Directory feature of the MLX telephone).

A total of 130 numbers (System Speed Dial plus System Directory) can be entered, with a maximum of 11 characters per label.

Speed dial code assignments are 600 through 729.

Summary: System Speed Dial Directory

Programmable by	System manager, Integrated Administration
Mode	All
Idle Condition	Not required
Planning Form	Form 8b, System Speed Dial
Factory Setting	Not applicable
Valid Entries	600 to 729
Inspect	No
Copy Option	No
Console Procedure	**More**→Labeling→Directory→System→Dial dial code no.→Enter→**Drop**→Enter label Enter→Backspace→Dial telephone no.→Enter→Yes or No→Enter→Exit→Exit →Exit
PC Procedure	PgUp→F1→F1→F1→Type dial code no.→F10→Alt + P→Type label→F6→F2→Type telephone no.→F6→ F1 or F2→F6→F5→F5→F5

Print Reports

Use the procedures in this section to change the language for system reports and to print the system reports.

Report Language

Use this procedure to change the language of the system reports. It applies to Release 1.1 and higher. Unless you change the report language, reports are printed in the language chosen as the system language.

Summary: Report Language

Programmable by	System manager
Mode	All
Idle Condition	Not required
Planning Form	Form 1, System Planning
Factory Setting	English
Valid Entries	English, French, Spanish
Inspect	No
Copy Option	No
Console Procedure	**More**→Language→Printer→English or French or Spanish→Enter→Exit
PC Procedure	PgUp→F6→F4→F1 or F2 or F3→F10→F5

Printing System Reports

The communications system can be used to print a variety of reports. You can print individual reports or use the All option to print the entire set of available reports, including all report sections and options. See Appendix F for samples of the print reports.

Use this procedure to print the reports listed below. With the exception of Trunk Information, the dash lists under the bullets show the sections of each report that automatically print when the report option is selected.

- All
  - Each report
  - All report options
- System Set Up
- System Dial Plan

- Pools
- Telephone Paging Zones
- Direct Group Calling
- Lines/Trunks
- Stations (Extensions)

- Label Information
  - Telephone Personal Directory
  - Message Numbers and Posted Messages
- Trunk Information[1]
  - TIE
  - DID
  - Loop/Ground
  - General
- T1 Information
- PRI Information
- Remote Access
  - General Options
  - Non-TIE Restrictions
  - TIE Restrictions
  - Barrier Code Restrictions
- Operator Information
  - Position
  - General Options
  - DSS Options
  - QCC Operators
  - Operator Information
- Allowed Lists
- Allowed Lists Assigned to Extensions
- Disallowed Lists

---

[1] Trunk option must be specified

- Disallowed Lists Assigned to Extensions
- Automatic Route Selection
- Tables
- Extension Directory
- System Directory
- Group Page
- Extension information
- Group Coverage
- Group Calling
- Night Service
- Call Pickup Groups
- Error Logs
- Authorization Codes
- BRI Information Report
- Switch 56 Data Information Report

NOTES:

1. If you select the `All` option, keep in mind that the reports take several minutes to print. You may want to schedule use of the printer during off-peak hours.
2. If you select a report for which there is no information, the report header still prints.
3. Print reports if you cannot back up your system programming information.
4. Do not print reports if your system must handle more than 100 calls per hour.
5. If you are printing from the console, your printer must be connected to the SMDR port. If you are programming on a PC with SPM, you have the following choices:
    - Print reports on the SMDR printer (if available).
    - Print reports on the PC printer.
    - Save reports (on hard disk or floppy).
    - View reports (browse).

See Chapter 2, “Programming With SPM,” for details.

Summary: Printing System Reports

Programmable by	System manager
Mode	All
Idle Condition	Not required
Planning Form	Not applicable
Factory Setting	Not applicable
Valid Entries	Any saved report
Inspect	No
Copy Option	No
Console Procedure	To print trunk information: **More**→Print→Trunk Info→Select trunk type→Exit To print extension information: **More**→Print→**More**→Ext Info→Dial extension number →Enter→Exit To print all other reports: **More**→Print→Select report→Exit
PC Procedure	To print trunk information: PgUp→F3→F6→Select trunk type→F5 To print extension information: PgUp→F3→PgUp→F10→Type extension number→F10 →F5 To print all other reports: PgUp→F3→Select report→F5 To save report on disk: PgUp→F3→Select report→F10→Select GOTO FLOPPY from screen below simulated console→F10 To view report: Ctrl + F8

Data Features

This section covers the programming procedure for analog multiline telephones connected by a General-Purpose Adapter (GPA) to a data terminal and modem.

Other data programming procedures can be found in earlier sections of this book (see Table 4–5), with the exception of Ringing options. See Chapter 5, “Centralized Telephone Programming,” for information about Ringing options.

Table 4–5. Data Features: Programming Procedures

Procedure	Section/Chapter
Assign Trunks or Pools to Data Stations	Chapter 3, “Telephones”
Copy Trunk Assignments	Chapter 3, “Telephones”
Assign Intercom or System Access Buttons	Chapter 3, “Telephones”
Pool Dial-Out Code (Hybrid/PBX only)	Chapter 3, “Optional Telephone Features”
Call Restrictions	Chapter 3, “Optional Telephone Features”
Copy Call Restrictions	Chapter 3, “Optional Telephone Features”
Forced Account Code Entry	Chapter 3, “Optional Telephone Features”
Ringing Options	Chapter 5, “Centralized Telephone Programming”
Assign Data Hunt Group Members	Chapter 3, “Group Calling Member Assignments” in “Optional Group Features”
Assign Data Hunt Group Trunks or Pools	Chapter 3, “Group Calling Line/Trunk or Pool Assignments” in “Optional Group Features”
Group Type	Chapter 3, “Group Type” in “Optional Group Calling Features” (choice restricted to Automatic Log In)

Analog Multiline Telephones at Data Stations

Use this procedure to dedicate a pair of extension jacks to provide the voice and data to an analog data station.

The extension number associated with the first (odd-numbered) extension jack in the pair is the telephone's extension number. The extension number for the second (even-numbered) extension jack is dedicated to Data.

NOTES:

1. Calls cannot be placed to the extension jack reserved for Data.
2. Voice Announce to Busy must be disabled at data stations.
3. When you select `Enter` after entering the voice extension number in the data entry screen, the system automatically assigns the data extension.
4. Use the Inspect feature to verify extension pairs.

Summary: Analog Multiline Telephones at Data Stations

Programmable by	System manager
Mode	All
Idle Condition	System idle
Planning Form	Form 2a, System Numbering: Extension Jacks Form 4b, Analog Multiline Telephone Form 5a, Direct-Line Console (DLC): Analog Data Form 2a, Analog Data Station
Factory Setting	Not applicable
Valid Entries	Extension numbers of analog sets
Inspect	Yes
Copy Option	Yes
Console Procedure	**More**→`Data`→`Voice/Data`→Dial ext. no.→`Enter`→`Exit`
PC Procedure	PgUp→F2→F1→Type ext. no.→F10→F5

Procedure: Analog Multiline Telephones at Data Stations

	Console Display/Instructions	Additional Information	PC
1	**Go to the second screen of the System Programming menu.**		
	System Programming: > Make a selection System Extensions SysRenumber Options Operator Tables LinesTrunks AuxEquip Exit NightSrvce	Press **More**.	PgUp
2	**Select Data.**		
	System Programming: Make a selection Labeling Language Data Print Cntr-Prg Exit		F2
3	**Select Voice/Data.**		
	Data: Make a selection Voice/Data		F1
4	**Enter the voice (odd-numbered) extension number of the pair (*nnnn*).**		
	Data Voice/Data Enter voice/data pair Delete Backspace Exit Enter	The system automatically assigns the data (even-numbered) extension. Use the Inspect feature (**Inspct** or PgDn)to view the pair. **SP:** “Entering an Extension”	
5	**Assign or remove the voice/data pair.**		
	Select **Enter** or **Delete**.	You may continue to assign or remove additional voice/data pairs by repeating Steps 4 and 5.	F10 F8
6	**Return to the System Programming menu.**		
	Select **Exit**.		F5

2B Data

Use this procedure to program an MLX port for 2B Data capability. Assigning a port for 2B Data allows both B-Channels of a single MLX port to be used for up to 128 Kbps data calls. 2B Data capability is available on in Release 4.0 and later.

Consider the following when programming ports for 2B Data capability:

- The extension number of the port cannot be the first or fifth port on an MLX module. These ports are designated as potential operator ports and cannot be used for 2B Data connections.
- The extension number must correspond to the adjunct extension number of an MLX port. By default these extensions begin with “7.”
- Devices that are not intended for 2B Data should not be connected to a port programmed for 2B Data. These devices probably will not work.

Summary: 2B Data

Programmable by	System manager
Mode	Key, Hybrid/PBX
Idle Condition	Required
Planning Form	Data Form 2b, Digital Data Station
Factory Setting	None
Valid Entries	Adjunct extension number up to four digits
Inspect	Yes
Copy Option	No
Console Procedure	Data→2B Data→Dial adjunct ext. no.→Enter→Exit→Exit
PC Procedure	F2→F2→Type adjunct ext. no.→F10→F5→F5

Procedure: 2B Data

	Console Display/Instructions	Additional Information	PC
1	**Go to the second screen of the system programming menu.**		
	System Programming: > Make a selection System Extensions SysRenumber Options Operator Tables LinesTrunks AuxEquip Exit NightSrvce	Press **More**.	PgUp

2 Select Data.

```
System Programming:      >
Make a selection
Labeling      Language
Data
Print
Cntr-Prg
Exit
```

F2

3 Select 2xB Data.

```
Data:
Please make a selection
Voice/Data
2xB Data


Exit
```

4 Enter the adjunct extension number of an MLX port [*xxxx*].

```
2xB Data/Video:          >
Enter adjunct extension
number of an MLX port
xxxx
              Delete
Backspace
Exit          Enter
```

The adjunct extension number cannot correspond to the 1st or 5th port of an MLX module. Use the inspect feature (**Inspect** or PgDn) to view the 2B Data pairs.

Dial or type [*xxxx*].

5 Assign or remove the 2B data pair.

Select **Enter** or **Delete** — F10 / F8

You may continue to assign or remove additional 2B Data pairs by repeating Steps 4 and 5.

6 Return to the System Programming menu.

Select **Exit** two times. — F5 F5

Integrated Administration

NOTE:
This feature applies only to Release 2.0 or later of the communications system.

Integrated Administration is available in Hybrid/PBX and Key modes only.

Capabilities

The Integrated Administration capability of Integrated Solution III (IS III) simplifies the programming of common information for the communications system (the switch), AUDIX Voice Power and, if it is installed, the AT&T FAX Attendant System™. Since the AUDIX Voice Power and FAX Attendant applications use some of the same information programmed on the switch, Integrated Administration lets the installer or system manager make changes or additions to this information just once, instead of on both sides of the connection. Using Integrated Administration reduces programming time and effort and ensures that the switch and the applications are in agreement.

Common Information

The switch and the applications share the following information:

- System numbering of extensions, trunks, and pools
- System labeling of the user (or other input name) associated with each extension, trunk, and pool
- The coverage Group that sends its calls to the applications
- The calling group set up for each service of the applications
- The Reliable Disconnect setting for loop-start trunk
- The Delay Ring and Coverage Delay Interval settings
- The Transfer Return Time and VMS Transfer Return Interval settings

Set Up

You cannot program the common information until you have completed basic setup programming for the communications system. Use SPM or the system programming console to program the following:

- Mode of operation
- System numbering
- System operator positions
- Phantom extensions
- Lines/Trunks to pools assignment

NOTE:
If you do not want all lines to have the same application services, you must assign lines with the same services to the same pools

Programmable Options

When you complete the system setup, you can use the information in Table 4–6 to program through Integrated Administration.

Table 4–6. Programming through Integrated Administration

Option	Factory Setting	Range
Automated Attendant Calling Group	770	
Call Answer Calling Group	7926	
FAX Response Calling Group	7924	
Information Service Calling Group	7927	
Message Drop Calling Group	7928	
Voice Mail Calling Group	7925	
Coverage Group	30	1 to 30
Reliable Disconnect	yes	
Delay Ring	2 rings	1 to 6 rings
Coverage Delay Ring	3 rings	1 to 9 rings
VMS Transfer Return Interval	6 rings	0 to 9 rings
Transfer Return Time	6 rings	0 to 9 rings

The information programmed through Integrated Administration is shared with the communications system control unit. The information does not have to be programmed again when you program the communications system.

If extension numbering is changed on the switch (using the MLX-20L console or SPM), the switch and the application database will no longer be in agreement. To reduce the chance that such changes will disrupt communication between the switch and the application(s), Integrated Administration includes an automatic reconciliation program that runs every day at 3:00 a.m. The program compares the application database to the switch programming and brings the two into agreement. The program makes changes, as necessary, only to the application database, according to the rules listed in Table 4–7. The reconciliation program does not change the switch programming.

In a Release 2.0 or earlier system with Integrated Solution III Version 1.0 or 1.1, use the System Renumbering feature cautiously. When this feature is used, all messages and greetings for users that have been renumbered are erased from AUDIX Voice Power when the automatic reconciliation program runs at 3:00 a.m.

NOTE:
The reconciliation program is disabled in IS III Version 1.2.

Table 4–7. Database Reconciliation Rules

Extension appears in ...		
Switch	**Application Database**	**Action**
yes	yes	None
yes	no	Extension is added to database. Can be added as AUDIX Voice Power or AUDIX Voice Power/FAX Attendant subscriber through Extension Directory screen.
no	yes (regular extension)	Extension is deleted from database and removed as an AUDIX Voice Power or AUDIX Voice Power/FAX Attendant subscriber.
no	yes (special extension)	Extension is retained as special-purpose extension in database.
yes	yes (special extension)	Extension is converted from special-purpose extension to regular extension in database.

When you finish programming the common information, you can complete any remaining system programming procedures. See the *Feature Reference* for additional information on Integrated Administration.

Complete information on IS III can be found in the *Integrated Solution III System Manager's Guide*, Order No. 555-601-010 and the *AT& T Integrated Solution III Installation and Maintenance Guide*, Order No. 555-601-011.

Memory Card

A PCMCIA (Personal Computer Memory Card International Association) interface slot is present on the processor module. The slot is a standard interface through which information can be added to or obtained from the system using a memory card. The PCMCIA interface slot accepts one memory card at a time.

This section covers the following memory card functions:

- Memory Card Formatting
- Restore

Summary information is included for the following procedures:

- Backup
- Automatic Backup

See Chapter 3, "Common Administrative Procedures," for detailed information on Backup and Automatic Backup.

Card Types

The types of memory cards are described below. The card type is identified by a preprinted, color-coded label.

- **Upgrade Card.** This card is used for MERLIN LEGEND Communication System software upgrades. The upgrade can be performed by the system manager using the memory card and the `Maintenance` option on the SPM Main Menu. See *Maintenance and Troubleshooting* for information about this feature.

  This card is identified by an orange label with black lettering.

- **Translation Card.** The backup and restore procedures previously available to system managers through SPM (using the PC and floppy disks) can now be performed using the memory card and the new `Backup/Restore` option on the System menu. A new automatic backup feature permits you to set the system to perform automatic backups to the memory card on a daily or weekly basis. See "Backup" and "Restore" for more information.

  This card is identified by a white label with black lettering.

- **Forced Installation.** For use by qualified service technicians only, this card is used when the system software has been corrupted and a re-installation must be done at the customer site. The use of the card for forced installation is reserved for emergency situations in which the system software on the processor module has been damaged.

  This card is identified by an orange label with black lettering. In addition, black stripes are present on the card to distinguish it from an upgrade card.

Figure 4–4 shows a sample Translation card.

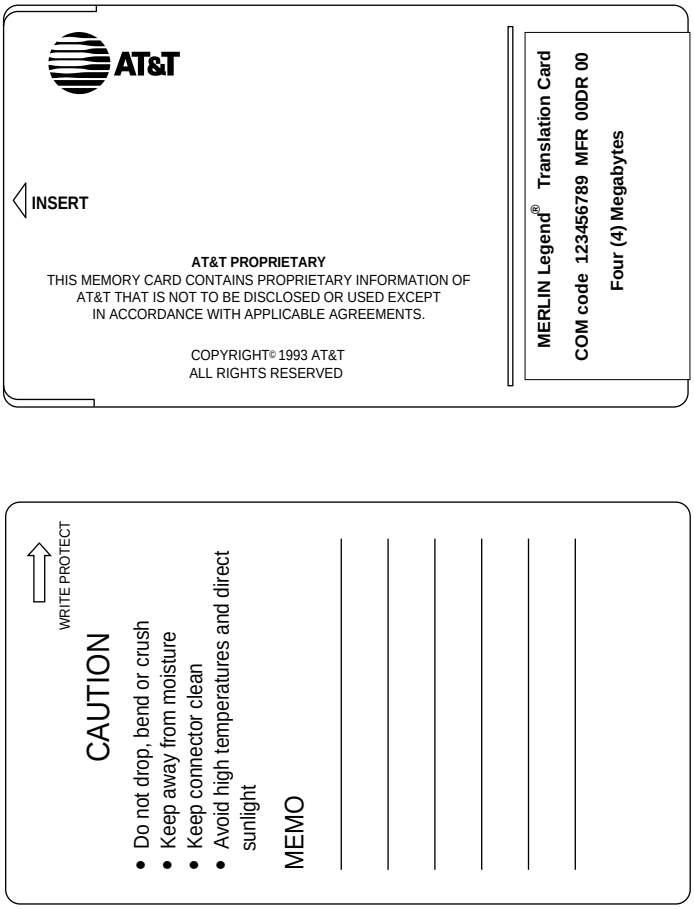

Figure 4–4. PCMCIA Memory Card

Inserting the Card

To insert the card, hold the card with the AT&T logo facing up and the arrow pointing toward the slot. See Figure 4–5 for the proper way to insert the memory card into the slot on the processor module.

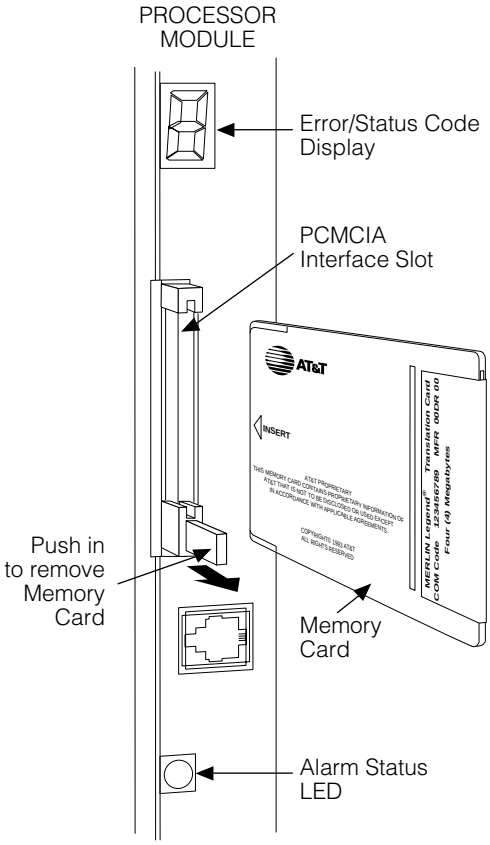

Figure 4–5. Inserting the Memory Card

Memory Card Formatting

The memory card may have to be formatted before you begin any manual or automatic backup procedures. This section details the screens and messages that appear during the format procedure.

CAUTION:
Formatting overwrites previous data on the memory card. Make certain that there is no important information on the card before you begin formatting.

Unformatted Card

```
Memory Card Backup:
Inserted Memory Card is
not the correct type.
Do you want it formatted?
Yes
No
Exit
```

If you begin a backup procedure with an unformatted or incorrectly formatted card, this screen appears.

The inserted memory card is not the correct type. You have the option of formatting the memory card as a translation memory card or repeating the backup procedure with a different memory card.

NOTES:

1. Only 4 MB Series I or Series II PCMCIA memory cards may be formatted, except those already formatted as translation cards.
2. If a memory card cannot be formatted, a message appears on screen. These messages are noted in the procedures as appropriate.
3. A memory card may need to be formatted if it is intended for use as a translation card but is currently blank or contains data other than MERLIN LEGEND Communication System backup files.

Format Warning

```
Format Memory Card:
All data on card will be
DELETED.
Do you want to continue?
Yes
No
Exit
```

This screen appears if you respond to the system prompt to format the memory card.

Select Yes (or press F3) to begin the memory card format. Table 4–8 lists the screen messages that may appear while formatting is in progress.

Table 4–8. Memory Card Formatting Messages

Message	What it Means
Formatting Memory Card	The format is in progress.
Formatting of Memory Card Completed.	The format was successful and has completed.
Memory Card cannot be formatted.	The memory card cannot be formatted. Remove the card and repeat the procedure with another card.
Formatting of Memory Card FAILED.	The format was unsuccessful. Remove the card and repeat the procedure with another card.
Missing Card or Card Not Inserted Correctly	Verify that the card is inserted correctly and repeat the procedure.

If **Home** or **Menu** are pressed during a format procedure, the format is terminated. The data on the memory card may be lost. See Chapter 1, “Programming Basics”, for detail about these keys.

Backup

Use this procedure to make a copy of your customized system data. You should create a backup at least three times during system installation (so that programmed information is not lost), and once after each system upgrade, service technician visit, or major system reconfiguration.

See Chapter 3, “Common Administrative Procedures,” for detailed information and a list of errors that can occur during a backup procedure.

Summary: Backup

Programmable by	System manager
Mode	All
Idle Condition	Not required (No extensions are allowed to be in programming mode except system programming console)
Planning Form	Not applicable
Factory Setting	Not applicable
Valid Entries	Not applicable
Inspect	Yes
Copy Option	No
Console Procedure	Insert memory card→System→Back/Restore→Backup→Select backup file→Dial the new backup filename→Enter→Yes→Exit→Exit→Exit
PC Procedure	Insert memory card→F1→F9→F1→Select backup file→Type the new backup filename→F6→F1→F5→F5→F5

Automatic Backup

Use this procedure to schedule automatic daily or weekly backups of your customized system data.

See Chapter 3, “Common Administrative Procedures”, for detailed information and a list of errors that can occur during a backup procedure.

Summary: Automatic Backup

Programmable by	System manager
Mode	All
Idle Condition	Not required (No extensions are allowed to be in programming mode, including the system programming console)
Planning Form	Form 1, System Planning
Factory Setting	Weekly backup: Sunday at 2:00 am (if daily backup is selected, time is factory set for 2:00 am)
Valid Entries	Daily: hhmm (00 to 23; 00 to 59) Weekly: dhhmm (0 to 6; 00 to 23; 00 to 59)

Inspect	Yes
Copy Option	No
Console Procedure	To program daily backup: Insert memory card→System→Back/Restore→Auto Backup→Daily→**Drop**→Dial time→Enter→Exit→Exit To program weekly backup: Insert memory card→System→Back/Restore→Auto Backup→Weekly→**Drop**→Dial day and time→Enter→Exit→Exit
PC Procedure	To program daily backup: Insert memory card→[F1]→[F9]→[F2]→[F2]→[Alt] + [P]→Type time→[F10]→[F5]→[F5] To program weekly backup: Insert memory card→[F1]→[F9]→[F2]→[F3]→[Alt] + [P]→Type day and time→[F10]→[F5]→[F5]

Restore

Use this procedure to restore system conditions that were backed up onto a translation memory card. The information in a backup file on the translation card is copied to the system.

The restore procedure is necessary under the following conditions:

- System RAM is corrupt.
- A previously stored set of system conditions is preferred over the current set.
- The processor module is replaced.
- After a System Erase (frigid start) has been performed.
- The system software has been reinstalled.

The Inspect feature (**Inspct** or [PgDn]) is available to view the attributes of the backup files on the memory card prior to initiating the restore procedure. The attributes included on the Inspect screen are the filename, the time and day of the file creation/update, the location of the system programming port, and information about the system software release from which the backup was made.

If any type of programming is taking place at another extension when you begin the restore procedure, the restore is canceled and the number of the first busy extension appears on the screen. Repeat the restore procedure when the busy extension becomes idle.

If a line is busy (incoming call or active call) when you begin the restore procedure, the restore is canceled and the number of the first active line appears on the screen. Repeat the restore procedure when the line becomes idle.

Also see “Restore Messages” for information about errors that may occur during the restore procedure.

Summary: Restore

Programmable by	System manager
Mode	All
Idle Condition	System Forced Idle
Planning Form	Not applicable
Factory Setting	Not applicable
Valid Entries	Not applicable
Inspect	Yes
Copy Option	No
Console Procedure	Insert memory card→System→Back/Restore→Restore →Select restore file→Yes
PC Procedure	Insert memory card→F1→F9→F5→Select restore file →F3

Procedure: Restore

Console Display/Instructions	Additional Information	PC
1 Insert the memory card into the PCMCIA interface slot on the processor module.		
2 Select the System menu.		
System Programming: > Make a selection System Extensions SysRenumber Options Operator Tables LinesTrunks AuxEquip Exit NightSrvce		F1
3 Select Back/Restore.		
System: Make a selection Restart MaintenBusy SProg Port Date Mode Time Board Renum Back/Restore Exit		F9

	Console Display/Instructions	Additional Information	PC
4	**Select Restore.**		

	`Memory Card:`
	`Make a selection`
	`Backup  Restore`
	`Auto Backup`
	
	`Exit`
			F5

5	**Inspect the backup files present on the Memory Card.**		

	`MemCard Restore Files:  >`
	
	`aaaaaaaaa MM/DD HH:MM`
	`SProg Port:` *`xxxx X.Y`*
	`bbbbbbbbb MM/DD HH:MM`
	`SProg Port:` *`xxxx X.Y`*
	`Exit`
		Press **More** to view additional files
		
		aaaaaaaaaa, *bbbbbbbbb* = filenames
		xxxx = System Programming Port
		MM/DD HH:MM = date and time
		X.Y = system software release
		
		Press Exit to continue.
			Alt + P
			
			F5

6	**Select the restore file.**		

	`Memory Card Restore:`
	`Select one`
	`BACK1.`*`mmdd`* `AUTO.BACK1`
	`BACK2.`*`mmdd`* `AUTO.BACK2`
	`BACK3.`*`mmdd`*
	
	`Exit  Enter`
		mmdd = month and day of backup
		
		Press the button or function key next to your selection.

7	**Observe the restore file validation screen.**		

	`Memory Card Restore:`
	
	`File is being validated.`		

8	**Respond to the prompt.**		

	`Restore` *`n`*`:`
	`System will be down ...`
	`Do you want to continue?`
	`Yes`
	`No`
	
	`Exit`
		n = filename selected in Step 5
		
		Select **No** to terminate the restore.
		Go back to Step 5.
		
		Select **Yes** to continue the restore.
			
			F3
			
			F2

	Console Display/Instructions	Additional Information	PC
9	**Observe the restore progress screen.**		
	Restore NN Restore in Progress, Please Wait.	*n* = filename selected in Step 5	
10	**Observe the restore file validation screen.**		
	Restore NN Restore Successfully Completed. System is Restarting. Please Wait.	*n* = filename selected in Step 5 The session is finished, and the system restarts. You must enter system programming again if you wish to continue programming.	

Restore Messages

During the restore procedure, additional screens may appear to alert you to problems with the translation memory card, the backup file or the restore procedure. This section contains displays of each screen and information about what to do if the screen appears.

Card Missing or Card Not Inserted Correctly

```
Memory Card Restore:
Verify that Memory Card
has been inserted
correctly.


Exit
```

The memory card is either not inserted or inserted incorrectly. The restore is aborted. You must reinsert the card and repeat the restore procedure. This screen may also appear if the wrong type of memory card is inserted and a restore is requested within one minute of insertion. Verify that the card is a translation memory card.

Card Removed after Confirmation

```
Memory Card Restore:
RESTORE IS CANCELED.
System is DOWN.
```

The memory card was removed from the PCMCIA interface slot while the restore was in progress. The restore is aborted and the system performs a System Erase (frigid start). You must reinsert the memory card and repeat the restore procedure.

Wrong System Programming Port

```
Restore n:
Change Sys Programming
Port to Extension xxxx
before Restoring.


Exit
```

n = filename selected
xxxx = system programming port extension

The system programming port is not set to the same system programming port as that set in the backup file. The restore is aborted. Use the **Inspect** feature to view the port of the file on the card. Change the system programming port to match the port shown on the card (see “System Programming Position Assignment”) and repeat the restore procedure.

Release Mismatch

```
Restore n:
File is Not Compatible
for Release X.Y
Restore Canceled.
Conversion Required.

Exit
```

n = filename selected
X.Y = release number

This screen only appears if you are upgrading from Release 3.0 or higher and the releases are not compatible.

Card Failure Before Confirmation

```
Memory Card Restore:
Restore Failure.
Try a different file
or a new Memory Card.


Exit
```

If the restore fails because the card is damaged, repeat the restore procedure using a different file and/or memory card.

Card Failure after Confirmation

```
Restore n?
Restore Failure
RESTORE IS CANCELED.

System is DOWN.
```

n = filename selected

If the restore fails because the card is damaged, the system performs a System Erase (frigid start). Repeat the restore procedure using a different file and/or memory card.

Wrong Type of Card

```
Memory Card Restore:
Inserted Memory Card is
not the correct type.
Remove and insert MERLIN
LEGEND Backup/Restore
Card.
Exit
```

The inserted card does not match the card option selected from the System menu. Remove the card and repeat the restore procedure with the correct type of card. See “Card Types” for information about the card labels.

Board Mismatch

```
Restore n:
Restore Failure
RESTORE IS CANCELED.
Board mismatch between
control unit and file.

Exit
```

n = filename selected

A mismatch exists between the hardware components present on the current system and the hardware components reflected in the backup file. The restore is aborted. You can do one of the following:

- Repeat the restore procedure with another file.
- Modify the system hardware to match the configuration of the backup file and repeat the restore procedure with the same file.

Strap in Place for Key Mode but Mode is Set to Hybrid

```
Restore n:
Restore Failure
RESTORE IS CANCELED.
Restore File Mode is
Hybrid/PBX. Control Unit
strap in place for KEY.
Exit
```

n = filename selected

CAUTION:
This procedure should be performed only by qualified service personnel.

If the processor module has been set for Permanent Key mode, a restore to Hybrid/PBX mode is not possible. A service associate must be notified in order to modify the processor.

Centralized Telephone Programming

5

This chapter describes centralized telephone programming for the system manager and includes the following information:

- Accessing centralized telephone programming
- Programming the features available with this function
- Programming a single telephone
- Copying programmed features from one extension to another extension (Release 2.0 and higher)

See the *Feature Reference* or the appropriate user or operator guide for details about each feature.

NOTE:
Only the system manager should perform the programming procedures described in this chapter.

Introduction

Centralized telephone programming allows the system manager to program any feature that can be programmed by individual telephone users, or by the system operator, onto another telephone in the system. Any feature that can be programmed at an individual telephone can be programmed using centralized telephone programming.

The following features can be programmed only by using centralized programming:

- Barge-In
- Headset Hang Up
- Intercom buttons: all types (Key and Behind Switch mode only)
- System Access buttons: all types (Hybrid/PBX only)

To perform centralized telephone programming, you can use the system programming console (see Chapter 1, “Programming Basics”) or a PC with SPM software (see Chapter 2, “Programming with SPM”).

In Release 2.0 and higher, if you are programming several telephones of the same type (that is, all analog or all MLX), program one extension and then use the programmed extension as a template for programming additional extensions. See “Copy Extension” and also refer to the planning forms.

NOTE:
Some programming can be performed only when the entire system or some part of it (such as a trunk or an extension) is idle. See “Idle States” in Chapter 1.

Access to Centralized Telephone Programming

Access the Centralized Programming menu from the System Programming menu. Centralized programming is performed by selecting features from the display or by using programming codes.

Follow the procedure below to access the Centralized Programming menu.

	Console Display/Instructions	Additional Information	PC
1	**Go to the second screen of the System Programming menu.**		
	System Programming: > Make a Selection System Extensions SysRenumber Options Operator Tables LinesTrunks AuxEquip Exit NightSrvce	Press **More**.	PgUp

2 Select Centralized Programming.

```
System Programming
Make a selection
Labeling
Data
Print
Cntr-Prg
Exit
```

F4

3 Select a programming option.

```
Centralized Programming:
Make a selection
Program Ext
Copy Ext

Exit          Enter
```

Select `Program Ext` or `Copy Ext`. F1 F2

4 Go to the appropriate section.

The following sections explain the use of menu selections for programming a single extension (Program Extension), and for using one extension as a template for programming several extensions of the same type (Copy Extension).

NOTE:
It is recommended that you use the programming codes for centralized programming; however, you may also use the `List Features` option that is available on the programming screen. See “Using the List Feature Menu” for details about this option.

Program Extension

Review the items below before you begin to program extensions.

- Use Table 5–1 to locate the code for the feature that you want to program.
- If you enter a feature code incorrectly or enter a feature code that is not appropriate for the button, a beep sounds or the message `Programming Error` appears and the green LED next to the button flashes. If this happens, press the button again and repeat the procedure.

- If you make a mistake and program the wrong feature on a button, follow the steps below:
  1. Press the button.
  2. Select `Delete` (press F2 on the PC).
  3. Press the button again.
- If you press a line button that is not active, the screen shown here appears. Press **Home** to return to the Home screen.

```
Blank
Press HOME to Exit
                    Page 1
                    Page 2


Sys Program   ListFeature
```

- You can use the Extension Information (`Ext Info`) report option on the Print menu to print all of the programmed features for a specific extension.

At the Centralized Programming menu, follow the procedure below to program features onto a single telephone.

	Console Display/Instructions	Additional Information	PC
1	**Select Program Extension.**		

	`Centralized Programming:`
	`Make a selection`
	`Program Ext`
	`Copy Ext`
	
	`Exit  Enter`
			F1

2	**Specify the extension you want to program.**		

	`Centralized Programming:`
	`Enter extension`
	
	`Backspace`
	`Exit  Enter`
		SP: “Entering an Extension”	

3	**Save your entry.**		
	Select `Enter`.		F10

4 Select Start.

```
Extension Program     xxxx
Press HOME to Exit

Sys Program          Start
```

xxxx = extension entered in Step 2

F10

5 Select the line button to which you want to assign the feature.

```
Select Button:
Extension Program     xxxx
                   Page 1
                   Page 2

Sys Program
```

xxxx = extension entered in Step 2

Press the line button or function key that corresponds to your selection.

F7

If you are programming a telephone with more than 20 line buttons, use `Page 2` to select line button 21 and above. See Appendix E for button diagrams of all telephones.

6 Program the feature(s).

```
Line xxx - *
Press HOME to Exit
                   Page 1
                   Page 2

Sys Program   ListFeature
```

xxx = line selected in Step 5
* = current feature programmed

Use Table 5–1 to dial or type the programming code: *[*nnn*].
OR
Select `ListFeature` and see "Using the List Feature Menu."

F10

When the line button is programmed, the system automatically returns to the screen in Step 5.

7 Repeat Steps 5 and 6 for each line button you want to program for the extension, or press Home to return to the Centralized Programming menu.

Programming Codes

Table 5–1 provides a quick reference to the programming codes for the system features.

Table 5–1. Telephone Programming Codes

Feature	Code
Account Code Entry	***82**
Alarm	***759**
Authorization Code	***80**
Auto Answer All	***754**
Auto Answer	***753**
Auto Dial	
Inside (ext., group, zone)	***22** + ext. no. + Enter
Outside	***21** + tel. no. + Enter
Automatic Line Selection	
Enter	***14**
Exit	****14**
Barge-In†§	***58**
Callback	
Automatic	
On	***12**
Off	****12**
Selective	***55**
Call Waiting	
On	***11**
Off	****11**
Camp-On	***57**
Conference	***722**
Coverage	
Receiver Buttons	
Primary	***40** + ext. no. + Enter
Secondary	***41** + ext. no. + Enter
Group	***42** + group no. + Enter
Sender Buttons	
Cover in/outside calls	***48**
Cover outside calls only	****48**
Coverage Off	***49**
VMS Off	***46**
Data Status	***83** + ext. no. + Enter
Direct Voice Mail	***56**
Do Not Disturb	***47**
Drop	***773**

Feature	Code
Extension Status	
Direct-Line Console§	
Status Off	***760**
Status 1	***761**
Status 2	***762**
Telephones	
Status 1	***45**
Status 2	***44**
Feature Button	***20**
Forward	***33**
Group Calling	
In-queue alarm button	***22** + group no. + Enter
Calling group supervisor	
Available (ES2)	***762**
Unavailable	***760**
Calling Group Members	
Sign-in (available)	***44**
After work call state	***45**
Group Page	***22** + group no. + Enter
Headset*	
Auto Answer	***780**
Hang Up†	***781**
Mute	***783**
Status	***782**
Last Number Dial	***84**
Messaging	
Leave Message	***25**
Message LED Off	***54**
Posted Message	***751**
Send/Remove Message§	***38**
Receiving Messages	
Delete Message +	***26**
Next Message+	***28**
Return Call+	***27**
Scroll Message+	***29**
Night Service§	***39**

Continued on next page

Table 5–1, *Continued*

Feature	Code
Notify	
Send	***757** + ext. no. + Enter
Receive	***758** + ext. no. + Enter
Park	*****86
Park Zone Auto Dial§	***22** + Park Zone
Personal Speed Dial	**#** + (01–24) + ***21** + tel. no.
Personalized Ring	***32** + ring. no. (1–8)
Pickup	
General use	***9**
Specific ext.	***9** + ext. no. + Enter
Specific line	***9** + line no. + Enter
Group	***88**
Position Busy§	***750**
Privacy	***31**
Recall	***775**
Reminder Service	
Set	***81**
Cancel	****81**
Missed	***752**
Ringing Idle Line Preference	
On	***343**
Off	***344**
Ringing Options	
Ring Timing	
Individual Lines	
Immediate Ring	***37**
Delay Ring	***36**
No Ring	***35**

Feature	Code
All Lines	
Immediate Ring	***347**
Delay Ring	***346**
No Ring	***345**
Abbreviated Ring	
On	***341**
Off	***342**
Send Ring (Shared SA)	
On	***15**
Off	****15**
Saved Number Dial	***85**
Send/Remove Message§	***38**
Signaling	***23** + ext. no. + Enter
System Access	
Intercom/Buttons	
Assign Buttons †	
Ring	***16**
Originate Only	***18**
Shared System Access	***17** + primary ext. no. + Enter
Change Type of Button	
Ring	****19**
Voice	***19**
System Speed Dial	***24** + code (600-729) + Enter
Transfer	***744**
Voice Announce	
On	***10**
Off	****10**

* MLX telephones only.

† Centralized telephone programming only.

\+ Analog display telephone only. MLX display telephones use display instead of programmed buttons.

§ System operator only.

Using the List Feature Menu

You can use the List Feature menu to select a feature, instead of using a programming code. When you select `ListFeature` (or press F10), the first screen of features appears as shown below.

```
Select a Feature:      >
Extension Program   xxxx
Find Feature  Barge In
AccountCode   Call Waiting
Auth Code     Camp On
Auto Dial     Cback Auto
AutoLineSel   Cback Sel
```

xxxx = previously entered extension

F1

There are four feature option screens. Press **More** to move through the screens. Press the button or function key that corresponds to your selection.

You can also use the `FindFeature` option to display alphabetized lists of features that begin with the letter(s) you select. The Find Feature screen is shown below.

```
Choose Starting Letter
Press HOME to Exit
ABC                PQRS
DEF                 TUV
GHI                WXYZ
JKL
MNO
```

Press the button or function key that corresponds to the first letter of the feature you want. The screen displays all of the features that begin with the selected letters. If the list of features for the letters you select does not fill a complete screen, the screen display continues with the next alphabetic feature. Press **Home** to return to the Home screen.

Copy Extension

The system manager uses the copy extension feature to copy an extension's programmed buttons (with some exceptions) to one or more extensions. The features are individually programmed on an extension, creating a template that can then be copied to other extensions in the system.

Only extensions of the same type can be copied to one another (that is, analog to analog, and MLX to MLX) since the two extension types have different button layouts. For a system that has both analog and MLX telephone types, you will need two templates: one for analog and one for MLX.

An MFM can be copied to or from another MFM. A DLC can only be copied to another DLC. Single-line telephones and QCCs *cannot* be copied to or from.

Features That Can Be Copied

Table 5–2 lists the features that can be copied to another extension. Features that can be copied for DLC operator extensions are listed in Table 5–3.

Table 5–2. Features That Can Be Copied: All Telephones

Feature	Analog and MLX Telephones	Analog Telephones Only	MLX Telephones Only
Account Code Entry	X		
Authorization Code*	X		
Auto Answer All		X	
Auto Answer Intercom		X	
Auto Dial Inside	X		
Auto Dial Outside*	X		
Barge-In	X		
Callback-Selective	X		
Camp-On	X		
Conference**	X		
Coverage Off	X		
Coverage VMS Off	X		
Data Status	X		
Direct Voice Mail	X		
Do Not Disturb	X		
Drop**	X		
Extension Status 2 (ES2) (Non-operator)	X		
Extension Status 1 (ES1) (Non-operator)	X		
Feature Button		X	
Forward	X		
Group Calling	X		
Group Page	X		
Headset Auto Answer			X
Headset Hang Up			X

Continued on next page

Table 5–2, ***Continued***

Feature	Analog and MLX Telephones	Analog Telephones Only	MLX Telephones Only
Headset Status			X
Headset/Handset Mute			X
Last Number Dial*	X		
Delete Message		X	
Leave Message	X		
Message Light Off	X		
Next Message		X	
Posted Message	X		
Return Call		X	
Scroll		X	
Park	X		
Pickup: Group	X		
Pickup: General	X		
Pickup: Extension	X		
Pickup: Line	X		
Privacy	X		
Recall	X		
Reminder Service: Set	X		
Reminder Service: Cancel	X		
Saved Number Dial*	X		
Signaling	X		
SA/ICOM Ring†	X		
SA/ICOM Voice†	X		
SA/ICOM Originate Only†	X		
System Speed Dial	X		
Transfer**	X		

* Number is **not** copied.

** Behind Switch mode only.

† Ringing options (No Ring, Delay Ring, and Immediate Ring) are copied with the button.

Table 5–3 shows the operator features than can be copied for operator consoles. QCC features cannot be copied.

Table 5–3. Features That Can Be Copied: Direct-Line Consoles Only

Feature	Analog Direct-Line Console (DLC)	MLX Direct-Line Console (DLC)
Alarm	X	X
Extension Status Off	X	X
Extension Status 1	X	X
Extension Status 2	X	X
Missed Reminder	X	X
Night Service	X	X
Operator Park	X	X
Send/Remove Message	X	X

Use the procedure below to copy programming from one extension to another.

	Console Display/Instructions	Additional Information	PC
1	**Select Copy Extension.**		
	Centralized Programming: Make a selection Program Ext Copy Ext Exit Enter		F2
2	**Specify the number of the extension from which you want to copy programming features.**		
	Extension Program Copy: Enter extension to copy from Backspace Exit Enter	**SP:** “Entering an Extension”	
3	**Save your entry.**		
	Select **Enter**.		F10

4 Specify the number of the extension to which you want to copy programming features.

```
Copy extension xxxx to:
Enter extension



Backspace
Exit          Enter
```

xxxx = extension entered in Step 2

SP: "Entering an Extension"

5 Continue to copy line assignments from the copy extension shown to another extension or go to Step 7.

Select **Enter** or F10
Select **Next**. F9

Use **Enter** to continue to copy line assignments from the extension currently displayed on Line 1 to additional extensions.

Use **Next** if the extension numbers to be copied to are sequential. Select **Enter** (F10) after completing programming.

Go to Step 4 to continue programming. The extension to be copied from will be displayed on Line 1.

6 Return to Centralized Programming menu.

Select **Exit**. F5

Feature Quick Reference

The following feature descriptions provide a quick reference for using centralized telephone programming.

Account Code Entry

Assign a button for account code entry.

Summary: Account Code Entry

Telephones	All (except QCC)
Mode	All (except single-line telephone in Behind Switch mode)
Programmable by	User and system manager
Programming Code	*82
Display Label	AccountCode

Alarm

Assign a button to alert the operator to system problems.

Summary: Alarm

Telephones	DLC operator only
Mode	All
Programmable by	DLC operator and system manager
Programming Code	*759
Display Label	Alarm

Authorization Code

Assign a button for authorization code entry.

Summary: Authorization Code

Telephones	All (except QCC)
Mode	All (except single-line telephone in Behind Switch mode)
Programmable by	User and system manager
Programming Code	*80
Display Label	Auth Code

Auto Answer All

Assign a button to direct calls to an answering device when the user is not available.

Summary: Auto Answer All

Telephones	Analog multiline only
Mode	All
Programmable by	User and system manager
Programming Code	*754
Display Label	AutoAns All

Auto Answer Intercom

Assign a button to answer both inside and outside calls without lifting the handset.

Summary: Auto Answer Intercom

Telephones	Analog multiline only
Mode	All
Programmable by	User and system manager
Programming Code	*753
Display Label	AutoAnsIcom

Auto Dial

Assign buttons for one-touch dialing of frequently called inside or outside numbers.

Summary: Auto Dial Inside and Outside

Telephones	Analog multiline, all MLX telephones (except QCC)
Mode	All
Programmable by	User and system manager
Programming Code	Inside: *22 + ext. no. + Enter
	Outside: *21 + telephone no. + Enter
Display Label	Auto Dial Inside/Outside

Automatic Line Selection

Select the order in which the system makes outside lines available to the user.

NOTE:
Your current Automatic Line Selection table is deleted immediately after you select this feature by either selecting AutoLineSel from the display or pressing *14. There is no way to cancel the operation. You must program new selections and then press **14 to end the operation.

Summary: Automatic Line Selection

Telephones	Analog multiline and all MLX telephones
Mode	All
Programmable by	User and system manager
Programming Code	Enter: *14
	Exit: **14
Display Label	AutoLineSel

Barge-In

Assign a button to allow an operator to interrupt a user's call in an emergency.

Summary: Barge-In

Telephones	All except single-line telephone or QCC
Mode	All
Programmable by	System manager only
Programming Code	*58
Display Label	Barge In

Callback

With Automatic Callback turned on, the system retries calls to busy extensions or busy trunk pools. Assign a Selective Callback button to allow the system to retry calls to busy extensions or busy trunk pools on a call-by-call basis.

NOTE:
To use the Callback feature on loop-start lines/trunks, the loop start line/trunk must be programmed for reliable disconnect. See "Disconnect Signal Reliability," in Chapter 4, "Programming Procedures."

Summary: Automatic Callback

Telephones	All
Mode	All
Programmable by	User and system manager
Programming Code	On: *12
	Off: **12
Display Label	Cback Auto On/Off

Summary: Selective Callback

Telephones	All
Mode	All
Programmable by	User and system manager
Programming Code	*55
Display Label	Cback Sel

Call Waiting

With Call Waiting turned on, a user on a call will know that another call is waiting. User hears one beep for a waiting inside call, two for an outside call.

Summary: Call Waiting

Telephones	All
Mode	All
Programmable by	User and system manager
Programming Code	On: *11
	Off: **11
Display Label	CallWaiting On/Off

Camp-On

Assign a button to allow a user to complete a transfer to a busy extension.

Summary: Camp-On

Telephones	Analog multiline and MLX telephones (except QCC)
Mode	All
Programmable by	User and system manager
Programming Code	*57
Display Label	Camp On

Conference

Assign a button to access the host system conference feature.

Summary: Conference

Telephones	Analog multiline and MLX telephones (except QCC)
Mode	Behind Switch
Programmable by	User and system manager
Programming Code	*772
Display Label	Conference

Coverage

Assign a button to establish Coverage; senders' calls are covered by receivers.

Summary: Receiver Buttons–Primary, Secondary, Group

This procedure assigns primary, secondary, or group coverage receivers.

Telephones	All (except QCC)
Mode	All
Programmable by	User and system manager
Programming Code	Primary: *40 + ext. no. + Enter Secondary: *41 + ext. no. + Enter Group: *42 + group no. + Enter
Display Label	Coverage Primary/Secondary/Group

Summary: Coverage Inside Off/On

This procedure allows or prevents Coverage of inside calls.

Telephones	Analog multiline and MLX telephones (except QCC)
Mode	All
Programmable by	User and system manager
Programming Code	In/Outside Calls: *48 Outside Calls Only: **48
Display Label	CoverInside, On/Off

Summary: Sender Buttons, Coverage Off

This procedure turns off all Coverage.

Telephones	Analog multiline and MLX telephones (except QCC)
Mode	All
Programmable by	User and system manager
Programming Code	*49
Display Label	Coverage Off

Summary: Coverage VMS Off

This procedure prevents outside calls from being sent to voice mail.

Telephones	Analog multiline and MLX telephones (except QCC)
Mode	All
Programmable by	User and system manager
Programming code	*46
Display Label	Coverage VMS Off

Data Status

Assign a button to indicate when a data call is in progress.

Summary: Data Status

Telephones	All (except QCC)
Mode	All
Programmable by	User and system manager
Programming Code	*83 + ext. no. + Enter
Display Label	Data Status

Direct Voice Mail

This feature allows one user to call another user's voice mail without ringing that user's telephone.

Summary: Direct Voice Mail

Telephones	All
Mode	All
Programmable by	User and system manager
Programming Code	*56
Display Label	Direct VoiceMail

Do Not Disturb

Assign a button to prevent calls from ringing at the telephone.

Summary: Do Not Disturb

Telephones	Analog multiline and MLX telephones (except QCC)
Mode	All
Programmable by	User and system manager
Programming Code	*47
Display Label	DoNotDisturb

Drop

Assign a button to access the host system Drop feature.

Summary: Drop

Telephones	Analog multiline and MLX telephones (except QCC)
Mode	Behind Switch
Programmable by	User and system manager
Programming Code	*773
Display Label	Drop

Extension Status

Assign a button to allow system operators or supervisors to monitor the status of extensions and restrict use of telephones (hotel configuration) or to change group members' availability to take calls (Group Calling/CMS configuration).

Summary: DLC Extension Status

Telephones	DLCs only
Mode	All
Programmable by	System manager
Programming Code	Off: *760 ES1: *761 ES2: *762
Display Label	OperatorES, ESOff/ES1/ES2

Summary: Telephone Extension Status 1 and 2

Telephones	Single-line, analog multiline, MLX telephones
Mode	All
Programmable by	User and system manager
Programming Code	ES1: *45 ES2: *44
Display Label	ES Status, ES1/ES2

Feature Button

Use in conjunction with features that require dial codes.

Summary: Feature Button

Telephones	Analog multiline
Mode	All
Programmable by	User and system manager
Programming Code	*20
Display Label	Feature Btn

Forward

Assign a button to activate the forwarding of a user's calls to another extension or to an outside number.

Summary: Forward

Telephones	Single-line, analog multiline, MLX telephones (except QCC)
Mode	All
Programmable by	User and system manager
Programming Code	*33
Display Label	Forward

Group Calling

Assign buttons to allow the calling group supervisor to monitor the number of calls in the queue or to change calling group members' availability to take calls.

Summary: Calls-In-Queue Alarm Button

Telephones	Analog multiline and MLX telephones
Mode	All
Programmable by	User and system manager
Programming Code	*22 + calling group ext. no. + Enter
Display Label	Group Call

Summary: Calling Group Supervisor

Telephones	Analog multiline, MLX-28D, MLX-20L
Mode	All
Programmable by	User and system manager
Programming Code	ES2, Available: *762 ES Off, Unavailable: *760
Display Label	OperatorES, ES2/ES Off

Summary: Calling Group Members

Telephones	Single-line, analog multiline, MLX telephones
Mode	All
Programmable by	User and system manager
Programming Code	Sign-in, Available: *44 After-Call Work State, MS only: *45
Display Label	ES Status, ES2/ES1

Group Page Auto Dial Button

Assign a button to allow the user to broadcast an announcement to individuals or groups using a speakerphone or loudspeaker.

Summary: Group Page Auto Dial button

Telephones	Analog multiline and MLX telephones
Mode	All
Programmable by	User and system manager
Programming Code	*22 + paging group ext. no. + Enter
Display Label	Group Page

Headset

Program headset buttons on MLX telephones only.

Summary: Headset Auto Answer

Assign a button to automatically answer a ringing call.

Telephones	MLX telephones only
Mode	All
Programmable by	User and system manager
Programming Code	*780
Display Label	Hdset Auto Answer

Summary: Headset Hang Up

Assign a button to use to disconnect a call.

Telephones	MLX telephones only
Mode	All
Programmable by	System manager only
Programming Code	*781
Display Label	Hdset Hang Up

Summary: Headset Mute

Assign a button to turn microphone operation on or off for both headset and handset.

Telephones	MLX telephones only
Mode	All
Programmable by	User and system manager
Programming Code	*783
Display Label	Hdset Mute

Summary: Headset Status

Assign a button to activate headset operation.

Telephones	MLX telephones only
Mode	All
Programmable by	User and system manager
Programming Code	*782
Display Label	Hdset Status

Last Number Dial

Assign a button to redial the last number dialed.

Summary: Last Number Dial

Telephones	All
Mode	All
Programmable by	User and system manager
Programming Code	*84
Display Label	LastNumDial

Messaging

Assign a button to allow users to send, receive, and post messages.

Summary: Leave Message After Calling

Telephones	Analog multiline and MLX telephones
Mode	All
Programmable by	User and system manager
Programming Code	*25
Display Label	Leave Msg

Summary: Leave Message–Message LED Off

Telephones	Analog multiline and MLX telephones
Mode	All
Programmable by	User and system manager
Programming Code	*54
Display Label	none

Summary: Posted Message

Telephones	Analog multiline and MLX telephones
Mode	All
Programmable by	User and system manager
Programming Code	*751
Display Label	Posted Msg

Summary: Send/Remove Message

Telephones	DLC operator only
Mode	All
Programmable by	User and system manager
Programming Code	*38
Display Label	Send/RmvMsg

Summary: Receiving Messages–Delete

Telephones	Analog multiline display only
Mode	All
Programmable by	User and system manager
Programming Code	*26
Display Label	Messages Delete Msg

Summary: Receiving Messages–Next

Telephones	Analog multiline display only
Mode	All
Programmable by	User and system manager
Programming Code	*28
Display Label	Messages Next Msg

Summary: Receiving Messages–Return Call

Telephones	Analog multiline display only
Mode	All
Programmable by	User and system manager
Programming Code	*27
Display Label	Return Call

Summary: Receiving Messages–Scroll

Telephones	Analog multiline display only
Mode	All
Programmable by	User and system manager
Programming Code	*29
Display Label	Scroll Msg

Night Service

Assign a button to activate telephone operation after normal business hours.

Summary: Night Service

Telephones	DLC operator only
Mode	All
Programmable by	Operators and system manager
Programming Code	*39
Display Label	Night Srvc

Notify

Assign buttons to allow users to send a visual signal to another extension without making a call to that extension.

Summary: Notify–Send and Receive

Telephones	Analog multiline and MLX telephones
Mode	All
Programmable by	User and system manager
Programming Code	Send: *757 + ext. no. + Enter
	Receive: *758 + ext. no. + Enter
Display Label	Notify Send/Receive

Park

Assign a button to hold a call and allow the call to be picked up at any telephone in the system.

Summary: Park

Telephones	All (except single-line telephones in Behind Switch mode)
Mode	All
Programmable by	User and system manager
Programming Code	*86
Display Label	Park

Park Zone Auto Dial

Assign a button to allow DLC operators to hold a call at a specified extension or park zone.

Summary: Park Zone Auto Dial

Telephones	DLC operator only
Mode	All
Programmable by	User and system manager
Programming Code	*22 + Park Zone + Enter
Display Label	Park Zone

Personal Speed Dial

Use this procedure to program codes that allow users to dial outside numbers by dialing a 2-digit code.

Summary: Personal Speed Dial

Telephones	Single-line, analog multiline, and telephones with 10 or fewer buttons
Mode	All
Programmable by	User and system manager
Programming Code	# + (01 to 24) + *21 + tel. no. + # + Enter
Display Label	SysSpeedDl

Pickup

Assign buttons to allow users to answer calls that are ringing, parked, or on hold anywhere in the system.

Summary: Pickup–General Use, Specific Extension, Specific Line

Telephones	All
Mode	All
Programmable by	User and system manager
Programming Code	General: *9 Specific line or ext.: *9 + line no./ext. no. + Enter Group: *88
Display Label	General Use, Specific Extension, Specific Line: Pickup General/Extension/Line Group: Pickup Group

Privacy

Assign a button to prevent other users from connecting to a call on this telephone.

Summary: Privacy

Telephones	All
Mode	All
Programmable by	User and system manager
Programming Code	*31
Display Label	Privacy

Recall

Assign a button to send a switchhook flash.

Summary: Recall

Telephones	Analog multiline and MLX telephones
Mode	All
Programmable by	User and system manager
Programming Code	*775
Display Label	Recall

Reminder Service

Assign buttons to allow the system to make calls automatically at preset times and cancel reminder service calls and operator reminder calls that were not answered.

Summary: Set, Cancel, or Missed Reminder Service

Telephones	All
Mode	All
Programmable by	User and system manager
Programming Code	Set: *81 Cancel: **81 Missed: *752
Display Label	Reminder Set/Cancel/Missed

Ringing/Idle Line Preference

Use this procedure to turn on Ringing/Idle Line Preference.

Summary: Ringing and Idle Line Preference

Telephones	Analog multiline and MLX telephones
Mode	All
Programmable by	User and system manager
Programming Code	On: *343 Off: *344
Display Label	Line Prefer, On/Off

Ringing Options

Summary: Personalized Ringing

Use this procedure to individualize the telephone ring.

Telephones	Analog multiline and MLX telephones
Mode	Hybrid/PBX, Key, Behind Switch
Programmable by	User and system manager
Programming Code	*32 + ring pattern (1 to 8)
Display Label	Personal Ring Pattern #*n*

Summary: Ring Timing Options

Use this procedure to establish whether and how the individual lines or all lines ring at a telephone.

Telephones	Analog multiline and MLX telephones
Mode	All
Programmable by	User and system manager
Programming Code	Individual Lines: Immediate: *37 Delay: *36 No Ring: *35 All Lines: Immediate: *347 Delay: *346 No Ring: *345

Display Label	Individual Lines:
	`Ring Options One Line Immed/Delay/No Ring`
	All Lines:
	`Ring Options All Lines Immed/Delay/No Ring`

Summary: Abbreviated Ringing Options

Use this procedure to turn abbreviated ringing on or off.

Telephones	Analog multiline and MLX telephones
Mode	All
Programmable by	User and system manager
Programming Code	On: *341 Off: *342
Display Label	`Ring Options Abbreviated On/Off`

Summary: Send Ringing Options

Override Delay Ring on an extension with **Shared SA** buttons.

Telephones	All
Mode	Hybrid/PBX
Programmable by	User and system manager
Programming Code	On: *15 Off: **15
Display Label	`Shared SA Ring On/Off`

Saved Number Dial

Assign a button to selectively save the last number dialed and call that number again without manually redialing.

Summary: Saved Number Dial

Telephones	Analog multiline and MLX telephones
Mode	All
Programmable by	User and system manager
Programming Code	*85
Display Label	SaveNumDial

Send/Remove Message

Assign a button to allow the system operator to turn the Message LED on or off for any telephone connected to the system.

Summary: Send/Remove Message

Telephones	DLC operator only
Mode	All
Programmable by	User and system manager
Programming Code	*38
Display Label	Send/RmvMsg

Signaling

Assign a button to allow a user to send an audible signal to another extension without making a call to that extension.

Summary: Signaling (manual)

Telephones	Analog multiline and MLX telephones
Mode	All
Programmable by	User and system manager
Programming Code	*23 + ext. no. + Enter
Display Label	Signal

System Access/Intercom Buttons

Assign Intercom or System Access buttons on telephones.

Summary: Assign System Access/Intercom Buttons

Telephones	All
Mode	Intercom buttons Key, Behind Switch
	System Access buttons Hybrid/PBX
Programmable by	System manager only
Programming Code	Intercom buttons: Assign Intercom Ring button: *16 Assign Intercom Originate Only button: *18
	System Access buttons: Assign Ring button: *16 Assign Originate Only button: *18
Display Label	SysAccess/SysAcc-□□

Summary: Assign Shared System Access Buttons

Telephones	All
Mode	Hybrid/PBX
Programmable by	System manager only
Programming Code	*17 + primary ext. no.
Display Label	ShareSysAcc

Summary: Change Type of System Access Button

Telephones	All
Mode	Intercom buttons: Key, Behind Switch
	System Access buttons: Hybrid/PBX
Programmable by	User and system manager
Programming Code	Ring: **19
	Voice: *19
Display Label	Voice Annce, Place Ring/Voice

System Speed Dial

Assign a button to dial any 3-digit speed dial code.

Summary: System Speed Dial

Telephones	All
Mode	All
Programmable by	User and system manager
Programming Code	*24 + 3-digit code (600–729) + Enter
Display Label	SysSpeedDl

Transfer

Assign a button to access the host system Transfer feature.

Summary: Transfer

Telephones	Analog multiline and MLX telephones
Mode	Behind Switch
Programmable by	User and system manager
Programming Code	*774
Display Label	Transfer

Voice Announce

Allow users to receive or prevent inside calls over their speakerphones when they are busy on another call.

Summary: Voice Announce

Telephones	Analog multiline and MLX telephones
Mode	All
Programmable by	User and system manager
Programming Code	On: *10
	Off: **10
Display Label	Voice Annce Receive On/Off

Customer Support Information

A

Support Telephone Number

In the U.S.A. only, AT&T provides a toll-tree customer Helpline (1 800 628-2888) 24 hours a day. If you need assistance when installing, programming, or using your system, call the Helpline, or your AT&T representative. Consultation charges may apply.

Outside the U.S.A., if you need assistance when installing, programming, or using your system, contact your AT&T representative.

Federal Communications Commission (FCC) Electromagnetic Interference Information

This equipment has been tested and found to comply with the limits for a Class A digital device, pursuant to Part 15 of the FCC Rules. These limits are designed to provide reasonable protection against harmful interference when the equipment is operated in a commercial environment. This equipment generates, uses, and can radiate radio frequency energy and, if not installed and used in accordance with the instruction manual, may cause harmful interference to radio communications. Operation of this equipment in a residential area is likely to cause harmful interference, in which case the user will be required to correct the interference at his or her own expense.

Canadian Department of Communications (DOC) Interference Information

This digital apparatus does not exceed the Class A limits for radio noise emissions set out in the radio interference regulations of the Canadian Department of Communications.

Le Présent Appareil Numérique n'émet pas de bruits radioelectriques depassant les limites applicables aux appareils numériques de la class A préscrites dans le reglement sur le brouillage radioelectrique edicté par le ministère des Communications du Canada.

FCC Notification and Repair Information

This equipment is registered with the FCC in accordance with Part 68 of its rules. In compliance with those rules, you are advised of the following:

- **Means of Connection.** Connection of this equipment to the telephone network shall be through a standard network interface jack, USOC RJ11C, RJ14C, RJ21X. Connection to E&M tie trunks requires a USOC RJ2GX. Connection to off-premises extensions requires a USOC RJ11C or RJ14C. Connection to 1.544-Mbps digital facilities must be through a USOC RJ48C or RJ48X. Connection to DID requires a USOC RJ11C, RJ14C, or RJ21X. These USOCs must be ordered from your telephone company. Connection to 56-Kbps or 64-Kbps facilities requires a USOC RJ11C, RJ14C, or RJ21.
- **Party Lines and Coin Telephones.** This equipment may not be used with party lines or coin telephone lines.
- **Notification to the Telephone Companies.** Before connecting this equipment, you or your equipment supplier must notify your local telephone company's business office of the following:
  - The telephone number(s) you will be using with this equipment.
  - The appropriate registration number and ringer equivalence number (REN), which can be found on the back or bottom of the control unit, as follows:
    - If this equipment is to be used as a Key system, report the number AS593M-72914-KF-E.
    - If the system provides both manual and automatic selection of incoming/outgoing access to the network, report the number AS593M-72682-MF-E.

- If there are no directly terminated trunks, or if the only directly terminated facilities are personal lines, report the number AS5USA-65646-PF-E.
- The REN (Ringer Equivalence Number) for all three systems is 1.5A.

— The facility interface code (FIC) and service order code (SOC):

- For tie line connection, the FIC is TL31M and the SOC is 9.0F.
- For connection to off-premises stations, the FIC is OL13C and the SOC is 9.0F.
- For equipment to be connected to DID facilities, the FIC is 02RV2-T and the SOC is AS.2.
- For equipment to be connected to 1.544-Mbps digital service, the SOC is 6.0P and the FIC is:
  - 04DU9-BN for D4 framing format with AMI zero code suppression.
  - 04DU9-DN for D4 framing format with bipolar 8 zero code suppression (B8ZS).
  - 04DU9-IKN for extended superframe format (ESF) with AMI zero code suppression.
  - 04DU9-ISN with ESF and B8ZS.
- For equipment to be connected to 56-Kbps or 64-Kbps digital facilities, the FIC is 02B1Q.

— The quantities and USOC numbers of the jacks required.

— For each jack, the sequence in which lines are to be connected, the line types, the FIC, and the REN by position when applicable.

- **Ringer Equivalence Number (REN).** The REN is used to determine the number of devices that may be connected to the telephone line. Excessive RENs on the line may result in the devices not ringing in response to an incoming call. In most, but not all, areas the sum of the RENs should not exceed five (5.0). To be certain of the number of devices that may be connected to the line, as determined by the total RENs, contact the local telephone company to determine the maximum REN for the calling area.
- **Disconnection.** You must also notify your local telephone company if and when this equipment is permanently disconnected from the line(s).

Installation and Operational Procedures

The manuals for your system contain information about installation and operational procedures.

- **Repair Instructions.** If you experience trouble because your equipment is malfunctioning, the FCC requires that the equipment not be used and that it be disconnected from the network until the problem has been corrected. Repairs to this equipment can be made only by the manufacturers, their authorized agents, or others who may be authorized by the FCC. In the event repairs are needed on this equipment, contact your authorized AT&T dealer or, **in the U.S.A. only**, contact the National Service Assistance Center (NSAC) at 1 800 628-2888.
- **Rights of the Local Telephone Company.** If this equipment causes harm to the telephone network, the local telephone company may discontinue your service temporarily. If possible, they will notify you in advance. But if advance notice is not practical, you will be notified as soon as possible. You will also be informed of your right to file a complaint with the FCC.
- **Changes at Local Telephone Company.** Your local telephone company may make changes in its facilities, equipment, operations, or procedures that affect the proper functioning of this equipment. If they do, you will be notified in advance to give you an opportunity to maintain uninterrupted telephone service.
- **Hearing Aid Compatibility.** The custom telephone sets for this system are compatible with inductively coupled hearing aids as prescribed by the FCC.
- **Automatic Dialers.** WHEN PROGRAMMING EMERGENCY NUMBERS AND/OR MAKING TEST CALLS TO EMERGENCY NUMBERS:
  - Remain on the line and briefly explain to the dispatcher the reason for the call.
  - Perform such activities in off-peak hours, such as early morning or late evening.
- **Direct Inward Dialing (DID).** This equipment returns answer supervision signals to the Public Switched Telephone Network when:
  - Answered by the called station
  - Answered by the attendant
  - Routed to a recorded announcement that can be administered by the customer premises equipment user
  - Routed to a dial prompt

This equipment returns answer supervision on all DID calls forwarded back to the Public Switched Telephone Network. Permissible exceptions are when:

— A call is unanswered

— A busy tone is received

— A reorder tone is received

Allowing this equipment to be operated in such a manner as not to provide proper answer supervision signaling is in violation of Part 68 rules.

New Network Area and Exchange Codes. The MERLIN LEGEND software does not restrict access to any new area codes or exchange codes established by a local telephone company. If the user has established toll restrictions on the system that could restrict access, then the user should check the lists of allowed and disallowed dial codes and modify them as needed.

Equal Access Codes. This equipment is capable of providing users access to interstate providers of operator services through the use of access codes. Modifications of this equipment by call aggregators to block access dialing codes is a violation of the Telephone Operator Consumers Act of 1990.

DOC Notification and Repair Information

NOTICE: The Canadian Department of Communications (DOC) label identifies certified equipment. This certification means that the equipment meets certain telecommunications network protective, operational, and safety requirements. The DOC does not guarantee the equipment will operate to the user's satisfaction.

Before installing this equipment, users should ensure that it is permissible to connect it to the facilities of the local telecommunications company. The equipment must also be installed using an acceptable method of connection. In some cases, the company's inside wiring for single-line individual service may be extended by means of a certified connector assembly (telephone extension cord). The customer should be aware that compliance with the above conditions may not prevent degradation of service in some situations.

Repairs to certified equipment should be made by an authorized Canadian maintenance facility designated by the supplier. Any repairs or alterations made by the user to this equipment, or any equipment malfunctions, may give the telecommunications company cause to request the user to disconnect the equipment.

Users should ensure for their own protection that the electrical ground connections of the power utility, telephone lines, and internal metallic water pipe system, if present, are connected. This precaution may be particularly important in rural areas.

CAUTION:
Users should not attempt to make such connections themselves, but should contact the appropriate electrical inspection authority or electrician, as appropriate.

To prevent overloading, the Load Number (LN) assigned to each terminal device denotes the percentage of the total load to be connected to a telephone loop used by the device. The termination on a loop may consist of any combination of devices subject only to the requirement that the total of the Load Numbers of all the devices does not exceed 100.

DOC Certification No.: 230 4095A
CSA Certification No.: LR 56260
Load No.: 6

Renseignements sur la notification du ministère des Communications du Canada et la réparation

AVIS: L'étiquette du ministère des Communications du Canada identifie le matériel homologué. Cette étiquette certifie que le matériel est conforme à certaines normes de protection, d'exploitation et de sécurité des réseaux de télécommunications. Le Ministère n'assure toutefois pas que le matériel fonctionnera à la satisfaction de l'utilisateur.

Avant d'installer ce matériel, l'utilisateur doit s'assurer qu'il est permis de le raccorder aux installations de l'entreprise locale de télécommunication. Le matériel doit également être installé en suivant une méthode acceptée de raccordement. Dans certains cas, les fils intérieurs de l'enterprise utilisés pour un service individuel à ligne unique peuvent être prolongés au moyen d'un dispositif homologué de raccordement (cordon prolongateur téléphonique interne). L'abonné ne doit pas oublier qu'il est possible que la conformité aux conditions énoncées ci-dessus n'empêchent pas la dégradation du service dans certaines situations. Actuellement, les entreprises de télécommunication ne permettent pas que l'on raccorde leur matériel à des jacks d'abonné, sauf dans les cas précis prévus pas les tarifs particuliers de ces entreprises.

Les réparations de matériel homologué doivent être effectuées par un centre d'entretien canadien autorisé désigné par le fournisseur. La compagnie de télécommunications peut demander à l'utilisateur de débrancher un appareil à la suite de réparations ou de modifications effectuées par l'utilisateur ou à cause de mauvais fonctionnement.

Pour sa propre protection, l'utilisateur doit s'assurer que tous les fils de mise à la terre de la source d'énergie électrique, des lignes téléphoniques et des canalisations d'eau métalliques, s'il y en a, sont raccordés ensemble. Cette précaution est particuliérement importante dans les régions rurales.

AVERTISSEMENT: L'utilisateur ne doit pas tenter de faire ces raccordements lui-même; il doit avoir recours à un service d'inspection des installations électriques, ou à un electricien, selon le cas.

L'indice de charge (IC) assigné à chaque dispositif terminal indique, pour éviter toute surcharge, le pourcentage de la charge totale qui peut être raccordée à un circuit téléphonique bouclé utilisé par ce dispositif. La terminaison du circuit bouclé peut être constituée de n'importe quelle combinaison de dispositifs, pourvu que la somme des indices de charge de l'ensemble des dispositits ne dépasse pas 100.

No d'homologation: 230 4095A
No de certification: CSA LR 56260
L'indice de charge: 6

MERLIN LEGEND D.O.C. Location Label Placement

Ministère des Communications du Canada emplacement de l'étiquette

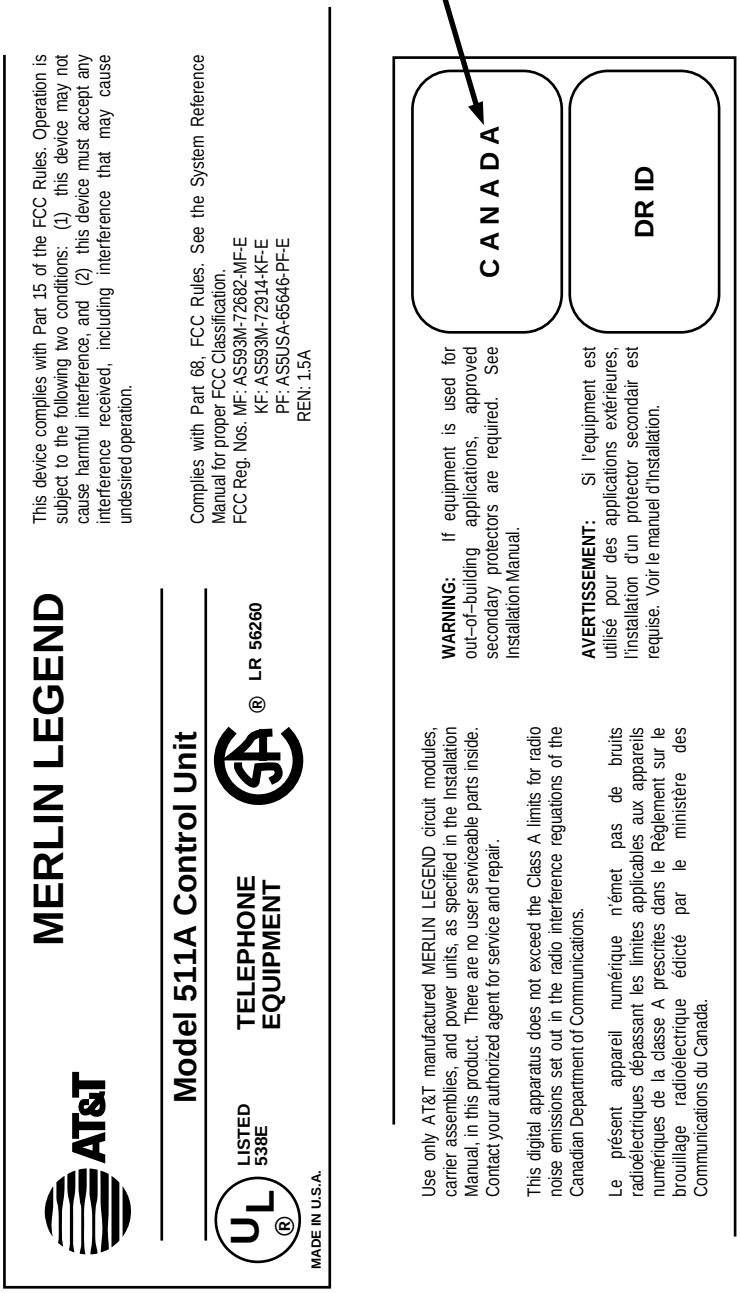

Security of Your System: Preventing Toll Fraud

As a customer of a new telephone system, you should be aware that there is an increasing problem of telephone toll fraud. Telephone toll fraud can occur in many forms, despite the numerous efforts of telephone companies and telephone equipment manufacturers to control it. Some individuals use electronic devices to prevent or falsify records of these calls. Others charge calls to someone else's number by illegally using lost or stolen calling cards, billing innocent parties, clipping on to someone else's line, and breaking into someone else's telephone equipment physically or electronically. In certain instances, unauthorized individuals make connections to the telephone network through the use of the Remote Access features of your system.

The Remote Access features of your system, if you choose to use them, permit off-premises callers to access the system from a remote telephone by using a telephone number with or without a barrier code. The system returns an acknowledgment signaling the user to key in his or her barrier code, which is selected and administered by the system manager. After the barrier code is accepted, the system returns dial tone to the user. In Release 3.1 and later systems, barrier codes are by default restricted from making outside calls. In prior releases, if you do not program specific outward calling restrictions, the user will be able to place any call normally dialed from a telephone associated with the system. Such an off-premises network call is originated at, and will be billed from, the system location.

The Remote Access feature, as designed, helps the customer, through proper administration, to minimize the ability of unauthorized persons to gain access to the network. Most commonly, phone numbers and codes are compromised when overheard in a public location, through theft of a wallet or purse containing access information, or through carelessness (for example, writing codes on a piece of paper and improperly discarding it). Additionally, hackers may use a computer to dial an access code and then publish the information to other hackers. Enormous charges can be run up quickly. It is the customer's responsibility to take the appropriate steps to properly implement the features, evaluate and administer the various restriction levels, protect access codes, and distribute access codes only to individuals who have been fully advised of the sensitive nature of the access information.

Common carriers are required by law to collect their tariffed charges. While these charges are fraudulent charges made by persons with criminal intent, applicable tariffs state that the customer of record is responsible for payment of all long-distance or other network charges. AT&T cannot be responsible for such charges and will not make any allowance or give any credit for charges that result from unauthorized access.

To minimize the risk of unauthorized access to your communications system:

- Use a nonpublished Remote Access number.
- Assign access codes randomly to users on a need-to-have basis, keeping a log of *all* authorized users and assigning one code to one person.
- Use random-sequence access codes, which are less likely to be easily broken.
- Use the longest-length access codes the system will allow.
- Deactivate all unassigned codes promptly.
- Ensure that Remote Access users are aware of their responsibility to keep the telephone number and any access codes secure.
- When possible, restrict the off-network capability of off-premises callers, using calling restrictions, Facility Restriction Levels (Hybrid/PBX mode only), and Disallowed List capabilities. In Release 3.1 and later systems, a prepared Disallowed List (number 7) is provided and is designed to prevent the types of calls that toll-fraud abusers often make.
- When possible, block out-of-hours calling.
- Frequently monitor system call detail reports for quicker detection of any unauthorized or abnormal calling patterns.
- Limit Remote Call Forwarding to persons on a need-to-have basis.
- Change access codes every 90 days.
- Use the longest-length barrier codes possible, following the guidelines for passwords. (See “Choosing Passwords.”)

Toll Fraud Prevention

Toll fraud is the unauthorized use of your telecommunications system by third parties to make long distance telephone calls. Under the law, you, the customer, are responsible for paying part or all of those unauthorized calls. Thus, the following information is of critical importance.

Unauthorized persons concentrate their activities in two areas with the MERLIN LEGEND Communications System:

- They try to transfer out of the MERLIN LEGEND Communications System to gain access to an outgoing trunk and make long distance calls.
- They try to locate unused or unprotected mailboxes and use them as drop-off points for their own messages.

The following is a discussion of how toll fraud is often perpetrated and ways to prevent unauthorized access that can lead to toll fraud.

Physical Security, Social Engineering, and General Security Measures

Criminals called *hackers* may attempt to gain unauthorized access to your communications system and voice messaging system in order to use the system features. Hackers often attempt to trick employees into providing them with access to a network facility (line/trunk) or a network operator. This is referred to as social engineering. Hackers may pose as telephone company employees and employees of AT&T or your authorized dealer. Hackers will go through a company's trash to find directories, dialing instructions, and other information that will enable them to break into the system. The more knowledgeable they appear to be about the employee names, departments, telephone numbers, and the internal procedures of your company, the more likely it is that they will be able to trick an employee into helping them.

Preventive Measures

Take the following preventive measures to limit the risk of unauthorized access by hackers:

- Provide good physical security for the room containing your telecommunications equipment and the room with administrative tools, records, and system manager information. These areas should be locked when not attended.
- Provide a secure trash disposal for all sensitive information, including telephone directories, call accounting records, or anything that may supply information about your communications system. This trash should be shredded.
- Educate employees that hackers may try to trick them into providing them with dial tone or dialing a number for them. All reports of trouble, requests for moving extensions, or any other administrative details associated with the MERLIN LEGEND Communications System should be handled by one person (the system manager) or within a specified department. Anyone claiming to be a telephone company representative should be referred to this person or department.
- No one outside of AT&T needs to use the MERLIN LEGEND Communications System to test facilities (lines/trunks). If a caller identifies him or herself as an AT&T employee, the system manager should ask for a telephone number where the caller can be reached. The system manager should be able to recognize the number as an AT&T telephone number. *Before connecting the caller to the administrative port of the MERLIN LEGEND Communications System, the system manager should feel comfortable that a good reason to do so exists*. In any event, it is not advisable to give anyone access to network facilities or operators, or to dial a number at the request of the caller.

- Any time a call appears to be suspicious, call the AT&T GBCS Fraud Intervention Center at 1 800 628-2888 (fraud intervention for System 25, PARTNER® and MERLIN® systems).
- Customers should also take advantage of AT&T monitoring services and devices, such as the NetPROTECT℠ family of fraud detection services, CAS with HackerTracker®, and CAT Terminal with Watchdog. Call 1 800 638-7233 to get more information on these AT&T fraud detection services and products.

Security Risks Associated with Transferring through voice messaging systems

Toll fraud hackers try to dial into a voice mailbox and then execute a transfer by dialing [*] [T]. The hacker then dials an access code (either [9] for Automatic Route Selection or a pooled facility code) followed by the appropriate digit string to either direct dial or access a network operator to complete the call.

NOTE:
In Release 3.1 and later systems, all extensions are initially and by default restricted from dial access to pools. In order for an extension to use a pool to access an outside line/trunk, this restriction must be removed.

Preventive Measures

Take the following preventive measures to limit the risk of unauthorized transfers by hackers:

- Outward restrict all MERLIN LEGEND voice mail port extensions. This denies access to facilities (lines/trunks). In Release 3.1 and later systems, voice mail ports are by default outward restricted.
- As an additional security step, network dialing for all extensions, including voice mail port extensions, should be processed through ARS using dial access code [9].

Security Alert:
The MERLIN LEGEND system ships with ARS activated with all extensions set to Facility Restriction Level 3, allowing all international calling. ***To prevent toll fraud****, ARS Facility Restriction Levels (FRLs) should be established using:*

- *FRL 0 for restriction to internal dialing only*
- *FRL 2 for restriction to local network calling only*
- *FRL 3 for restriction to domestic long distance (excluding area code 809 for the Dominican Republic as this is part of the North American Numbering Plan, unless 809 is required)*
- *FRL 4 for international calling*

In Release 3.1 and later systems, default local and default toll tables are factory-assigned an FRL of 2. This simplifies the task of restricting extensions: the FRL for an extension merely needs to be changed from the default of 3.

Each extension should be assigned the appropriate FRL to match its calling requirements. ***All voice mail port extensions not used for Outcalling should be assigned to FRL 0 (the default setting in Release 3.1 and later).***

- Deny access to pooled facility codes by removing pool dial-out codes 70, 890-899, or any others on your system.
- Create a Disallowed List or use the pre-prepared Disallowed List number 7 (Release 3.1 and later systems only) to disallow dialing 0, 11, 10, 1700, 1809, 1900, and 976 or 1(wildcard)976. In Release 3.1 and later systems, Disallowed List number 7 does not include 800 and 1800 and 411 and 1411, but AT&T recommends that you add them. **Assign all voice mail port extensions to this Disallowed List. AT&T recommends assigning Disallowed List number 7.** ***This is an added layer of security, in case outward restriction is inadvertently removed.*** (In Release 3.1 and later systems, voice messaging ports are assigned by default to Disallowed List number 7.)

If Outcalling is required by voice messaging system extensions:

- Program an ARS Facility Restriction Level (FRL) of 2 on voice mail port extension(s) used for Outcalling.
- If 800 and 411 numbers are used, remove 1800, 800, 411, and 1411 from Disallowed List number 7.
- If Outcalling is allowed to long distance numbers, build an Allowed List for the voice mail port extension(s) used for Outcalling. This list should contain the area code and the first three digits of the local exchange telephone numbers to be allowed.

Additional general security for voice messaging systems:

- Use a secure password for the General Mailboxes.
- The default administration mailbox, 9997, must be reassigned to the system manager's mailbox/extension number and securely password protected.
- All voice messaging system users must use secure passwords known only to the user.

Security Risks Associated with the Automated Attendant Feature of voice messaging systems

Two areas of toll fraud risk associated with the Automated Attendant feature of voice messaging systems are the following:

- Pooled facility (line/trunk) access codes are translated to a menu prompt to allow Remote Access. If a hacker finds this prompt, the hacker has immediate access. (In Release 3.1 and later systems, dial access to pools is initially factory-set to restrict all extensions: to allow pool access, this restriction must be removed by the system manager.
- If the Automated Attendant prompts callers to use Remote Call Forwarding (RCF) to reach an outside telephone number, the system may be susceptible to toll fraud. An example of this application is a menu or Submenu that says, "To reach our answering service, select prompt number 5," and transfers a caller to an external telephone number.

  Remote Call Forwarding can only be used securely when the central office provides "reliable disconnect" (sometimes referred to as forward disconnect or disconnect supervision), which guarantees that the central office will not return a dial tone after the called party hangs up. In most cases, the central office facility is a loop-start line/trunk which does not provide reliable disconnect. When loop-start lines/trunks are used, if the calling party stays on the line, the central office will return a dial tone at the conclusion of the call, enabling the caller to place another call as if it were being placed from your company. Ground-start trunks provide reliable disconnect and should be used whenever possible.

Preventive Measures

Take the following preventive measures to limit the risk of unauthorized use of the Automated Attendant feature by hackers:

- *Do not* use Automated Attendant prompts for Automatic Route Selection (ARS) Codes or Pooled Facility Codes.
- Assign all unused Automated Attendant Selector Codes to zero, so that attempts to dial these will be routed to the system attendant.

- If Remote Call Forwarding (RCF) is required, MERLIN LEGEND Communications System owners should coordinate with their AT&T Account Team or authorized dealer to verify the type of central office facility used for RCF. If it is a ground-start line/trunk, or if it is a loop-start line/trunk and central office reliable disconnect can be ensured, then nothing else needs to be done.

  NOTE:
  In most cases these will be loop-start lines/trunks without reliable disconnect. The local telephone company will need to be involved to change the facilities used for RCF to ground start lines/trunks. Usually a charge applies for this change. Also, hardware and software changes may need to be made in the MERLIN LEGEND system. The MERLIN MAIL Automated Attendant feature merely accesses the RCF feature in the MERLIN LEGEND system. Without these changes being made, this feature is highly susceptible to toll fraud. These same preventive measures must be taken if the RCF feature is active for MERLIN LEGEND system extensions whether or not it is accessed by an Automated Attendant menu.

Security Risks Associated with the Remote Access Feature

Remote Access allows the MERLIN LEGEND Communications System owner to access the system from a remote telephone and make an outgoing call or perform system administration, using the network facilities (lines/trunks) connected to the MERLIN LEGEND system. Hackers, scanning the public switched network by randomly dialing numbers with war dialers (a device that randomly dials telephone numbers, including 800 numbers, until a modem or dial tone is obtained), can find this feature, which will return a dial tone to them. They can even employ war dialers to attempt to discover barrier codes.

Preventive Measures

Take the following preventive measures to limit the risk of unauthorized use of the MERLIN LEGEND Communications System Remote Access feature by hackers:

- The Remote Access feature can be abused by criminal toll fraud hackers, if it is not properly administered. Therefore, this feature should not be used unless there is a strong business need.
- It is strongly recommended that customers invest in security adjuncts, which typically use one-time passcode algorithms. These security adjuncts discourage hackers. Since a secure use of the Remote Access feature generally offers savings over credit-card calling, the break-even period can make the investment in security adjuncts worthwhile.
- If a customer chooses to use the Remote Access feature without a security adjunct, then multiple barrier codes should be employed, with one per user if the system permits. The MERLIN LEGEND system permits a maximum of 16 barrier codes.

- The maximum length should be used for each barrier code, and should be changed periodically. Barrier codes, like passwords, should consist of a random, hard-to-guess sequence of digits. While MERLIN LEGEND Release 3.0 permits a barrier code of up to 11 digits, systems prior to Release 3.0 permit barrier codes of up to only four digits.

If Remote Access is used, an upgrade to MERLIN LEGEND Communications System Release 3.0 is encouraged to take advantage of the longer barrier code.

Other Security Hints

Make sure that the Automated Attendant Selector Codes do not permit outside line selection.

Following are a number of measures and guidelines that can help you ensure the security of your communications system and voice messaging system.

Multiple layers of security are always recommended to keep your system secure.

Educating Users

Everyone in your company who uses the telephone system is responsible for system security. Users and attendants/operators need to be aware of how to recognize and react to potential hacker activity. Informed people are more likely to cooperate with security measures that often make the system less flexible and more difficult to use.

- Never program passwords or authorization codes onto Auto Dial buttons. Display telephones reveal the programmed numbers and internal abusers can use the Auto Dial buttons to originate unauthorized calls.
- Discourage the practice of writing down barrier codes or passwords. If a barrier code or password needs to be written down, keep it in a secure place and never discard it while it is active.
- Operators or attendants should tell their system manager if they answer a series of calls where there is silence on the other end or the caller hangs up.
- Users who are assigned voice mailboxes should frequently change personal passwords and should not choose obvious passwords.
- The system manager should advise users with special telephone privileges (such as Remote Access, Outcalling, and Remote Call Forwarding) of the potential risks and responsibilities.
- Be suspicious of any caller who claims to be with the telephone company and wants to check an outside line. Ask for a callback number, hang up and confirm the caller's identity.
- Never distribute the office telephone directory to anyone outside the company; be careful when discarding it (shred the directory).

- Never accept collect telephone calls.
- Never discuss your telephone system's numbering plan with anyone outside the company.

Educating Operators

Operators or attendants need to be especially aware of how to recognize and react to potential hacker activity. To defend against toll fraud, operators should follow the guidelines below:

- Establish procedures to counter *social engineering*. Social engineering is a con game that hackers frequently use to obtain information that may help them gain access to your communications system or voice messaging system.
- When callers ask for assistance in placing outside or long-distance calls, ask for a callback extension.
- Verify the source. Ask callers claiming to be maintenance or service personnel for a callback number. Never transfer to *10 without this verification. Never transfer to extension 900.
- Remove the headset and/or handset when the console is not in use.

Detecting Toll Fraud

To detect toll fraud, users and operators should look for the following:

- Lost voice mail messages, mailbox lockout, or altered greetings
- Inability to log into voice mail
- Inability to get an outside line
- Foreign language callers
- Frequent hang-ups
- Touch-tone sounds
- Caller or employee complaints that the lines are busy
- Increases in internal requests for assistance in making outbound calls (particularly international calls or requests for dial tone)
- Outsiders trying to obtain sensitive information
- Callers claiming to be the "phone" company
- Sudden increase in wrong numbers

Establishing a Policy

As a safeguard against toll fraud, follow these guidelines for your MERLIN LEGEND Communications System and voice messaging system:

- Change passwords frequently (at least quarterly). Changing passwords routinely on a specific date (such as the first of the month) helps users to remember to do so.
- Always use the longest-length password allowed.
- Establish well-controlled procedures for resetting passwords.
- Limit the number of invalid attempts to access a voice mailbox to five or less.
- Monitor access to the MERLIN LEGEND dial-up maintenance port. Change the access password regularly and issue it only to authorized personnel. Disconnect the maintenance port when not in use. (However, this eliminates AT&T's 24-hour maintenance surveillance capability and may result in additional maintenance costs.)
- Create a communications system management policy concerning employee turnover and include these suggestions:
  - Delete all unused voice mailboxes in the voice mail system.
  - If a terminated employee had Remote Access calling privileges and a personal authorization code, remove the authorization code immediately.
  - If barrier codes and/or authorization codes were shared by the terminated employee, these should be changed immediately.
- Regularly back up your MERLIN LEGEND system files to ensure a timely recovery should it be required. Schedule regular, off-site backups.
- Keep the Remote Maintenance Device turned off when not in use by AT&T or your authorized dealer.
- Limit transfers to registered subscribers only.
- Use the Security Violations Notification options (Mailbox Lock or Warning Message) to alert you of any mailbox break-in attempts. Investigate all incidents.
- Review security policies and procedures and keep them up to date.

Choosing Passwords

Passwords should be the maximum length allowed by the system.

Passwords should be hard to guess and should ***not*** contain:

- All the same numbers (for example, 1111, 666666)
- Sequential characters (for example 123456)
- Numbers that can be associated with you or your business, such as your name, birthday, business name, business address, telephone number, or social security number.
- Words and commonly used names.

Passwords should be changed regularly, at least on a quarterly basis. Recycling old passwords is not recommended. Never program passwords (or authorization codes or barrier codes) onto a speed dial button.

Physical Security

You should always limit access to the system console (or attendant console) and supporting documentation. The following are some recommendations:

- Keep the system console and supporting documentation in an office that is secured with a changeable combination lock. Provide the combination only to those individuals having a real need to enter the office.
- Keep telephone wiring closets and equipment rooms locked.
- Keep telephone logs and printed reports in locations that only authorized personnel can enter.
- Design distributed reports so they do not reveal password or trunk access code information.
- Keep the voice messaging system Remote Maintenance Device turned off.

Limiting Outcalling

When Outcalling is used to contact subscribers who are off-site, use the MERLIN LEGEND Communications System Allowed Lists and Disallowed Lists or Automatic Route Selection features to minimize toll fraud.

If the Outcalling feature will not be used, outward restrict all voice messaging system ports. If Outcalling will be used, ports not used for Outcalling should be Outward Restricted (for Merlin Mail Voice Messaging Systems, port 2 on a two-port system, port 4 on a four-port system, ports 5 and 6 on a six-port system). Use Outward Restriction, Toll Restrictions, Allowed Lists, Disallowed Lists and Facility Restrcitions Levels, as appropriate to minimize the possibility of toll fraud.

Limited Warranty and Limitation of Liability

AT&T warrants to you, the customer, that your MERLIN LEGEND Communications System will be in good working order on the date AT&T or its authorized reseller delivers or installs the system, whichever is later ("Warranty Date"). If you notify AT&T or its authorized reseller within one year of the Warranty Date that your system is not in good working order, AT&T will without charge to you repair or replace, at its option, the system components that are not in good working order. Repair or replacement parts may be new or refurbished and will be provided on an exchange basis. If AT&T determines that your system cannot be repaired or replaced, AT&T will remove the system and, at your option, refund the purchase price of your system, or apply the purchase price towards the purchase of another AT&T system.

If you purchased your system directly from AT&T, AT&T will perform warranty repair in accordance with the terms and conditions of the specific type of AT&T maintenance coverage you selected. If you purchased your system from an AT&T-authorized reseller, contact your reseller for the details of the maintenance plan applicable to your system.

This AT&T limited warranty covers damage to the system caused by power surges, including power surges due to lightning.

The following will not be deemed to impair the good working order of the system, and AT&T will not be responsible under the limited warranty for damages resulting from:

- Failure to follow AT&T's installation, operation, or maintenance instructions
- Unauthorized system modification, movement, or alteration
- Unauthorized use of common carrier communication services accessed through the system
- Abuse, misuse, or negligent acts or omissions of the customer and persons under the customer's control
- Acts of third parties and acts of God

AT&T'S OBLIGATION TO REPAIR, REPLACE, OR REFUND AS SET FORTH ABOVE IS YOUR EXCLUSIVE REMEDY.

EXCEPT AS SPECIFICALLY SET FORTH ABOVE, AT&T, ITS AFFILIATES, SUPPLIERS, AND AUTHORIZED RESELLERS MAKE NO WARRANTIES, EXPRESS OR IMPLIED, AND SPECIFICALLY DISCLAIM ANY WARRANTIES OF MERCHANTABILITY OR FITNESS FOR A PARTICULAR PURPOSE.

Limitation of Liability

Except as provided below, the liability of AT&T and its affiliates and suppliers for any claims, losses, damages, or expenses from any cause whatsoever (including acts or omissions of third parties), regardless of the form of action, whether in contract, tort, or otherwise, shall not exceed the lesser of: (1) the direct damages proven; or (2) the repair cost, replacement cost, license fee, annual rental charge, or purchase price, as the case may be, of the equipment that gives rise to the claim. Except as provided below, AT&T and its affiliates and suppliers shall not be liable for any incidental, special, reliance, consequential, or indirect loss or damage incurred in connection with the equipment. As used in this paragraph, consequential damages include, but are not limited to, the following: lost profits, lost revenues, and losses arising out of unauthorized use (or charges for such use) of common carrier telecommunications services or facilities accessed through or connected to the equipment. For personal injury caused by AT&T's negligence, AT&T's liability shall be limited to proven damages to person. **No action or proceeding against AT&T or its affiliates or suppliers may be commenced more than twenty-four (24) months after the cause of action accrues**. THIS PARAGRAPH SHALL SURVIVE FAILURE OF AN EXCLUSIVE REMEDY.

Remote Administration and Maintenance

The Remote Administration and Maintenance feature of your telecommunications system, if you choose to use it, permits users to change the system features and capabilities from a remote location.

The Remote Administration and Maintenance feature, through proper administration, can help you reduce the risk of unauthorized persons gaining access to the network. However, telephone numbers and access codes can be compromised when overheard in a public location, are lost through theft of a wallet or purse containing access information, or through carelessness (for example, writing codes on a piece of paper and improperly discarding them). Additionally, hackers may use a computer to dial an access code and then publish the information to other hackers. Substantial charges can accumulate quickly. It is your responsibility to take appropriate steps to implement the features properly, evaluate and administer the various restriction levels, and protect and carefully distribute access codes.

Under applicable tariffs, you will be responsible for payment of toll charges. AT&T cannot be responsible for such charges and will not make any allowance or give any credit resulting from unauthorized access.

To reduce the risk of unauthorized access through Remote Administration and Maintenance, please observe the following procedures:

- The System Administration and Maintenance capability of a Hybrid/PBX or Key system is protected by a password.
  - — Change the default password immediately.
  - — Continue to change the password regularly.
  - — Only give the password to people who need it and impress upon them the need to keep it secret.
  - — If anyone who knows the password leaves the company, change the password immediately.
- If you have a special telephone line connected to your Hybrid/PBX or Key system for Remote Administration and Maintenance, you should do one of the following:
  - — Unplug the line when it is not being used.
  - — Install a switch in the line to turn it off when it is not being used.
  - — Keep the Remote Administration and Maintenance telephone number secret. Only give it to people who need to know it, and impress upon them the need to keep it a secret. Do not write the telephone number on the Hybrid/PBX or Key system, the connecting equipment, or anywhere else in the system room.
- If your Remote Administration and Maintenance feature requires that someone in your office transfer the caller to the Remote Administration and Maintenance extension, you should impress upon your employees the importance of only transferring authorized individuals to that extension.

Menu Hierarchy

B

The system programming menu hierarchy details the sequence of menu screens that appear when you select the system programming options. The choice of an option on the first menu screen leads to either a second menu screen or a data-entry screen. A secondary menu screen may lead to still another menu screen, and so on up to six screens, as shown in the following pages.

You can use the Inspect feature in system programming to display the telephone or line/trunk numbers that are programmed with a specific feature. Inspect is helpful when you must assign a feature to many lines/trunks or extensions and you do not have a Direct Station Selector (DSS) attached to the system programming console, or when you are programming using a PC with SPM.

Inspect can be used with the menu options on the following pages that have an asterisk (✱) next to them. To use Inspect in system programming, choose an eligible option, and press **Inspct** or PgDn.

System Programming

System

- **Restart**
- **SProg Port**
- **Mode**
  - Key
  - Hybrid/PBX
  - BehndSwtch
- **Board Renum**
- **MaintenBusy**
  - Enable
    - *Auto Busy Tie Trunks:*
      - *Enable*
      - *Disable*
  - Disable
- **Date**
- **Time**
- **Back/Restore**
  - Backup
  - Restore
  - Auto Backup
    - *Off*
    - *Daily*
    - *Weekly*

SysRenumber

- **Default Numbering**
  - 2-Digit
  - 3-Digit
  - SetUp Space
- **Single**
  - Lines*
  - Extensions*
  - Pools*
  - Group Page*
  - GrpCalling*
  - Adjuncts*
  - Park*
  - ARS DialOut
  - RemoteAccs
  - DSS Buttons*
  - ListDilrctNo
- **Block**
  - Lines
  - Extensions
  - Adjuncts

Operator

- **Positions**
  - Direct Line*
  - Queued Call*
- **Queued Call**
  - Hold Rtrn
    - *Return to Queue*
    - *Remain On Hold*
  - HoldRelease
    - *Auto Hold*
    - *Auto Release*
  - Threshold
  - ElvatePrior
  - InQue Alert*
    - *InQue Alert Enable*
    - *InQue Alert Disable*
  - Call Types
    - *Dial 0*
      - *Priority*
      - *Operator**
    - *Follow/Frwd*
    - *UnassignDID*
      - *Priority*
      - *Operator**
    - *ListedNumbr*
      - *Priority*
      - *Operator**
    - *QCC Ext*
    - *Returning*
      - *Priority*
      - *Operator**
    - *GrpCoverge*
      - *Priority*
      - *Operator**
  - Msg Center*
  - ExtndComplt
    - *Automatic Complete*
    - *Manual Comlete*
  - Return Ring
  - QCC Backup
- Voice Annc
- **Hold Timer**
- **DLC Hold**
  - Auto Hold Enable
  - Auto Hold Disable

LinesTrunks

- **LS/GS/DS1**
  - (DS1)
    - *Type*
      - *T1**
        - *GroundStart**
        - *Loop Start**
        - *TIE*
          - *TIE-PBX**
          - *Toll**
          - *S56*
        - *Unequipped*
        - *All Ground*
        - *All Loop*
        - *All TIE*
          - *TIE-PBX*
          - *Toll*
          - *S56*
        - *All Unequip*
        - *DID**
        - *All DID*
        - *S56 Data*
          - *Direction-*
            - *Intype*
            - *Outtype*
              - *AnsSupv*
              - *Disconnect*
              - *Inmode*
              - *Outmode*
        - *All S56 Data*
          - *Direction-*
            - *Intype*
            - *Outtype*
              - *AnsSupv*
              - *Disconnect*
              - *Inmode*
              - *Outmode*
        - *PRI*
      - *FrameFormat*
        - *D4 Compatible*
        - *Extended Super Frame*
      - *Suppression*
        - *AMI-ZCS*
        - *B8ZS*
      - *Signaling*
        - *Robbed Bit*
        - *Common Channel*
      - *Line Comp*
      - *Clock Sync*
        - *Priority*
          - *Primary*
          - *Secondary*
          - *Tertiary*
          - *None*
        - *Source*
          - *Loop*
          - *Local*
        - *Activation*
          - *Active*
          - *Not Active*
      - *ChannelUnit*
        - *Foreign Exchange*
        - *Special Access*
  - (4xx GS/LS)
    - *GroundStart**
    - *LoopStart**
    - *All Ground*
    - *All Loop*
  - *(8xxGS/LS)*
    - *GroundStart**
    - *LoopStart**
    - *All Ground*
    - *All Loop*
- **TIE Lines**
  - Direction
    - *Two Way*
    - *OutGoing*
    - *Incoming*
- Intype
  - *Wink*
  - *Delay*
  - *Immed*
  - *Auto*
- Outtype
  - *Wink*
  - *Delay*
  - *Immed*
  - *Auto*
- E&M Signal
  - *Type 1S*
  - *Type 1C*
  - *Type5*
- Inmode†
- Outmode†
- Dialtone†
- AnsSupvr
- Disconnect
- **TT/LS Disc**
  - OutMode†
  - LS Disconnect
    - *Yes*
    - *No*
- **DID**
  - Block†
  - Type
    - *Immed*
    - *Wink*
  - Disconnect
  - ExpectDigit
  - DeleteDigit
  - Add Digits
  - Signaling
    - *Rotary*
    - *TouchTone*
  - InvalDstn
    - *Send to Backup Extension*
    - *Return Fast Busy*
- **PRI**
  - PhoneNumber
  - B-ChannlGrp
    - *B Channels**
    - *Lines*†*
    - *NetworkServ*
      - *AT&T Toll*
        - *Megacom WATS*
        - *ACCUNET SDS*
        - *Soft DefNetw*
        - *Megacom 800*
        - *MULTI QUEST*
        - *Long Distnce*
      - *Local*
        - *OUTWATS*
        - *56/64 Digtl*
        - *VirtPrivNet*
        - *INWATS*
      - *Misc*
        - *Other*
        - *Call By Call*
      - *Copy Number*
        - *Copy PhnNum to NumToSend*
        - *Do not Copy Phone Number*
      - *IncomingRtg*
        - *Routing by Dial Plan*
        - *Route by Line Appearance*
  - NumbrToSend
    - *Extension Only*
    - *Base Number with Ext.*
    - *Line Telephone Number*
  - Test TelNum
- Protocol
  - *Timers*
    - *T200 Timer*
    - *T203 Timer*
    - *N200Counter*
    - *N201Counter*
    - *K Counter*
    - *T303 Timer*
    - *T305 Timer*
    - *T308 Timer*
    - *T309 Timer*
    - *T310 Timer*
    - *T313 Timer*
    - *T316 Timer*
  - *TEI*
- DialPlanRtg
  - *Service*
    - *AT&T Toll*
      - *Megacom 800*
      - *ACCUNET SDS*
      - *SoftDefNetw*
      - *MULTI QUEST*
      - *Megacom WATS*
      - *Long Distnce*
    - *Local*
      - *INWATS*
      - *56/64 Digtl*
      - *VirtPrivNet*
      - *OUTWATS*
    - *Misc*
      - *Other*
      - *Any Service*
      - No Service
  - Patterns
  - *TotalDigits*
  - *DeleteDigit*
  - *Add Digits*
- OutgoingTbl
  - ***NetwkSelect***
  - *SpecialServ*
    - *Pattern*
    - *Operator*
      - *Local Operator*
      - *Presubscribed Carrier*
      - *No Operator*
    - *TypeOfNumber*
      - *National*
      - *International*
    - *DeleteDigit*
  - *CBC Service*
    - *Patterns*
    - *Voice/Data*
      - *Voice Only*
      - *Data Only*
      - *Voice/Data*
    - *NetworkServ*
      - *AT&T Toll*
        - *Megacom WATS*
        - *ACCUNET SDS*
        - *SoftDefNetw*
        - *LongDistnce*
      - *Local*
        - *OUTWATS*
        - *56/64 Digtl*
        - *VirtPrivNet*
      - *Misc*
        - *Other*
        - *No Service*
    - *Delete Digit*
- **Copy**
  - Single
  - Block

Extensions

- **LinesTrunks†**
- **Line Copy**
  - Single
  - Block
- **Dial OutCd†**
- **Restriction**
  - Unrestricted
  - Outward Restrict
  - Toll Restrict
- **RestrctCopy**
  - Single
  - Block
- **Account***
- **BIS/HFAI***
- **Call PickUp***
- **VoiceSignl***
- **Ext Status***
- **Group Page***
- **Group Cover***
- **Grp Calling**
  - Hunt Type
    - *Circular*
    - *Linear*
  - DelayAnnce
  - GrpCoverage†
  - Message
  - Queue Alarm
  - Xtnl Alert
  - Overflow
    - ***Number Based***
    - *Time Based*
  - Members*
  - Line/Pool*
  - Group Type
    - *Auto Login*
    - *Auto Logout*
    - *Integ VMI*
    - *Generic VMI*
- **ARS Restrct**
- **Mic Disable***
- **Remote Frwd***
- **Auth Code**
- **Delay Frwd**
- **TrkTransfer**

Options

- **Transfer**
  - Return Time
  - One Touch
    - *Transfer*
      - *Manual*
      - *Automatic*
    - *Hold*
  - Audible
    - *Music On Hold*
    - *Ringback*
  - Type
    - *Voice Announce*
    - *Ring*
- **CampOn**
- **CallParkRtn**
- **Delay Ring**
- **Callback**
- **Ext Status**
  - Hotel
  - GrpCall/CMS
- **SMDR**
  - Format
    - *Basic SMDR*
    - *ISDN SMDR*
  - Call Length
  - Call Report
    - *In/Out*
    - *Out Only*
  - New Page
  - Auth Code
    - *Home Extension Number*
    - *Authorization Code*
- **Inside Dial**
  - Inside
  - Outside
- **ReminderSrv**
- **Unassigned**
  - QCC Queue
  - Extension
  - Grp Calling
- **BehndSwitch**
  - Transfer
  - Conference
  - Drop
- **RecallTimer**
  - 350 ms
  - 450 ms
  - 650 ms
  - 1 sec
- **Rotary**
  - Delay
  - No Delay
- **Cover Delay**
- **Inter-Digit**
- **Ringing Freq**
- **SecDT Timer**

Tables

- **AllowList**
- **AllowTo†**
- **Disallow**
- **DisallowTo†**
- **ARS**
  - ARS1+7Dial
    - *Within Area Code*
    - *Not Within Area Code*
  - ARS Input
    - *6-Digit*
    - *Area Code†*
    - *Exchange†*
    - *1+7†*
  - Sub A Pools
  - Sub A FRL
  - SubA Absorb
  - Sub A Digit
  - Sub B Start
  - Sub B Stop
  - Sub B Pool
  - Sub B FRL
  - SubB Absorb
  - Sub B Digit
  - SpeclNumber
    - *ARS FRL*
    - *ARS Digit*
  - Dial 0
    - *ARS Pool*
    - *ARS FRL*
    - *ARS Digits*
  - Sub A Data
    - *Voice Only*
    - *Data Only*
    - *Voice/Data*
  - Sub B Data
    - *Voice Only*
    - *Data Only*
    - *Voice/Data*

AuxEquip

- **MusicOnHold**
- **Ldspkr Pg***
- **Fax**
  - Extension*
  - Msg Waiting*
  - Threshold
- **MaintAlarms**
- **VMS/AA**
  - TransferRtn
  - TT Duration
  - TT Interval

NightSrvce

- **Group Assign†**
  - Extensions*
  - Calling Grp
- **OutRestrict**
- **Emergency**
- **ExcludeList***
- **Start***
- **Stop***
- **Time Control**
  - *On*
  - *Off*

Labeling

- **Directory**
  - System
  - Extension
  - Personal
- **LinesTrunks**
- **PostMessage**
- **Grp Calling**

Data

- **Voice/Data***
- **2B Data**

Print

- **All**
- **SysSet-up**
- **Dial Plan**
- **Labels**
- **Trunk Info**
  - TIE
  - DID
  - Loop/Ground
  - General
- **T1 Info**
- **PRI Info**
- **RmoteAccess**
- **Oper Info**
- **AllowList**
- **AllowListTo**
- **DisallowLst**
- **DisallowTo**
- **ARS**
- **Ext Direct**
- **Sys Direct**
- **Group Page**
- **Ext Info**
- **GrpCoverage**
- **Grp Calling**
- **Night Service**
- **Call Pickup**
- **Error Log**
- **Auth Code**
- **BRI**
- **Switch 56**

Cntr-Prg

- **Program Ext**
- **Copy Ext**

Language

- **SystemLang**
  - English
  - French
  - Spanish
- **Extensions**
  - Single
    - *English*
    - *French*
    - *Spanish*
  - Block
    - *English*
    - *French*
    - *Spanish*
- **SMDR**
  - English
  - French
  - Spanish
- **Printer**
  - English
  - French
  - Spanish

Lines Trunks Continued

- **RemoteAccss**
  - LinesTrunks*
    - *Dedicated*
    - *Shared*
    - *No Remote*
  - Non-TIE
    - *BarrierCode*
      - *Barrier Code Required*
      - *BarrierCode Not Required*
    - *Restriction*
      - *Unrestricted*
      - *Outward Restrict*
      - *Toll Restrict*
    - *ARS Restrct*
    - *Allow List**
    - *DisallowLst**
  - TIE Lines
    - *BarrierCode*
      - *Barrier Code Required*
      - *BarrierCode Not Required*
    - *Restriction*
      - *Unrestricted*
      - *Outward Restrict*
      - *Toll Restrict*
    - *ARS Restrct*
    - *Allow List**
    - *DisallowLst**
  - AutoQueuing
    - *Enable*
    - *Disable*

Lines Trunks Continued

- **Pools†**
- **Toll Type†**
- **HoldDiscnct†**
- **PrincipalUsr**
- **QCC Prior†**
- **QCC Oper†**
- **LS-ID Delay**
- **ClockSync**
  - Primary
    - *Loop*
    - *Local*
  - Secondary
    - *Loop*
    - *Local*
  - Tertiary
    - *Loop*
    - *Local*
- **BRI**
  - SPID/DN
  - Timers
    - *T200 Timer*
    - *T203 Timer*
    - *T303 Timer*
    - *T305 Timer*
    - *T308 Timer*
- **T1 Data NW**

* *The Inspect feature can be used with this menu option. Press Inspect or PgDn.*

† *The Inspect feature can be used in entry mode with this menu option. Press Inspect or PgDn while in entry mode.*

LED Displays

C

LED Status

Table C–1 indicates LED status on the MLX-20L console. LED status is indicated on the LEDs next to the 20 buttons below the display area on the system programming console. LED status is simulated on the computer screen when you use SPM.

Table C–2 indicates LED status on the DSS console. LED status is indicated on the red LED next to the 50 extension buttons.

Table C–0. Line or Trunk Feature Status

System Programming Menu Option	Option	LED Status*					
		Green LED			Red LED		
		ON	OFF	FLASHING	ON	OFF	FLASHING
Lines Trunks	Tie Lines						
	Inmode	Incoming tie line is touch-tone	Incoming tie line is rotary dial†				
	Outmode	Outgoing tie line is touch-tone	Outgoing tie line is rotary dial†				
	Dialtone	Remote dial tone†	Local dial tone				
Lines Trunks	TT/LS Disc						
	Outmode	Line/Trunk is touch-tone†	Line/trunk is rotary dial				
Lines Trunks	Pools				Trunk is in pool	Trunk is not in pool	
Lines Trunks	Toll Type	Must dial 1 + area code†	1 + dialing is not needed				
Lines Trunks	Hold Disconct	Long-450 ms†	Short- 50 ms				
Lines Trunks	LS-ID Delay	LS-ID Delay is on	LS-ID Delay is off†				
Extensions	Lines Trunks	Line/trunk or pool is assigned to button	Line/trunk or pool is not assigned to button		Trunk is assigned to a pool		

* LED Status is indicated on LEDs next to the 20 buttons below the display area of the system programming console or simulated on the computer screen when using SPM.

† This is the factory setting.

Table C–2. Telephone Feature Status for DSS Console Only

System Programming Menu Option	Option	Red LED Status		
		ON	OFF	FLASHING
Extensions	Account (FACE)	Forced Account Code Entry assigned	Forced Account Code Entry not assigned†	
Extensions	BIS/HFAI	Telephone has BIS/HFAI capability (factory setting for analog multiline telephones)	Other	
Extensions	Call Pickup	Telephone is assigned to Call Pickup Group	Telephone is not assigned to Call Pickup Group†	
Extensions	VoiceSignl	Voice Announce to Busy assigned	Voice Announce to Busy not assigned†	
Extensions	Ext Status	Extension Status assigned	Extension Status not assigned	Extension Status can be assigned
Extensions	Group Page	Telephone is in group	Telephone is not in group†	
Extensions	Group Cover	Telephone is in coverage group	Telephone is not in coverage group†	
Extensions	Group Calling Members	Telephone is assigned to group	Telephone is not assigned to group†	
Extensions	Mic Disable	Telephone microphone is disabled	Telephone microphone is enabled	
Extensions	Remote Frwd	Telephone can transfer calls to a remote telephone number	Telephone cannot transfer calls to a remote telephone number†	

† This is the factory setting.

Continued on next page

Table C–2, *Continued*

System Programming Menu Option	Option	Red LED Status		
		ON	OFF	FLASHING
Night Service	Group Assign	Telephone is in group	Telephone is not in group†	
Night Service	Exclude List	Telephone is excluded	Telephone is not excluded†	
Aux Equip	Msg Waiting	Station is a fax message-waiting station	Station is not a fax message-waiting station	
Aux Equip	Fax Extension	Extension is a fax machine	Extension is not a fax machine	
Tables	AllowTo	Allowed List assigned to telephone	Allowed List is not assigned to telephone†	
Tables	DisallowTo	Disallowed list assigned to telephone	Disallowed list is not assigned to telephone†	
Data	Voice/Data	Voice/Data pair	Not Voice/Data pair†	
Operator	Direct Trunk Queued Call	Operator position	Other	Can be assigned as operator position
Operator	Queued Call Message Center	Message Center position	Other	Can be assigned as Message Center
Operator	In Queue Alert	Position receives In-Queue Alert	Other	Position can receive In-Queue Alert
Operator	Call Types-Dial 0, LDN Unassigned DID, Grp Coverage	Position receives call type	Other	Position can receive call type

† This is the factory setting.

General Feature Use and Telephone Programming

D

This appendix contains information on the general use of features for the MLX, analog multiline, and single-line telephones. It covers telephone and operator features and the acceptable programming codes for each. It also describes how to program these features on MLX and analog multiline telephones.

General Feature Use Information D–2
Feature Table D–4
Telephone Programming D–9

General Feature Use Information

The following provides general instructions for feature use on MLX, analog multiline, and single-line telephones. Features can be used in the following ways:

- By pressing a dedicated Feature button
- By pressing a programmed button
- By dialing a feature code
- By selecting the feature from the display (MLX display telephones only)

Dedicated Feature Buttons

All multiline telephones have a group of dedicated feature buttons that are programmed and labeled at the factory. The functions of these buttons, which include **Conference**, **Transfer**, and **Speaker**, cannot be changed. Press the button for the feature you want to use.

Programmed Buttons

Any unlabeled line button on multiline telephones can be programmed with a feature for one-touch activation. See Tables D–1 through D–4 for more information on programming features onto line buttons.

Some features, such as Auto Dial, must be programmed onto line buttons in order to use them. Other features, such as Privacy, are best used if programmed onto line buttons—the LED next to the line button provides visual indication that the feature is in use. The following features must be programmed onto line buttons:

- Auto Answer All
- Auto Answer Headset
- Auto Dial
- Barge-In
- Coverage
  - Group Coverage
  - Primary Coverage
  - Secondary Coverage
  - Coverage Off
- Do Not Disturb
- Extension Status—Agent Login/Logout
- Feature Button (analog multiline telephones only)
- Headset/Handset Mute
- Headset Status
- Headset Hang Up
- Notify
- Posted Message (available from display on MLX display telephones)
- Saved Number Dial
- Signaling

Feature Codes

Feature codes are 1-, 2-, and 3-digit codes that activate features. A feature code is used by first pressing the dedicated **Feature** button on MLX telephones; pressing a programmed **Feature** button on analog multiline telephones; dialing **#** on single-line telephones. Each of these methods sends a signal to the system that a feature code is about to be dialed. When the code is dialed, the feature is activated.

NOTE:
Queued Call Console (QCC) system operators cannot use feature codes.

The following features can be used only by dialing feature codes:

- Call Pickup
- Forward/Follow Me—Cancel One
- Forward/Follow Me—Cancel All
- Message Cancel
- Personal Speed Dial
- System Speed Dial

NOTE:
Pressing the **Conference**, **Transfer**, **Speaker**, or **Feature** button while activating a feature cancels the process. Pressing any other button, such as the **Mute**, **HFAI**, **Message Status**, **DSS Page**, **More**, **Message**, **Clock**, analog multiline display keys, or analog multiline disconnect button does not cancel the feature activating process.

Feature Table

Table D–1 lists the telephone and operator features that can be assigned to telephones or consoles through Centralized Telephone Programming or by users from their telephones.

Table D–1. Telephone and Operator Features

Feature	Prog. Code	Display Label	Single-Line	Analog Multi-line	MLX-10	MLX-10D	MLX-28D	MLX-20L
Account Code Entry	*82	Account Code	KP	KPB	KPB	KPB	KPB	KPB
Alarm†	*759	Alarm		KPB			KPB	KPB
Authorization Code	*80	Auth Code	KP	KPB	KPB	KPB	KPB	KPB
Auto Answer All	*754	AutoAns All		KPB				
Auto Answer Intercom	*753	AutoAnsIcom		KPB				
Auto Dial		Auto Dial		KPB	KPB	KPB	KPB	KPB
Inside	*22 + ext no.	Inside						
Outside	*21 + tel. no.	Outside						
Automatic Line Selection		AutoLineSel		KPB	KPB	KPB	KPB	KPB
On	*14							
Off	**14							
Barge-In†‡	*58	Barge In		KPB	KPB	KPB	KPB	KPB
Callback			KP	KPB	KPB	KPB	KPB	KPB
Automatic		Cback Auto						
On	*12	On						
Off	**12	Off						
Selective	*55	Cback Sel						
Call Waiting		CallWaiting	KPB	KPB	KPB	KPB	KPB	KPB
On	*11	On						
Off	**11	Off						
Camp-On	*57	Camp On		KPB	KPB	KPB	KPB	KPB
Conference	*772	Conference		B	B	B	B	B
Coverage		Coverage		KPB	KPB	KPB	KPB	KPB
Receiver buttons								
Group	*42 + ext. no.	Group						
Primary	*40 + ext. no.	Primary						
Secondary	*41 + ext. no.	Secondary						
Sender buttons								
Cover inside & outside calls	*48	CoverInside, On	KPB					
Cover outside calls only	**48	CoverInside, Off	KPB					
Coverage off	*49	CoverageOff	KPB					
VMS off	*46		KPB					
Data Status	*83 + ext. no.			KPB	KPB	KPB	KPB	KPB

† Operator console
‡ Centralized Telephone Programming only

K Key mode
P PBX mode
B Behind Switch mode

Continued on next page

Table D–1, *Continued*

Feature	Prog. Code	Display Label	Single-Line	Analog Multi-line	MLX-10	MLX-10D	MLX-28D	MLX-20L
Directory								
System Directory (system programming)						KPB	KPB	KPB
Extension Directory (display only)						KPB	KPB	KPB
Personal Directory (display only)								KPB
Direct Voice Mail	*56	Direct VoiceMail	KP	KP	KP	KP	KP	KP
Do Not Disturb	*47	DoNotDistrb		KPB	KPB	KPB	KPB	KPB
Drop	*773	Drop		B	B	B	B	B
Extension Status				KPB			KPB	KPB
Direct Line Console								
Status Off	*760	OperatorES, ESOff						
Status 1	*761	OperatorES, ES1						
Status 2	*762	OperatorES, ES2						
Telephones (rooms or agents)			KPB	KPB	KPB	KPB	KPB	KPB
Status 1	*45	ES Status, ES1						
Status 2	*44	ES Status, ES2						
Feature button	*20	Feature Btn		KPB				
Forward	*33	Forward	KPB	KPB	KPB	KPB	KPB	KPB
Forward (Inside)								
Remote Call Forward (Outside)								
Group Calling	*22 + *calling group ext no.*	Group Call		KPB	KPB	KPB	KPB	KPB
In-Queue Alarm button								
Calling group supervisor				KPB			KPB	KPB
Available (ES Status 2)	*762	OperatorES, ES2						
Unavailable (ES Status Off)	*760	OperatorES, ES Off						
Calling group members			KPB	KPB	KPB	KPB	KPB	KPB
Sign (Available)	*44	ES Status, ES2						
After-call work state (CMS only)	*45	ES Status, ES1						

† Operator console

K Key mode
P PBX mode
B Behind Switch mode

Continued on next page

Table D–1, *Continued*

Feature	Prog. Code	Display Label	Single-Line	Analog Multi-line	MLX-10	MLX-10D	MLX-28D	MLX-20L
Group Page Auto Dial button	*22 + *paging group ext. no.*	Group Page		KPB	KPB	KPB	KPB	KPB
Headset		Hdset			KP	KB	KB	KB
Auto Answer	*780	Auto Answer						
Hang Up‡	*781	Hang Up						
Mute (Headset/Handset)	*783	Mute						
Status	*782	Status						
Intercom buttons				KB	KB	KB	KB	KB
Assign buttons‡ (factory-set type is Ring)								
Intercom	*16	SysAccess	KB					
Originate Only	*18	SysAcc-□□	KB					
Change type of Intercom button								
Ring	**19	Voice Annce, Place Ring						
Voice	*19	Voice Annce, Place Voice						
Last Number Dial	*84	LastnumDial	KP	KPB	KPB	KPB	KPB	KPB
Messaging								
Leave Message	*25	Leave Msg	KPB	KPB	KPB	KPB	KPB	KPB
Message LED off	*54			KPB	KPB	KPB	KPB	KPB
Posted Message	*751	Posted Msg		KPB	KPB	KPB	KPB	KPB
Send/Remove† Message	*38	Send/RmvMsg		KPB			KPB	KPB
Receiving messages:		Messages						
Delete Message*	*26	Delete Msg		KPB		KPB	KPB	KPB
Next Message*	*28	Next Msg		KPB		KPB	KPB	KPB
Return Cal*	*27	Return Call		KPB		KPB	KPB	KPB
Scroll*	*29			KPB				
Night Service†	*39	Night srvc		KPB			KPB	KPB
Notify		Notify		KPB	KPB	KPB	KPB	KPB
Send	*757 + *ext. no*	Send						
Receive	*758 + *ext. no*	Receive						
Park	*86	Park	KP	KPB	KPB	KPB	KPB	KPB
Park Zone Auto Dial†	*22 + *park zone*	Park Zone		KPB			KPB	KPB
Personal Speed Dial	#+ 01–24 + *21 + *tel. no.* + #		KP	KPB	KPB	KPB		
Personalized Ringing	*32 + *ring* (1–8)	PersonalRng, Pattern #1... Pattern #8		KPB	KPB	KPB	KPB	KPB

† Operator console
‡ Centralized Telephone Programming only
Display telephones only.
* Programmming codes are used with analog multiline telephones only; MLX telephones use display.

K	Key mode
P	PBX mode
B	Behind Switch mode

Continued on next page

Table D–1, *Continued*

Feature	Prog Code	Display Label	Single-Line	Analog Multi-line	MLX-10	MLX-10D	MLX-28D	MLX-20L
Pickup		Pickup	KP	KPB	KPB	KPB	KPB	KPB
General use	*9	General						
Specific extension	*9 + *ext no.*	Extension						
Specific line	*9 + *line no.*	Line						
Group	*88	Group						
Privacy	*31	Privacy	KP	KPB	KPB	KPB	KPB	KPB
Recall	*775	Recall		KPB	KPB	KPB	KPB	KPB
Reminder Service		Reminder	KPB	KPB	KPB	KPB	KPB	KPB
Set	*81	Set						
Cancel	**81	Cancel						
Missed†	*752	Missed						
Ringing/Idle Line Preference	*343	Line Prefer, On		KPB	KPB	KPB	KPB	KPB
Cancel	*344	Line Prefer, Off						
Ringing Options		Ring Options						
Individual Lines		One Line		KPB	KPB	KPB	KPB	KPB
Immediate Ring	*37	Immed Ring						
Delay Ring	*36	Delay Ring						
No Ring	*35	No Ring						
All Lines		All Lines						
Immediate Ring	*347	Immed Ring						
Delay Ring	*346	Delay Ring						
No Ring	*345	No Ring						
Abbreviated Ring		Abbreviated						
On	*341	On						
Off	*342	Off						
Send Ring (Shared SA)		SharedSARng	P	P	P	P	P	P
On	*15	On						
Off	**15	Off						
Saved Number Dial	*85	SaveNumDial		KPB	KPB	KPB	KPB	KPB
Send/Remove Message†	*38	Send/RmvMsg		KPB			KPB	KPB
Signaling (manual)	*23 + *ext. no.*	Signal		KPB	KPB	KPB	KPB	KPB

† Operator console

K Key mode
P PBX mode
B Behind Switch mode

Continued on next page

Table D–1, *Continued*

Feature	Prog. Code	Display Label	Single-Line	Analog Multi-line	MLX-10	MLX-10D	MLX-28D	MLX-20L
System Access buttons				P	P	P	P	P
Assign buttons‡								
System Access	*16	SysAccess	P					
Originate Only	*18	SysAcc-□□	P					
Shared System Access	*17 + *primary ext. no.*	ShareSysAcc	P					
Change type of System Access button								
Ring	**17	Voice Annce, Place, Ring						
Voice	*17	Voice Annce, Place, Voice						
System Speed Dial	*24 + *code (600–729)*	SysSpeedDl	KP	KPB	KPB	KPB	KPB	KPB
Transfer	*774	Transfer		B	B	B	B	B
Voice Announce		Voice Annce Receive		KPB	KPB	KPB	KPB	KPB
On	*10	On						
Off	**10	Off						

‡ Centralized Telephone Programming only

K Key mode
P PBX mode
B Behind Switch mode

Telephone Programming

The following describes how to program features on MLX and analog multiline telephones. Since Personal Speed Dial is the only feature that single-line telephone users can program, general programming instructions for single-line telephones are not provided.

NOTE:
Features cannot be programmed on QCCs in system operator positions. Features assigned to these consoles are fixed and cannot be changed.

Programming Methods

Telephones can be programmed by dialing programming codes or on MLX display phones by selecting features from the display. An analog multiline telephone cannot be programmed by selecting features from the display.

To program a telephone, first enter programming mode:

- On analog multiline telephones, slide the Test/Program (T/P) switch on the side of the telephone to **P**.
- On MLX-10 telephones, press the **Feature** button and dial *00*.
- On MLX display telephones, use the same procedures as the MLX-10 or enter programming mode by selecting `Ext Program` from the menu screen on the display.

See the appropriate user or operator guide for more information.

NOTE:
Features can also be programmed onto individual telephones through Centralized Telephone Programming. The steps for using programming codes vary depending on the telephone. Tables D–2 through D–4 list the basic steps for programming each telephone type.

Table D–2. Programming Analog Multiline Telephones

Step		Action
1	Label the button. **Note:** Skip this step if the feature will not be programmed onto a button.	■ Remove the clear label cover from the telephone by inserting the end of a paper clip in the notch at the top of the cover. ■ Write the feature name on the card next to the button to be programmed. ■ Replace the cover.
2	Begin programming.	■ Slide the T/P switch on the side of the telephone to **P**.
3	Select the feature.	■ Press the button you labeled. *If you have a display, it shows the name of the feature currently programmed on the button. If no feature is programmed, the display indicates that the button is blank.* **Note**: if the feature does not get programmed onto a button, press any line button. This does not affect the button in any way. Dial the programming code. *The feature is programmed.*
4	End programming.	■ Slide the T/P switch to the center position.

Table D–3. Programming MLX 10 Telephones

Step		Action
1	Label the button. **Note:** Skip this step if the feature will not be programmed onto a button.	■ Remove the clear label cover from the telephone by pulling up on the tab that extends from the top of the cover. ■ Write the feature name on the card next to the button to be programmed. ■ Replace the cover.
2	Begin programming.	■ Press the **Feature** button and then dial *00*.
3	Select the feature.	■ Press the button you labeled. **Note:** If the feature does not get programmed onto a button, press any line button. This does not affect the button in any way. ■ Dial the programming code. *The feature is programmed.*
4	End programming.	■ Press the **Feature** button and dial **00*.

Table D–4. Programming MLX Display Telephones Using the Display

Step		Action
1	Label the button to be programmed. **Note:** Skip this step if the feature will not be programmed onto a button.	■ Remove the clear label cover from the telephone by pulling up on the tab that extends from the top of the cover. ■ Write the feature name on the card next to the button to be programmed. ■ Replace the cover.
2	Begin programming.	■ Press **Menu**. ■ Select `Ext` Program from the display. ■ Select `Start` from the display.
3	Identify the button to be programmed.	■ Press the button you labeled. **Note:** If the feature does not get programmed onto a button, press any line button. This does not affect the button in any way. *The display identifies the feature currently programmed on the button. If no feature is programmed, the display indicates that the button is blank.*
	To delete the feature currently programmed on the button:	■ Select `Delete` from the display. *The button is now blank.* ■ Press the button you labeled again to continue programming. **Note:** If the currently programmed feature was not deleted from the button, the new feature programmed onto it will replace it.

Continued on next page

Table D–4, *Continued*

Step		Action
	To continue programming:	■ Select `List Feature` from the display. *The screen lists feature names in alphabetical order.*
4	Select the feature.	.
	If the feature name is on the display:	■ Press the button next to or below the name of the feature to be programmed.
	If the feature name is not on the display:	
	To move through the list of features page by page,	■ Press **More.**
	or	
	To jump to the screen that displays the feature name.	■ Select `Find Feature` from the display. ■ Select the range of letters from the display that corresponds to the first letter of the feature name (for example, if the feature begins with A, select `ABC`). ■ If the feature is not displayed on the page that you jumped to, press **More.** ■ When you find the feature you want, press the button next to or below it.
5	Respond to any additional prompts on the display.	■ Select appropriate prompt (for example, select `on` or `off` to turn Inside Coverage on or off), and/or enter required information (for example, dial a phone number for Auto Dial). ■ Select `Enter`.

Continued on next page

Table D–4, *Continued*

Step		Action
6	End programming.	
	To return to the Home screen:	■ Press **Home** or lift and replace the handset.
	To return to the Menu screen:	■ Press **Menu.**

NOTE:
MLX display telephones can also be programmed using the method described for MLX-10 telephones. For example, the programming mode can be entered by pressing the **Feature** button and dialing *00*, then referring to the display to continue the programming process. Or, enter programming through the display and then dial a programming code to select the feature rather than selecting it from the display.

Button Diagrams

E

This appendix contains the button diagrams for Hybrid/PBX systems as well as button diagrams for Key and Behind Switch systems.

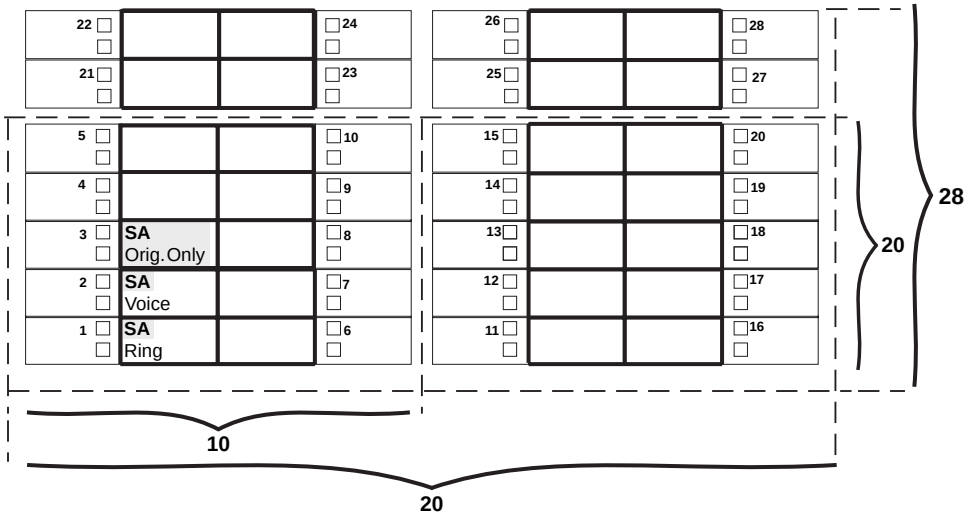

Figure E–1. MLX Telephone Button Diagram (Hybrid/PBX Mode)

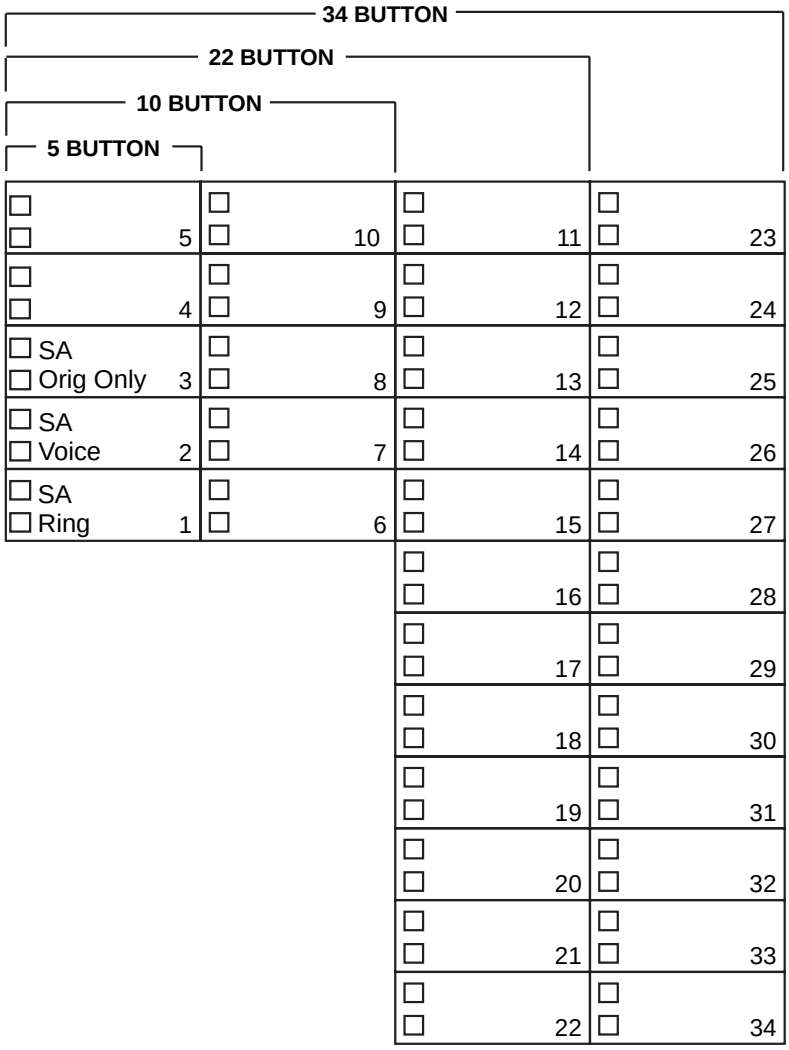

Figure E–2. Analog Multiline Telephone Button Diagram (Hybrid/PBX Mode)

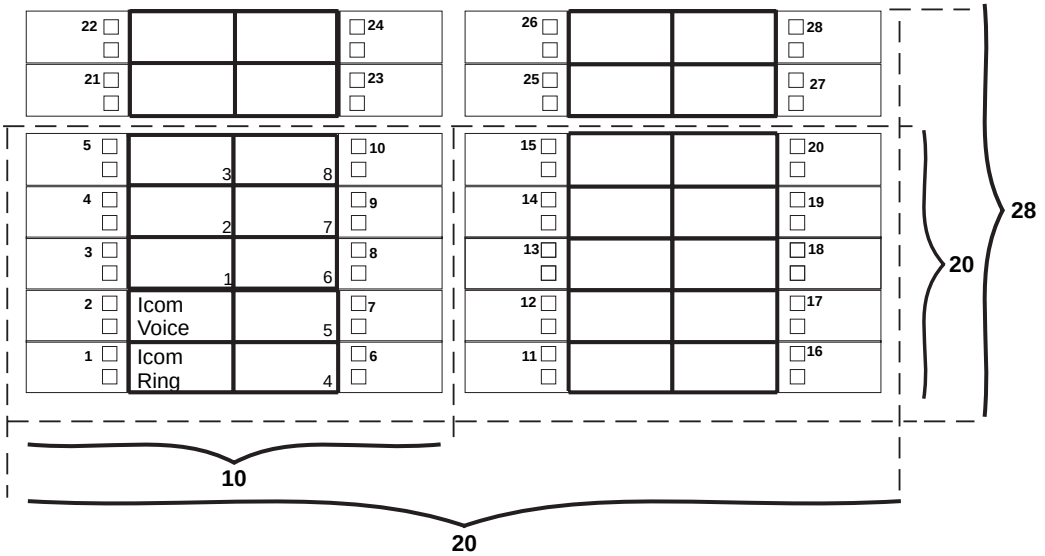

Key Mode:
Up to 8 personal line buttons are assigned beginning at button 3.

Behind Switch Mode:
One prime line button is assigned to button 3.

Figure E–3. MLX Telephone Button Diagram (Key and Behind Switch Mode)

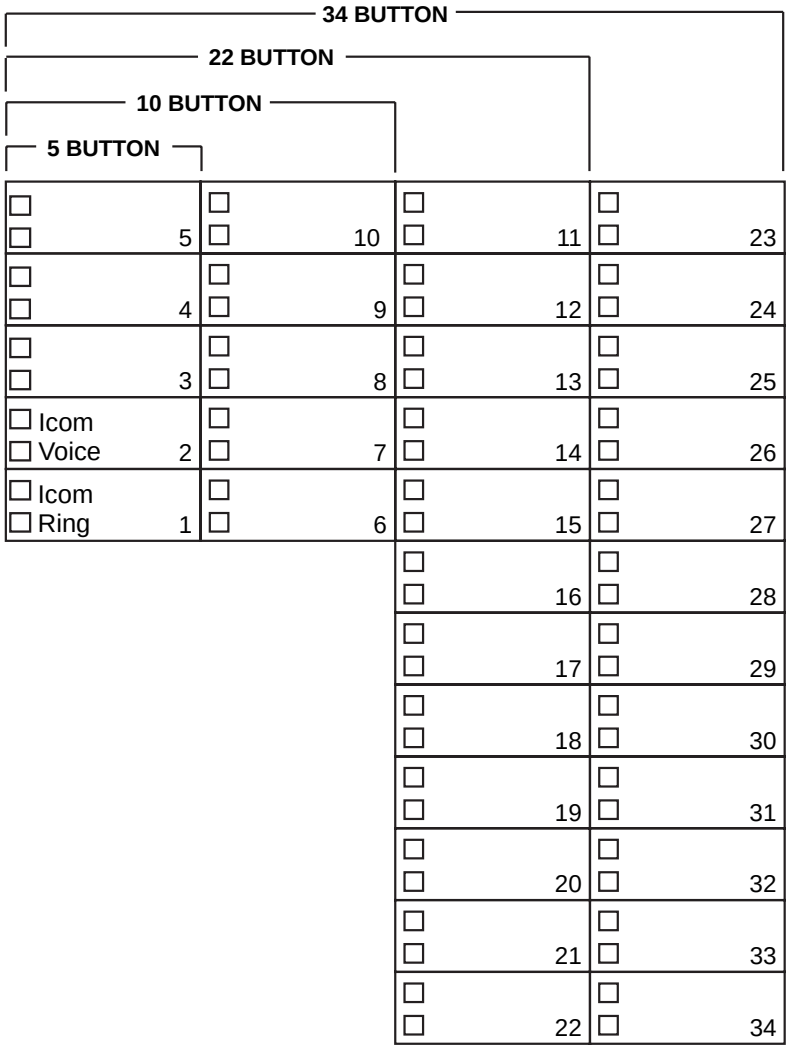

Key Mode:
Up to 8 Personal line buttons are assigned beginning at button 3.

Behind Switch Mode:
One prime line button is assigned to button 3.

Figure E–4. Analog Multiline Telephone Button Diagram (Key and Behind Switch Mode)

Sample Reports

F

This appendix includes samples of the print reports generated by the communications system. Table F–1 lists the system reports and the pages in this appendix where samples can be found.

Table F–1. Report Contents

For...	See...
System Information Report	F–6
Dial Plan Report	F–8
Label Information Report	F–11
Tie Trunk Information Report	F–12
DID Trunk Information Report	F–13
GS/LS Trunk Information Report	F–14
General Trunk Information Report	F–15
DS1 Information Report	F–16
PRI Information Report	F–17
Remote Access (DISA) Information Report	F–19
Operator Information Report	F–20
Allowed Lists Report	F–22
Access to Allowed Lists Report	F–23
Disallowed Lists Report	F–24
Access to Disallowed Lists Report	F–25
Automatic Route Selection Report	F–26
Extension Directory Report	F–28
System Directory Report	F–29
Group Paging Report	F–30

Continued on next page

Table F–1, *Continued*

Extension Information Report	F–31
Group Coverage information Report	F–33
Direct Group Calling Information Report	F–34
Night Service Information Report	F–35
Group Call Pickup Report	F–36
Error Log Report	F–37
Authorization Code Information Report	F–38
BRI Information Report	F–39
Switch 56 Data Information Report	F–40

Table F–2 lists all of the system reports and includes: the print menu option used to print each report; the report name; and a brief description of each report.

The menu options referred to in Table F–2 are accessed by selecting the `Print` option on the System Programming menu. Refer to the “Print Reports” section of this guide for details on the `Print` option.

Table F–2. System Reports

Menu Option	Report Name	Description
`All`		Prints each of the reports available on the Print menu, from SysSet-up to Error Log. Note: When `All` is selected, the four Trunk Information reports automatically print. See `Trunk Info`.
`SysSet-up`	System Information	Systemwide information such as return intervals, system mode, system programming port, slot assignments, etc.
`Dial Plan`	Dial Plan	Extensions assigned to pools, paging zones, calling groups, lines or trunks, and stations; labels for lines/trunks and stations.
`Labels`	Label Information	Labels assigned to stations Posted Messages, and names and telephone numbers included in MLX-20L user's Personal Directory.

Continued on next page

Table F–2, *Continued*

Menu Option	Report Name	Description
Trunk Info		Select to display four trunk options: Tie, DID, Loop/Ground, General.
TIE	TIE Trunk Information	Extensions assigned to and signaling attributes associated with Tie trunks.
DID	DID Trunk Information	Extensions assigned to and signaling attributes associated with DID trunks.
Loop/ Ground	GS/LS Trunk Information	Extensions assigned to and signaling attributes associated with ground- and loop-start trunks.
General	General Trunk Information	All identified extensions and feature-related attributes of each extension.
T1 Info	DS1 information	Options (line, signal, etc.) assigned to T1 trunks or lines.
PRI Info	PRI Information	PRI trunks/lines assigned to B-channel groups.
Rmote Access	Remote Access (DISA) Information	Remote access dial code, class of restriction, barrier code information.
Oper Info	Operator Information	For each system operator position; the logical ID, extension number, label, type (DLC or QCC); all general system operator options, such as backup position, etc.; call types and priorities.
AllowList	Allowed Lists	Telephone numbers included in Allowed Lists. Lists are numbered 0–7, and entries are numbered 0–9.
AllowListTo	Access to Allowed Lists	Lists are numbered 0–7. If the Allowed List is assigned to Remote Access users and barrier codes are used, the barrier codes are numbered 0–16. If no barrier codes are used, 17 means the Allowed List is assigned to tie-trunk users, and 18 means the Allowed list is assigned to non-tie-trunk users.

Continued on next page

Table F–2, *Continued*

Menu Option	Report Name	Description
DisallowLst	Disallowed Lists	Telephone numbers included in Disallowed Lists. Lists are numbered 0–7, and entries are numbered 0–9.
DisallowTo	Access to Disallowed Lists	Telephones to which Disallowed Lists are assigned. Lists are numbered 0–7. If the Disallowed List is assigned to Remote Access users and barrier codes are used, the barrier codes are numbered 0–16. If no barrier codes are used, 17 means the Disallowed List is assigned to tie-trunk users, and 18 means the Disallowed List is assigned to non-tie-trunk users.
ARS	Automatic Route Selection	Access code; table types with area codes and exchanges; routes for sub-patterns A and B, FRL, absorb digit, delete digit, Dial 0, and N11 tables.
Ext Direct	Extension Directory	Slot/port addresses, extensions, labels and feature-related attributes. Column headings are printed on the first page only and are not carried over to subsequent pages. Column headings 4 through 10 (and 14 through 20) should be read vertically. That is: FACE (Forced Account Code Entry); HBIS (HFAI/BIS); RCFW (Remote Call Forward); MICD (Microphone Disable); SIG (Voice Signal); RSTR (Calling Restrictions); ARSR (ARS Restriction Level); 2BDT (2B Data Capability).
Sys Direct	System Directory	System Speed Dial number, label and telephone number in System Directory, and whether number should display.

Continued on next page

Table F–2, *Continued*

Menu Option	Report Name	Description
Group Page	Group Paging	Extension number for each group and the extension number of each telephone assigned to the group.
Ext Info	Extension Information	For each specified extension, type of equipment connected, features assigned to station, and features assigned to each button on the station.
GrpCoverage	Group Coverage Information	Extension number for each group and the extension number for each telephone assigned to the group. Information is printed only for calling groups with members and/or lines/trunks assigned.
GrpCalling	Direct Group Calling Information	Group calling options (hunt, type, message waiting, station, etc.), the extension number for each telephone assigned to the group, and the lines or trunks assigned to the group.
Night Service	Night Service Information	The operator, password required, time-of-day, and Emergency Allowed List extension numbers.
Call Pickup	Group Call Pickup	Extension numbers for telephones assigned to each group. Pickup groups are numbered 1–30.
Error Log	Error Log	Error message and code, time and day error occurred, frequency of error. See the Maintenance and Troubleshooting guide.
Auth Code	Authorization Code Information	Authorization Code and permissions for extensions to which authorization codes are assigned.
BRI	BRI Information Report	Service Profile ID and Directory Number for each BRI line, flexible timers and fixed timers and counters.
Switch 56	Switch 56 Data Information Report	Dial Plan Routing information and programmable options.

System Reports

System Information Report

Print Menu Option: `SysSet-up`

```
SYSTEM INFORMATION
Current Date:    01/04/00
Current Time:    00:21:15

System :   Mode           AutoMaintBusy   AutoBusyTie
       :   Hybrid/PBX     Disable         Disable

Language:    SystemLang         SMDR            Printer
             English               English         English

Direct Line Operators           :    14   18   22   42
Queued Call Operators           :    10
SysProg Port                    :    10       Password :        craft

Transfer : Type      Audible       OneTouch(Complete)   ReturnTimer
         : Ring      MusicOnHold    Transfer(Auto)      5 rings

VMS Transfer Return Interval    : 4
Paging System Lines             :
Music On Hold Line              : 804
Camp On Time                    : 90 sec
Call Park Return Time           : 180 sec
Delay Rings                     : 2
Coverage Delay                  : 3
Auto Callback Rings             : 3
Extension Status (ESS)          : Group Call / CMS
ESS Operators                   :

SMDR :   Min.CallTime        CallReport                  Format
    :   40 sec              In/Out             Basic

Intercom Dial Tone              :  Inside
Reminder Service Cancel         :    :
Behind Switch Code              :  Drop    Transfer   Conference
Inter-digit Timer (seconds)     :   24  24  24  10  10  10  10   5   5
Recall Timer                    :  450 msec
Second Dial-tone Timer          :  200 msec
Rotary Line Cut Through         :  Delay
Unassigned Extension            :  10
Automatic Backup                :  Weekly - 04:30 Sunday

TI/PRI/BRI Clock Synchronization:
Primary             Secondary         Tertiary
02/01 Loop          04/01 Local       04/02 Local
```

System Information Report—*Continued*

```
Slot # 1:         008 MLX
Slot # 2:         408
Slot # 3:         008
Slot # 4:         408
Slot # 5:         800 GS/LS
Slot # 6:         008 GS/LS-MLX
Slot # 7:         800 CO-BRI
Slot # 8:         008
Slot # 9:         016 (Ringing Frequency - 25 Hz.)
Slot #10:         408 GS/LS
Slot #11:         008
Slot #12:         800
Slot #13:         800 DID
Slot #14:         400 EM
Slot #15:         012
Slot #16:         008 MLX
Slot #17:         408                   * Not Present *
```

Dial Plan Report

Print Menu Option: `Dial Plan`
Sections: Pools; Telephone Paging Zones; Direct Group Calling Group; Lines/Trunks; Stations

```
DIAL PLAN FOR POOLS

POOL.#  1:    70
POOL.#  2:   890
POOL.#  3:   891
POOL.#  4:   892
POOL.#  5:   893
POOL.#  6:   894
POOL.#  4:   895
POOL.#  8:   896
POOL.#  9:   897
POOL.# 10:   898
POOL.# 11:   899

DIAL PLAN FOR TELEPHONE PAGING ZONES

TPZ #  1:     793
TPZ #  2:     794
TPZ #  3:     795
TPZ #  4:     796
TPZ #  5:     797
TPZ #  6:     798
TPZ #  7:     799

DIAL PLAN FOR DIRECT GROUP CALLING GROUP

DGCG  #  1:   770
DGCG  #  2:   771
DGCG  #  3:   772
DGCG  #  4:   773
DGCG  #  5:   774
.
.
.
DGCG  # 32:  7929
```

Dial Plan Report—*Continued*

```
DIAL PLAN FOR LINES/TRUNKS

LINE #  1:    801        OUTSIDE          LINE #    2:   802      OUTSIDE
LINE #  3:    803        OUTSIDE          LINE #    4:   804      OUTSIDE
LINE #  5:    805        OUTSIDE          LINE #    6:   806      OUTSIDE
LINE #  7:    807        OUTSIDE          LINE #    8:   808      OUTSIDE
LINE #  9:    809        OUTSIDE          LINE #   10:   810      OUTSIDE

.                                         .
.                                         .
.                                         .
LINE # 75:    875        OUTSIDE          LINE #   76:   876      OUTSIDE

DIAL PLAN FOR STATIONS

STN #:  1     10         OPERATR          STN  #:   2     710
STN #:  3     11                          STN  #:   4     711
STN #:  5     12                          STN  #:   6     712
STN #:  7     13         EXT 13           STN  #:   8     713
STN #:  9     14         EXT 14           STN  #:  10     714
STN #: 11     15                          STN  #:  12     715
STN #: 13     16                          STN  #:  14     716
STN #: 15     17                          STN  #:  16     717
STN #: 17     18         EXT 18           STN  #:  18      19
STN #: 19     20                          STN  #:  20      21
STN #: 21     22         OPERATR          STN  #:  22      23
STN #: 23     24                          STN  #:  24      25
STN #: 25     26                          STN  #:  26      21
STN #: 27     28                          STN  #:  28      29
STN #: 29     30         AUDIXVP          STN  #:  30      31         AUDIXVP
STN #: 31     32         AUDIXVP          STN  #:  32      33         AUDIXVP
STN #: 33     34                          STN  #:  34      35
STN #: 35     36                          STN  #:  36      31
STN #: 37     38                          STN  #:  38      39
STN #: 39     40                          STN  #:  40      41
STN #: 41     42         EXT 42           STN  #:  42     742
.                                         .
.                                         .
.                                         .
STN #:121   7198                          STN  #:122     7398
STN #:123   5555                          STN  #:124     7399
```

COMPLETE DIAL PLAN FOR STATIONS AND ADJUNCTS

ID #: 1	4000	7300	ID #: 2	4001	7301
ID #: 3	4002	7302	ID #: 4	4003	7303
ID #: 5	4004	7304	ID #: 6	4005	7305
ID #: 7	4006	7306	ID #: 8	4007	7307
ID #: 9	4008	7308	ID #: 10	4009	7309
ID #: 11	4010	3000	ID #: 12	4011	3001
ID #: 13	4012	3002	ID #: 14	4013	3003
ID #: 15	4014	3004	ID #: 16	4015	3005
ID #: 17	4016	3006	ID #: 18	4017	3007
ID #: 19	4018	3008	ID #: 20	4019	3009
ID #: 21	4020	3010	ID #: 22	4021	3011
ID #: 23	4022	3012	ID #: 24	4023	3013
ID #: 25	4024	3014	ID #: 26	4025	3015
ID #: 27	4026	3016	ID #: 28	4027	3017
ID #: 29	4028	3018	ID #: 30	4029	3019
ID #: 31	4030	3020	ID #: 32	4031	3021
ID #: 33	4032	3022	ID #: 34	4033	3023
ID #: 35	4034	3024	ID #: 36	4035	3025
ID #: 37	4036	3026	ID #: 38	4037	3027
ID #: 39	4038	3028	ID #: 40	4039	3029
ID #: 41	4040	3030	ID #: 42	4041	3031
ID #: 43	4042	3032	ID #: 44	4043	3033
ID #: 45	4044	3034	ID #: 46	4045	3035
ID #: 47	4046	3036	ID #: 48	4047	3037
ID #: 49	4048	3038	ID #: 50	4049	3039
ID #: 51	4050	3040	ID #: 52	4051	7351
ID #: 53	4052	3042	ID #: 54	4053	7353
ID #: 55	4054	7354	ID #: 56	4055	7355
ID #: 57	4056	7356	ID #: 58	4057	7357
ID #: 59	4058	7358	ID #: 60	4059	7359
ID #: 61	7160	7360	ID #: 62	7161	7361
ID #: 63	7162	7362	ID #: 64	7163	7363
ID #: 65	7164	7364	ID #: 66	7165	7365
ID #: 67	7166	7366	ID #: 68	7167	7367
ID #: 69	7168	7368	ID #: 70	7169	7369
.			.		
.			.		
.			.		
ID #:191	5151	7490	ID #:192	5152	7491
ID #:193	5153	7492	ID #:194	5154	7493
ID #:195	5155	7494	ID #:196	5156	7495
ID #:197	5156	7496	ID #:198	5158	7497
ID #:199	5158	7498	ID #:200	5160	7499

Label Information Report

Print Menu Option: `Labels`
Sections: Telephone Personal Directory; Posted Messages and Numbers

```
LABEL INFORMATION

Executive Telephone #   10:  Personal Directory

Name          Number                          Display

Executive Telephone #   14:  Personal Directory

Name          Number                          Display

Executive Telephone #   15:  Personal Directory

Name          Number                         Display
MSG #                 POSTED MESSAGE

   1                    DO NOT DISTURB
   2                    OUT TO LUNCH
   3                    AT HOME
   4                    OUT SICK
   5                    IN A MEETING
   6                    IN CONFERENCE
   7                    WITH A CLIENT
   8                    WITH A CUSTOMER
   9                    AWAY FROM DESK
  10                    OUT ALL DAY
  11                    CUSTM MSG11
  12                    CUSTM MSG12
  13                    CUSTM MSG13
  14                    CUSTM MSG14
  15                    CUSTM MSG15
  16                    CUSTM MSG16
  17                    CUSTM MSG17
  18                    CUSTM MSG18
  19                    CUSTM MSG19
  20                    CUSTM MSG20
```

Tie Trunk Information Report

Print Menu Option: `Trunk Info` and `TIE`

```
TIE TRUNK INFORMATION

TRUNK     849        Slot/Port : 14/ 1       TIE-PBX
Direction: 2 Way     E&M Signal: Type1S      Dialtone  : Remote
InType   : Wink      InMode    : Rotary      AnsSupvr  : 300  ms
OutType  : Wink      OutMode   : Rotary      Disconnect: 300  ms

TRUNK     850        Slot/Port : I4/ 2       TIE-PBX
Direction: 2 Way     E&M Signal: Type1S      Dialtone  : Remote
InType   : Wink      InMode    : Rotary      AnsSupvr  : 300  ms
OutType  : Wink      OutMode   : Rotary      Disconnect: 300  ms

TRUNK     851        Slot/Port : 14/ 3       TIE-PBX
Direction: 2 Way     E&M Signal: Type1S      Dialtone  : Remote
InType   : Wink      InMode    : Rotary      AnsSupvr  : 300  ms
OutType  : Wink      OutMode   : Rotary      Disconnect: 300  ms

TRUNK     852        Slot/Part : 14/ 4       TIE-PBX
Direction: 2 Way     E&M Signal: Type1S      Dialtone  : Remote
InType   : Wink      InMode    : Rotary      AnsSupvr  : 300  ms
OutType  : Wink      OutMode   : Rotary      Disconnect: 300  ms
```

DID Trunk Information Report

Print Menu Option: `Trunk Info` and `DID`

```
DID   TRUNK INFORMATION

Trk SS/PP Blk DiscTime Type ExpDig DelDig AddDig    Signal  InvDest
841 13/ 1  1    500ms  Wink    4      3       1   TouchTone BkupExt
842 13/ 2  1    500ms  Wink    4      3       1   TouchTone BkupExt
843 13/ 3  2    500ms  Wink    3      0              Rotary BkupExt
844 13/ 4  2    500ms  Wink    3      0              Rotary BkupExt
845 13/ 5  1    500ms  Wink    4      3       1   TouchTone BkupExt
846 13/ 6  1    500ms  Wink    4      3       1   TouchTone BkupExt
847 13/ 7  2    500ms  Wink    3      0              Rotary BkupExt
848 13/ 8  1    500ms  Wink    4      3       1   TouchTone BkupExt
```

GS/LS Trunk Information Report

Print Menu Option: `Trunk Info` and `Loop/Ground`

GS/LS TRUNK INFORMATION

Trk	SS/PP	Type	OutMode	RelDisc	ChannelUnit	LS-ID Delay
801	2/ 1	Loop	TouchTone	Yes	N/A	N/A
802	2/ 2	Loop	TouchTone	Yes	N/A	N/A
803	2/ 3	Loop	TouchTone	Yes	N/A	N/A
804	2/ 4	Loop	TouchTone	Yes	N/A	N/A
805	4/ 1	Loop	Rotary	Yes	N/A	N/A
806	4/ 2	Loop	Rotary	Yes	N/A	N/A
807	4/ 3	Loop	Rotary	Yes	N/A	N/A
808	4/ 4	Loop	Rotary	Yes	N/A	N/A
809	5/ 1	Ground	TouchTone	N/A	N/A	N/A
810	5/ 2	Ground	TouchTone	N/A	N/A	N/A
811	5/ 3	Loop	Rotary	Yes	N/A	N/A
812	5/ 4	Loop	Rotary	Yes	N/A	N/A
813	5/ 5	Loop	Rotary	Yes	N/A	N/A
814	5/ 6	Loop	Rotary	Yes	N/A	N/A
815	5/ 7	Loop	TouchTone	Yes	N/A	N/A
816	5/ 8	Loop	Rotary	Yes	N/A	N/A
817	6/ 1	Ground	Rotary	N/A	N/A	N/A
.						
.						
879	15/ 7	LS-ID	Rotary	Yes	N/A	Yes
880	15/ 8	LS-ID	Rotary	Yes	N/A	No

General Trunk Information Report

Print Menu Option: `Trunk Info` and `General`

GENERAL TRUNK INFORMATION

Trk	SS/PP	RemAccess	Pool	TlPrfx	HldDisc	Principal	QCC Prty	QCC Oper
801	2/ 1	No Remote	70	Yes	Long		4	
802	2/ 2	No Remote	70	Yes	Long		4	
803	2/ 3	No Remote	70	Yes	Long		4	
804	2/ 4	No Remote		Yes	Long		4	
805	4/ 1	No Remote		Yes	Long		4	
806	4/ 2	No Remote		Yes	Long		4	
807	4/ 3	No Remote		Yes	Long		4	
808	4/ 4	No Remote		Yes	Long		4	
809	5/ 1	No Remote	890	Yes	Long		4	10
810	5/ 2	No Remote		Yes	Long		4	
811	5/ 3	No Remote		Yes	Long		4	
812	5/ 4	No Remote		Yes	Long		4	
813	5/ 5	No Remote		Yes	Long		4	
814	5/ 6	No Remote		Yes	Long		4	
815	5/ 7	No Remote		Yes	Long		4	
816	5/ 8	No Remote		Yes	Long		4	
817	6/ 1	Dedicated		Yes	Long	42	4	

DS1 Information Report

Print Menu Option: `T1 info`

```
DS1 SLOT ATTRIBUTES

Slot   Type    Format    Supp      Signal    LineComp   ClkSync    Src    Active
  3     T1       D4       ZCS      Rob Bit      1         Prim      Loop     Yes
  3     T1       D4       ZCS      Rob Bit      1         None      Local    Yes
```

PRI Information Report

Print Menu Option: `PRI Info`
Sections: Network Selection, Special Service, Call-by-Call and Dial Plan Routing Tables; PRI Information

```
PRI INFORMATION

System: By line

BchnlGrp #:       Slot:       TestTelNum:     NtwkServ:   Incoming Routing:
1                 9                        00011         By Line Appearance

Channel ID:  1

Line         PhoneNumber      NumberToSend

Network Selection Table

Entry Number:       0         1        2        3
Pattern to Match:   101****   10***    101****

Special Service Table

Entry Number:          0      1        2        3      4      5     6     7
Pattern to Match:      011    010      01       00     0      1
Operator:              none   none     OP       OP     OP/P   none  none  none
Type of Number:        I      I        I        N      N      I     I     N
Digits to Delete:      3      1        3        2      1      1     0     0

Call-By-Call Service Table

Entry Number:      0          1                2              3           4
Pattern    0:      777
Pattern    1:                  212555
Pattern    2:                  212
Call Type:         BOTH       BOTH             BOTH           BOTH        BOTH
NtwkServ:                     No Service                      OUT WATS
DeleteDigits:      0          1                2              0           0

Entry Number:      5          6                7              8           9
Call Type:         BOTH       BOTH             BOTH           BOTH        BOTH
NtwkServ:          No Service                  00111
DeleteDigits:      0          0                0              0           0
```

PRI Information Report—*Continued*

```
Dial Plan Routing Table

Entry Number:            0           1            2             3
NtwkServ:                            OUT WATS     Any service   11100
Expected Digits:         0           0            11            0
Pattern to Match:                    222
Digits to Delete:        0           1            0             0
Digits to Add:                       22

Entry Number:            4           5            6             7
NtwkServ:                11100
Expected Digits:         2           1            0             0
Pattern to Match:        2
Digits to Delete:        0           1            2             0
Digits to Add:           2

Entry Number:            8           9            10            11

PRI INFORMATION

NtwkServ:
Expected Digits:         0           0            0             0
Pattern to Match:
Digits to Delete:        0           0            0             0
Digits to Add:

Entry Number:           12          13            14            15
NtwkServ:
Expected Digits:         0           0            0             0
Pattern to Match:
Digits to Delete:        0           0            0             0
Digits to Add:
```

Remote Access (DISA) Information Report

Print Menu Option: `Rmote Access`
Sections: General Options; System Default Class of Restrictions (Non-TIE); System Default Class of Restrictions (TIE); Barrier Code Administration

```
GENERAL OPTIONS (ACCESS CODE 889)

Barrier Code required for Non-TIE DISA lines: Yes
Barrier Code required for TIE DISA lines    :No
Automatic Queuing enabled for DISA lines    :Yes
System Wide Barrier Code Length: 07
Date And Time of Last Barrier Code Length Change: 09:23:94, 09:45 PM

SYSTEM DEFAULT CLASS OF RESTRICTIONS (NON-TIE)

Restriction          :  UNRESTRICTED
ARS Restriction Level:  3
Allowed Lists        :
Disallowed Lists     :

SYSTEM DEFAULT CLASS OF RESTRICTIONS (TIE)

Restriction          :  UNRESTRICTED
ARS Restriction Level:  3
Allowed Lists        :
Disallowed Lists     :

BARRIER CODE ADMINISTRATION

Barrier Code number  :  1
Barrier Digits       :  2468345
Restriction          :  OUTWARD RESTRICTED
ARS Restriction Level:  3
Allowed Lists        :
Disallowed Lists     :

Barrier Code number  :  2
Barrier Digits       :  1234693
Restriction          :  UNRESTRICTED
ARS Restriction Level:  3
Allowed Lists        :
Disallowed Lists     :

Barrier Code number  :  16
Barrier Digits       :  9876115
Restriction          :  OUTWARD RESTRICTED
ARS Restriction Level:  0
Allowed Lists        :
Disallowed Lists     :
```

Operator Information Report

Print Menu Option: `Oper Info`
Sections: Operator Positions; General Options; DSS Options; QCC Operator Options: QCC Call Types

```
OPERATOR POSITIONS

PORT                                  CALL ALERT
ADDR.   EXT #    LABEL     TYPE       (QCC ONLY)
====    =====   =======    ====       ==========
1/ 1       10   OPERATR     QCC          No
1/ 5       14   EXT 14      DLC          N/A
2/ 1       18   EXT 18      DLC          N/A
2/ 5       22   OPERATR     DLC          N/A
6/ 1       42   EXT 42      DLC          N/A

GENERAL OPTIONS

Length of hold reminder timer: 60 sec
DLC Automatic hold enabled   : No

DIRECT STATION SELECTOR (DSS) OPTIONS

BUTTON       FIRST
NUMBER     DIAL CODE
======     =========
  1              0
  2             50
  3            100
Operator Call Park codes:  881  882  883  884  885  886  884  888

QCC OPERATOR OPTIONS

Listed Directory Number for queue : 800
Held calls return to queue        : No
Automatic hold enabled            : No
Calls-in-queue alarm threshold    : 0
Time until priorities are elevated: 0 sec
Message Center Operators          :
One Touch Extend                  : AUTOMATIC
Rings before extended calls return: 4
Backup operator station           :
Voice Announce on Call 5 button   : Disable
```

Operator Information Report—*Continued*

```
QCC CALL TYPES:
        CALL TYPE           PRIORITY    OPERATORS
=======================     ========    ===================
Dial 0 Operator                4          10
Follow Forward                 4          N/A
Unassigned DID                 4          10
Listed Directory Number        4          10
Operator's Extension           4          N/A
Returning                      4           0
Group Coverage
     Group #    1              4
     Group #    2              4
     Group #    3              4
     Group #    4              4
     Group #    5              4
     Group #    6              4
     Group #    7              4
     Group #    8              4
     Group #    9              4
     Group #   10              4
     Group #   11              4
     Group #   12              4
     Group #   13              4
     Group #   14              4
     Group #   15              4
     Group #   16              4
     Group #   17              4
     Group #   18              4
     Group #   19              4
     Group #   20              4
     Group #   21              4
     Group #   22              4
     Group #   23              4
     Group #   24              4
     Group #   25              4
     Group #   26              4
     Group #   27              4
     Group #   28              4
     Group #   29              4
     Group #   30              4
```

Allowed Lists Report

Print Menu Option: `AllowList`
Sections: Lists 1 through 7

```
ALLOWED LISTS

List :   0

Entry 0:   ------
Entry 1:   ------
Entry 2:   ------
Entry 3:   ------
Entry 4:   ------
Entry 5:   ------
Entry 6:   ------
Entry 7:   ------
Entry 8:   ------
Entry 9:   ------
   .
   .
   .
List :   7

Entry 0:   ------
Entry 1:   ------
Entry 2:   ------
Entry 3:   ------
Entry 4:   ------
Entry 5:   ------
Entry 6:   ------
Entry 7:   ------
Entry 8:   ------
Entry 9:   ------
```

Access to Allowed Lists Report

Print Menu Option: `AllowListTo`

```
ACCESS TO ALLOWED LISTS

FOR REMOTE ACCESS 17 & 18 MEAN TIE & NON-TIE RESTRICTIONS

List    1    STNS      10

             RACC       1      17      18

List    3    STNS      33

             RACC
```

Disallowed Lists Report

Print Menu Option: `DisallowLst`
Sections: Lists 1 through 7

```
DISALLOWED LISTS

List :   0

Entry 0:   ------------
Entry 1:   ------------
Entry 2:   ------------
Entry 3:   ------------
Entry 4:   ------------
Entry 5:   ------------
Entry 6:   ------------
Entry 7:   ------------
Entry 8:   ------------
Entry 9:   ------------
   .
   .
   .
List :   7

Entry 0:   ------------
Entry 1:   ------------
Entry 2:   ------------
Entry 3:   ------------
Entry 4:   ------------
Entry 5:   ------------
Entry 6:   ------------
Entry 7:   ------------
Entry 8:   ------------
Entry 9:   ------------
```

Access to Disallowed Lists Report

Print Menu Option: `DisallowTo`

```
ACCESS TO DISALLOWED LISTS

FOR REMOTE ACCESS 17 & 18 MEAN TIE & NON-TIE RESTRICTIONS

List     1   STNS       33

             RACC        9

List     3   STNS       33

             RACC
```

Automatic Route Selection Report

Print Menu Option: ARS
Sections: Tables

```
AUTOMATIC ROUTE SELECTION

ARS IS: ACTIVE           ACCESS CODE: 9

TABLE 17: Default Toll Output Table

Pool      Absorb   Other Digits           FRL     Call type     Start    Pattern
1)70--        00   -------------------     3      BOTH          --:--    A
2)----        --   -------------------     -      -----         --:--    A
3)----        --   -------------------     -      -----         --:--    A
4)----        --   -------------------     -      -----         --:--    A
5)----        --   -------------------     -      -----         --:--    B
6)----        --   -------------------     -      -----         --:--    B

Pool      Absorb   Other Digits           FRL     Call type     Start    Pattern
1)70--        00   -------------------     3      BOTH          --:--    B
2)----        --   -------------------     -      -----         --:--    B
3)----        --   -------------------     -      -----         --:--    B
4)----        --   -------------------     -      -----         --:--    B
5)----        --   -------------------     -      -----         --:--    B
6)----        --   -------------------     -      -----         --:--    B

TABLE 18: Default Local Output Table

Pool      Absorb   Other Digits           FRL     Call type     Start    Pattern
1)70--        00   -------------------     3      BOTH          --:--    A
2)----        --   -------------------     -      -----         --:--    A
3)----        --   -------------------     -      -----         --:--    A
4)----        --   -------------------     -      -----         --:--    A
5)----        --   -------------------     -      -----         --:--    B
6)----        --   -------------------     -      -----         --:--    B

Pool      Absorb   Other Digits           FRL     Call type     Start    Pattern
1)70--        00   -------------------     3      BOTH          --:--    B
2)----        --   -------------------     -      -----         --:--    B
3)----        --   -------------------     -      -----         --:--    B
4)----        --   -------------------     -      -----         --:--    B
5)----        --   -------------------     -      -----         --:--    B
```

Automatic Route Selection Report—*Continued*

```
TABLE 19: Dial 0 Output Table

Pool      Absorb   Other Digits          FRL      Call type     Start    Pattern
1)70--        00   -------------------    3       BOTH          --:--    A

TABLE 20: N11 Output Table
01)411 02)611 03)811 04)911

Pool      Absorb   Other Digits          FRL      Call type     Start    Pattern
1)70--        00   -------------------    3       BOTH          --:--    A
1)70--        00   -------------------    3       BOTH          --:--    A
```

Extension Directory Report

Print Menu Option: `Ext Direct`

EXTENSION DIRECTORY

Port Addr	Ext #	Label	FACE	HBIS	RCFW	MIDC	VSIG	RSTR	ARSR	2BDT	Port Addr	Ext #	Label	FACE	HBIS	RCFW	MIDC	VSIG	RSTR	ARSR	2BDT
1/ 1	10	OPERATR	N	N	N	N		U	3	N	1/21	710		N	N	N	N		U	3	N
1/ 2	11		N	N	N	N		O	3	Y	1/22	711		N	N	N	N		U	3	N
1/ 3	12		N	N	N	N		U	3	Y	1/23	712		N	N	N	N		U	3	N
1/ 4	13	EXT 13	N	N	N	N		U	3	N	1/24	713		N	N	N	N		U	3	N
1/ 5	14	EXT 14	N	N	N	N		U	3	N	1/25	714		N	N	N	N		U	3	N
1/ 6	15		N	N	N	N		U	3	N	1/26	715		N	N	N	N		U	3	N
1/ 7	16		N	N	N	N		U	3	N	1/27	716		N	N	N	N		U	3	N
1/ 8	17		N	N	N	N		U	3	N	1/28	717		N	N	N	N		U	3	N
2/ 1	18	EXT 18	N	Y	N	N		U	3	N	2/ 2	19		N	Y	N	N		U	3	N
2/ 3	20		N	Y	N	N		U	3	N	2/ 4	21		N	Y	N	N		U	3	N
2/ 5	22	OPERATR	N	Y	N	N		U	3	N	2/ 6	23		N	Y	N	N		U	3	N
2/ 7	24		N	Y	N	N		U	3	N	2/ 8	25		N	Y	N	N		U	3	N
3/ 1	26		N	Y	N	N		U	3	N	3/ 2	27		N	Y	N	N		U	3	N
3/ 3	28		N	Y	N	N		U	3	N	3/ 4	29		N	Y	N	N		U	3	N
3/ 5	30	AUDIXVP	N	Y	N	N		U	3	N	3/ 6	31		N	Y	N	N		U	3	N
3/ 7	32	AUDIXVP	N	Y	N	N		U	3	N	3/ 8	33		N	Y	N	N		U	3	N
4/ 1	34		N	Y	N	N		U	3	N	4/ 2	35	AUDIXVP	N	Y	N	N		U	3	N
4/ 3	36	AUDIXVP	N	Y	N	N		U	3	N	4/ 4	37		N	Y	N	N		U	3	N
4/ 5	38		N	Y	N	N		U	3	N	4/ 6	39		N	Y	N	N		U	3	N
4/ 7	40		N	Y	N	N		U	3	N	4/ 8	41		N	Y	N	N		U	3	N
6/ 1	42	EXT 42	N	N	N	N		U	3	N	6/21	742		N	N	N	N		U	3	N
.																					
.																					
.																					
7/ 1	54	EXT 54	N	N	N	N		U	3	N	7/2	754		N	N	N	N		U	3	N

System Directory Report

Print Menu Option: `Sys Direct`

```
SYSTEM DIRECTORY

 Code  Name               Number           Display
  600  ABC Company        555-9999           YES
  601  Jacques Smith      5551212            YES
  605  Travel Agency      912015556677       YES
```

Group Paging Report

Print Menu Option: `Group Page`

```
GROUP PAGING

Group #   793   STNS   :   20   21   22   23   24   25

Group #   794   STNS   :   15   16   17   18   19
```

Extension Information Report

Print Menu Option: Ext Info plus extension number

```
EXTENSION INFORMATION

Extn     SS/PP     Type
  10     1/ 1      MLX-20L + 1 DSS

Pool Access         : 70  890  891  892  893  894  895  896  897  898  899
Page Group          :
Primary Coverage    :
Secondary Coverage  :
Coverage Group      : 5
Group Coverers      : 773
NS Groups           : 10
Group Calling Member:
Pickup Groups       :
Allowed Lists       :
Disallowed Lists    :
Restrictions        : UNRESTRICTED
Auto Callback       : OFF
Call Waiting        : ON
Abbreviated Ring    : ON
Line Preference     : ON
Shared SA Ring      : ON
Receive Voice Calls : ON
Coverage Inside     : OFF
Forwarding to       :
Delay Forwarding    : 0
ARS Restriction     : 3
Forced Account Code : No
Microphone Disable  : No
Remote Forward Allow: No
Trunk Transfer Allow: No
NS Exclusion        : No
Voice Announce Pair : No
Voice/Data Pair     : No
BIS/HFAI            : No
Language            : English
Authorization Code  : 3134
2B Data Port        : No
```

Extension Information Report—*Continued*

```
EXTENSION INFORMATION

Extn      SS/PP      Type
  10       1/ 1      MLX-20L + 1 DSS

Button      34      Blank                       Status None
Button      33      Blank                       Status None
Button      32      Blank                       Status None
Button      31      Blank                       Status None
Button      30      Blank                       Status None
Button      29      Blank                       Status None
Button      28      Blank                       Status None
Button      27      Blank                       Status None
Button      26      Blank                       Status None
Button      25      Blank                       Status None
Button      24      Blank                       Status None
Button      23      Blank                       Status None
Button      22      Blank                       Status None
Button      21      Blank                       Status None
Button      20      Forced Release              Status None
Button      19      Pool Inspect                Status None
Button      18      Headset Auto Answer         Status Off
Button      17      Join                        Status None
Button      16      Cancel                      Status None
Button      15      Alarm Status                Status Off
Button      14      Night Service               Status Off
Button      13      Headset Status              Status Off
Button      12      Destination                 Status None
Button      11      Release                     Status None
Button      10      Position Busy               Status Off
Button       9      Send/Remove Message         Status None
Button       8      Handset/Headset Mute        Status Off
Button       7      Source                      Status None
Button       6      Start                       Status None
Button       5      Call 5                      Status None
Button       4      Call 4                      Status None
Button       3      Call 3                      Status None
Button       2      Call 2                      Status None
Button       1      Call 1                      Status None
```

Group Coverage Information Report

Print Menu Option: `GrpCoverage`

```
GROUP COVERAGE INFORMATION

Group #     2   Senders :     6802 6804
Group #     5   Senders :       10   11   12   13   14   18   19   20   42
                              44   45   47 6810

DIRECT GROUP CALLING INFORMATION

Group #  :  770         Group Type : AutoLogout
Call Distribution Type   : CIRCULAR
Delay Announcement Ext # : 11
Message Waiting Station  : 20
Calls_in_queue Threshold : 1
External Alert ext #     : 21
Overflow Threshold (#)   : 1
Overflow to DGC group #  :

Group Coverage :   1

No.    EXT #         LABEL
 1
 2
 3
 4
 5
 6
 7
 8
 9
10
11
12
13
14
15
16
17
18
19
20
```

Direct Group Calling Information Report

Print Menu Option: `Grp Calling`
Sections: Each programmed group

```
DIRECT GROUP CALLING INFORMATION

Group #  : 782         Group Type : AutoLogout
Call Distribution Type   : CIRCULAR
Delay Announcement Ext # :
Message Waiting Station  :
Calls_in_queue Threshold : 1
External Alert ext #     :
Overflow Threshold (#)   : 1
Overflow Threshold (Time): 0
Overflow to DGC group #  :

Group Coverage :   1

No.    EXT #         LABEL
 1     12
 2     13
 3
 4
 5
 6
 7
 8
 9
10
11
12
13
14
15
16
17
18
19
20

LINES:
```

Night Service Information Report

Print Menu Option: `Night Service`

```
NIGHT SERVICE INFORMATION

OPERATOR      10 DGCG     #:
                 STNS      :   10
OPERATOR      14 DGCG     #:
                 STNS      :   14
OPERATOR      18 DGCG     #:
                 STNS      :   18
OPERATOR      22 DGCG     #:
                 STNS      :   22
OPERATOR      42 DGCG     #:
                 STNS      :   42

Password    :

Current Day : OFF

              Turn off at:      Turn on at:
  Sunday           :                :
  Monday           :                :
  Tuesday          :                :
  Wednesday        :                :
  Thursday         :                :
  Friday           :                :
  Saturday         :                :

Emergency Allowed List:
 0)
 1)
 2)
 3)
 4)
 5)
 6)
 7)
 8)
 9)
NS Excluded STNS:
  61   62   63   64   65
```

Group Call Pickup Report

Print Menu Option: `Call Pickup`

```
GROUP CALL PICKUP

Group #  1  STNS  :  10  11  12  13  I4  15  16
Group #  2  STNS  :  17  18  19  20
Group #  3  STNS  :  21  22  23  24  25  26  27  28  29  30
Group #  4  STNS  :  31
Group #  5  STNS  :  32
Group #  6  STNS  :  33
Group #  7  STNS  :  34
Group #  8  STNS  :  35
Group #  9  STNS  :  36
Group # 10  STNS  :  37
```

Error Log Report

Print Menu Option: `Error Log`

```
ERROR LOG

Last 30 System Errors:

Message                    ss/pp    Cnt  First        Last       Code
PRI SVC AUDIT TIMEOUT      00/00     -     -     01/08 00:00:53  7001
TIMEOUT COLD START         00/00     -     -     01/11 00:04:08  0001
PRI SVC AUDIT TIMEOUT      00/00     -     -     01/11 00:04:14  7001
TIMEOUT COLD START         00/00     -     -     01/21 00:22:14  0001
PRI SVC AUDIT TIMEOUT      00/00     -     -     01/03 00:22:14  7001
PRI SVC AUDIT TIMEOUT      00/00     -     -     01/04 00:22:14  7001
SOFTWARE COLD START        00/00     -     -     01/04 00:21:14  0003
SOFTWARE COLD START        00/00     -     -     01/04 00:21:14  0003
PRI SVC AUDIT TIMEOUT      00/00     -     -     01/04 00:21:14  7001
SOFTWARE COLD START        00/00     -     -     01/04 00:22:11  0003
PRI SVC AUDIT TIMEOUT      00/00     -     -     01/08 00:00:53  7001
TIMEOUT COLD START         00/00     -     -     02/11 00:04:08  0001
PRI SVC AUDIT TIMEOUT      00/00     -     -     02/11 00:04:14  7001
TIMEOUT COLD START         00/00     -     -     02/21 00:22:14  0001
PRI SVC AUDIT TIMEOUT      00/00     -     -     02/03 00:22:14  7001
PRI SVC AUDIT TIMEOUT      00/00     -     -     02/04 00:22:14  7001
SOFTWARE COLD START        00/00     -     -     02/04 00:21:14  0003
SOFTWARE COLD START        00/00     -     -     02/04 00:21:14  0003
PRI SVC AUDIT TIMEOUT      00/00     -     -     02/04 00:21:14  7001
SOFTWARE COLD START        00/00     -     -     02/04 00:22:11  0003
PRI SVC AUDIT TIMEOUT      00/00     -     -     02/08 00:00:53  7001
TIMEOUT COLD START         00/00     -     -     03/11 00:04:08  0001
PRI SVC AUDIT TIMEOUT      00/00     -     -     03/11 00:04:14  7001
TIMEOUT COLD START         00/00     -     -     03/21 00:22:14  0001
PRI SVC AUDIT TIMEOUT      00/00     -     -     03/03 00:22:14  7001
PRI SVC AUDIT TIMEOUT      00/00     -     -     03/04 00:22:14  7001
SOFTWARE COLD START        00/00     -     -     03/04 00:21:14  0003
SOFTWARE COLD START        00/00     -     -     03/04 00:21:14  0003
PRI SVC AUDIT TIMEOUT      00/00     -     -     03/04 00:21:14  7001
SOFTWARE COLD START        00/00     -     -     03/04 00:22:11  0003
```

Authorization Code Information Report

Print Menu Option: `Auth Code`

```
SMDR Option for the Account Code Field is Home Extension

Extension         Authorization Code
10                3124
15                1357921
20                6578
23                443796
```

BRI Information Report

Print Menu Option: `BRI`

```
              BRI INFORMATION

Flexible Timers:
T200 = 1000 ms   T203 = 33 sec   T303 = 4 sec T305 = 30 sec T308 = 4 sec

Fixed Timers and Counters:
T202 = 2 sec   T309 = 90 sec   T310 = 60 sec   T313 = 4 sec
K Cntr = 1     N200 = 3        N201 = 260      N202 = 3

       Line    Service Profile ID       Directory Number
       801     908555100001             9085551000
       802     908555100101             9085551001
       803     908555100201             9085551002
       804     908555100301             9085551003
       805     908555100401             9085551004
       806     908555100501             9085551005
       807     908555100601             9085551006
       808     908555100701             9085551007
```

Switch 56 Data Information Report

Print Menu Option: `Switch 56`

```
Dial Plan Routing for Network Service

      Expected Digits:  3
      Digits to Delete: 0
      Digits to Add:    0

Trk   ss/pp   Dirction   InType   OutType   AnsSup   Discnt   Inmode   Outmode   Service
801   02/01   2 Way      Wink     Wink      120      180      T-Tone   T-Tone    TIE
802   02/02   Outgoing   Delay    Delay     160      180      Rotary   T-Tone    S56
803   02/03   Incoming   Auto     Auto      100      140      Rotary   Rotary    S56
.
.
.
808   02/08   2 Way      Wink     Wink      120      180      Rotary   Rotary    TIE
.
.
.
```

General System Programming Sequence

G

System Programming Sequence

This appendix lists the basic procedures, in the order in which they must be performed, to program a new system. In some instances, you may need to rearrange the system planning forms to match this order.

Basic System Operating Conditions

- Select the system programming position

  System→SProg Port
- Select the system language

  More→Language→SystemLang
- Select the system mode

  System→Mode
- Enable Automatic Maintenance Busy

  System→MaintenBusy
- Set the system time

  System→Time
- Set the system date

  System→Date
- Schedule automatic backups

  System→Backup/Restore→Auto Backup

System Renumbering

- Select the system numbering plan
  SysRenumber→Default Numbering
- Single renumbering
  SysRenumber→Single
- Block renumbering
  SysRenumber→Block
- DSS console page buttons
  SysRenumber→Single→**More**→DSS Buttons

Identify System Operator Positions

- Identify QCC system operator positions
  Operator→Positions→Queued Call
- Identify DLC system operator positions
  Operator→Positions→Direct Line

Lines and Trunks

- Specify type of trunk on 400 or 800 GL/LS module
  LinesTrunks →LS/GS/DSL
- Identify dial signaling for loop-start/ground-start trunks
  LinesTrunks→TT/LS Disc→Outmode
- Classify disconnect signaling reliability for loop-start trunks
  LinesTrunks→TT/LS Disc→LS Disconnect
- Specify toll prefix requirements
  LinesTrunks→Toll Type
- Specify Hold Disconnect interval
  LinesTrunks→**More**→HoldDiscnct
- Assign the QCC queue priority
  LinesTrunks→**More**→QCC Prior
- Identify QCC operator to receive calls
  LinesTrunks→More→QCC Oper
- Assign trunks to pools
  LinesTrunks→Pools

Complex Lines

- Program DS1 trunks

  LinesTrunks→LS/GS/DSL
- Program tie lines

  LinesTrunks→TIE Lines
- Program DID trunks

  LinesTrunks→DID
- Program PRI trunks

  LinesTrunks→PRI
- Program BRI trunks

  LinesTrunks→BRI

Telephones

Many programmers prefer to program Auxiliary Equipment before programming Telephones.

- Assign trunks to telephones

  Extensions→LinesTrunks
- Copy trunk assignments

  Extensions→Line Copy
- Identify Principal User for Personal Line

  LinesTrunks→**More**→PrncipalUsr
- Assign ring, voice, outgoing only, shared buttons

  More→Cntr-Prg
- Copy telephone button assignments

  More→Cntr-Prg
- Identify analog multiline telephones with BIS or HFAI

  Extensions→BIS/HFAI
- Identify analog multiline telephones requiring Voice Announce to Busy

  Extensions→VoiceSingl

Auxiliary Equipment

- Program Music On Hold

  `AuxEquip→MusicOnHold`

- Program loudspeaker paging

  `AuxEquip→Ldspkr Pg`

- Program a fax port

  `AuxEquip→Fax`

- Identify the jack used for maintenance alarms

  `AuxEquip→MaintAlarms`

- Program Voice Mail and Automated Attendant

  `AuxEquip→VMS/AA→TransferRtn`

Print Reports

- Print system reports to simplify checking your work and to provide a paper copy of system configuration

  More→`Print`

Programming Special Characters

H

This appendix provides the special characters used in dialing sequences for numbers dialed automatically. The characters allowed depend on the type of telephone. Ask your system manager which special characters are needed and when to use them.

Single-Line Telephones

Some dialing sequences need special characters. For example, you would press and release either the **Recall** or **Flash** button or the switchhook to insert a pause in a dialing sequence after a dial-out code to allow the system to seize an outside line before dialing the number.

Table H–1. Special Characters for Single-Line Telephones

Press...	Means...
Recall, **Flash** or switchhook	Pause. Inserts 1.5 second pause in the dialing sequence. Multiple consecutive pauses are allowed.
#	End of Dialing. Used to signal the end of the dialing sequence or to separate group digits. e.g., account code from number dialed.

Analog Multiline Telephones

Some dialing sequences need special characters. For example, you would press **Hold** to insert a pause (p) after the dial-out code in a dialing sequence to allow the system to seize an outside line before dialing the number. A pause can also be used to separate a phone number from an extension number.

Table H–2. Special Characters for Analog Multiline Telephones

Press...	See*...	Means...
Drop†	s	Stop. Inserts a stop within a sequence of automatically dialed numbers. For example, an outside **Auto Dial** button may be programmed with a password then a Stop, followed by a phone number. To use Auto Dial with a Stop in the sequence, press the button to dial the password, listen for the dialing and connection, and press the button again to dial the phone number.
Hold	p	Pause. Inserts 1.5 second pause in the dialing sequence. Multiple consecutive pauses are allowed.
Conference†	f	Flash. Sends a switchhook flash. Must be the first entry in the dialing sequence.
##	#	End of Dialing for **Auto Dial** buttons. Used at the end of a dialing sequence to indicate you have finished dialing or to separate one group of dialed digits from another.
#	#	End of Dialing. Used at the end of a dialing sequence to indicate you have finished dialing or to separate one group of dialed digits from another.

* Display phones only.

† Not available on MLC-5 cordless phones.

MLX Non-Display Telephone

Some dialing sequences need special characters. For example, you would press **Hold** to insert a pause in a dialing sequence after a dial-out code to allow the system to seize an outside line before dialing the number. A pause can also be used to separate a phone number from an extension number.

Table H–3. Special Characters for MLX Non-Display Telephone

Press...	Means...
Drop	Stop. Halts the dialing sequence to allow the system to respond.
Hold	Pause. Inserts 1.5 second pause in the dialing sequence. Multiple consecutive pauses are allowed.
Conf	Flash. Sends a switchhook flash. Must be the first entry in the dialing sequence.
##	End of Dialing for Extension Programming only. Used at the end of a dialing sequence to indicate you have finished dialing or to separate one group of dialed digits from another, for example, account codes from number dialed.
#	End of Dialing. Used to signal the end of the dialing sequence or to separate group digits, for example, account code from number dialed.

MLX Display Telephones

When you program Personal Directory listings, Auto Dial buttons, or Personal Speed Dial codes, you are storing a sequence of numbers to be dialed automatically.

Some dialing sequences need special characters. For example, you would press **Hold** to insert a pause in a dialing sequence after a dial-out code to allow the system to seize an outside line before dialing the number. A pause can also be used to separate a phone number from an extension number.

Table H–4. Special Characters for MLX Display Telephones

Press...	See...	Means...
Drop	s	Stop. Halts dialing sequence to allow for system response.
Hold	p	Pause. Inserts 1.5 sec. pause in dial sequence. Multiple consecutive pauses allowed.
Conf	f	Flash. Sends switchhook flash. Must be first entry in sequence.
##	#	End of Dialing for Extension Programming only. Used at the end of a dialing sequence to indicate you have finished dialing or to separate one group of dialed digits from another, for example, account codes from number dialed.
#	#	End of Dialing. Used to signal end of dial sequences or to separate group digits, for example, account code from number dialed.

Glossary

7

7500B Data Module See *ISDN 7500B Data Module*.

A

account code Code used to associate incoming and outgoing calls with corresponding accounts, employees, projects, and clients.

Accunet AT&T's switched digital service for 56-kbps, 64-kbps restricted, and 64-kbps clear circuit-switched data calls.

address A coded representation of the destination of data or of the data's originating terminal, such as the dialed extension number assigned to the data terminal. Multiple terminals on one communication line must each have a unique address.

ADDS (Automated Document Delivery System) Computer-based application that stores documents in a database and automatically faxes them on request.

adjunct Optional equipment used with the communications system, such as an alerting device or *modem* that connects to a multiline telephone or to an extension jack.

ALS (Automatic Line Selection) Programmed order in which the system makes outside lines available to a user.

AMI (alternate mark inversion) Line coding format in which a binary one is represented by a positive or negative pulse, a binary zero is represented by no line signal, and subsequent binary ones must alternate in polarity; otherwise, a *bipolar violation* occurs. AMI is used in the *DS1* interface.

analog transmission Mode of transmission in which information is represented in continuously variable physical quantities such as amplitude, frequency, phase, or resistance. See also *digital transmission*.

ANI (automatic number identification) Process of automatically identifying a caller's billing number and transmitting that number from the caller's local central office to another point on or off the public network.

application Software and/or hardware that adds functional capabilities to the system. For example, MERLIN Identifier is an application that provides caller identification information (if available in the local area or jurisdiction).

ARS (Automatic Route Selection) System feature that routes calls on outside trunks according to the number dialed and trunk availability.

ASCAP (American Society of Composers, Artists, and Producers)

ASN (AT&T Switched Network) AT&T telecommunications services provided through an Integrated Services Digital Network Primary Rate Interface (ISDN-PRI) trunk, *Accunet* switched digital service, *Megacom*, *Megacom 800*, Software Defined Network (*SDN*), Multiquest, and Shared Access for Switch Services (SASS).

asynchronous data transmission A method of transmitting a short bitstream of digital data, such as printable characters represented by a 7- or 8-*bit* ASCII code. Each string of data bits is preceded by a start bit and followed by a stop bit, thus permitting data to be transmitted at irregular intervals. See also *synchronous data transmission*.

AT&T Attendant Application with equipment that connects to one or more *tip/ring* extension jacks and automatically answers incoming calls with a recorded announcement; directs calls in response to touch tones.

AT&T Switched Network See *ASN*.

AUDIX Voice Power A voice-processing application, part of *IS II/III*, that provides Automated Attendant, Call Answer, Information Service, Message Drop, Voice Mail, and, optionally, *FAX Attendant System* for use with the system.

Automated Attendant *IS II/III*, MERLIN MAIL, and AT&T *Attendant* application that automatically answers incoming calls with a recorded announcement and directs callers to a department, an extension, or the system operator.

Automatic Line Selection See *ALS*.

Automatic Number Identification See *ANI*.

automatic ringdown tie-trunk See *automatic-start tie trunk*.

Automatic Route Selection See *ARS*.

automatic-start tie trunk *Tie trunk* on which incoming calls are routed to an operator or other designated destination without a start signal, as soon as the trunk is seized; the destination is specified during programming. Also called “automatic ringdown” or “auto-in” tie trunk.

auxiliary power unit Device that provides additional power to the system.

B

B8ZS (bipolar 8 zero substitution) Line-coding format that encodes a string of eight zeros in a unique binary sequence to detect *bipolar violation*. See also *bipolar signal*.

backup Procedure for saving a copy of system programming onto a floppy disk or *memory card*. See also *restore.*

bandwidth Difference, expressed in hertz, between the highest and lowest frequencies in a range that determines channel capacity.

barrier code Password used to limit access to the *Remote Access* feature of the system.

basic carrier Hardware that holds and connects the *processor*, *power supply*, and up to five modules in the system. See also *expansion carrier*.

baud rate Strictly speaking, a measurement of transmission speed equal to the number of signal level changes per second. In practice, often used synonymously with *bit rate* and *bps*.

B-channel (Bearer-channel) 64-kbps channel that carries a variety of digital information streams, such as voice at 64 kbps, data at up to 64 kbps, wideband voice encoded at 64 kbps, and voice at less than 64 kbps, alone or combined.

Bearer-channel See *B-channel*.

Behind Switch mode One of three modes of system operation, in which the control unit is connected to (behind) another telephone switching system, such as *Centrex* or Definity, which provides features and services to telephone users. See also *Hybrid/PBX mode* and *Key mode*.

binary code Electrical representation of quantities or symbols expressed in the base-2 number system, which includes zeros and ones.

bipolar 8 zero substitution See *B8ZS*.

bipolar signal Digital signal in which pulses (ones) alternate between positive and negative. See also *AMI*, *B8ZS*, and *bipolar violation*.

bipolar violation Condition occurring when two positive or two negative pulses are received in succession. See also *AMI* and *B8ZS*.

BIS (Built-In Speakerphone) Part of the model name of some analog multiline telephones.

bit (binary digit) One unit of information in binary notation; it can have one of two values, zero or one.

bit rate Speed at which bits are transmitted, usually expressed in *bps*. Also called “data rate.” See also *baud rate.*

blocking Condition in which end-to-end connections cannot be made on calls because of a full load on all possible services and facilities. See also *glare.*

BMI (Broadcast Music Incorporated)

board A module, for example, 100D or 408 MLX GS/LS, that allows you to connect lines/trunks and extensions to the communication system.

board assignment SPM procedure for assigning line/trunk and extension modules to slots on the control unit.

board renumbering System programming procedure for renumbering boards that have already been assigned to specific slots on the control unit.

BRI (Basic Rate Interface) Standard digital frame format that specifies the protocol between the communication system and a terminal. BRI runs at 192 Kbps and provides two 64-Kbps voice or B-channels and on 16-Kbps signaling or D-channel per port. The remaining 48 Kbps are used for framing and D-channel contention.

broadband Transmission path having a bandwidth greater than a voice-grade channel.

BTMI (basic telephone modem interface)

bus Multiconductor electrical path used to transfer information over a common connection from any of several sources to any of several destinations.

button Key on the face of a telephone that is used to access a line, activate a feature, or enter a code on a communications system.

byte Sequence of *bit*s (usually eight) processed together. Also called “octet.”

C

Call Accounting System See *CAS*.

Call Accounting Terminal See *CAT*.

Calling group Team of individuals who answer the same types of calls.

Call Management System See *CMS*.

campus cable Cable that runs between buildings connected to the same communications system.

CAS (Call Accounting System) DOS- or UNIX system-based application that monitors and manages telecommunications costs.

CAT (Call Accounting Terminal) Standalone unit with a built-in microprocessor and data buffer that provides simple call accounting at a low cost.

CCITT (International Telegraph and Telephone Consultative Committee)

CCS (common-channel signaling) Signaling in which one channel of a group of channels carries signaling information for each of the remaining channels, permitting each of the remaining channels to be used to nearly full capacity. In the system’s 100D module, channel 24 can be designated as the signaling channel for channels 1–23.

centralized telephone programming Programming of features on individual telephones; performed at a central location by the *system manager*. See also *system programming* and *extension programming.*

central office	See *CO*.
Centrex	Set of system features to which a user can subscribe on telephone trunks from the local telephone company.
channel	Telecommunications transmission path for voice and/or data.
channel service unit	See *CSU*.
checksum	Sum of ones in a sequence of ones and zeros used to detect or correct errors in data transmission.
circuit-switched data call	Data call made through an exclusively established and maintained connection between *data stations*.
class of restriction	See *COR*.
clock synchronization	Operation of digital facilities from a common clock.
CMS	(Call Management System) DOS-based application that simulates the actions of a system operator by answering and distributing calls. Also produces reports for call analysis.
CO	(central office) Location of telephone switching equipment that provides local telephone service and access to toll facilities for long-distance calling.
coaxial cable	Cable consisting of one conductor, usually a small copper tube or wire within and insulated from another conductor of larger diameter, usually copper tubing or copper braid.
codec	(coder-decoder) Device used to convert analog signals such as speech, music, or television to digital form for transmission over a digital medium and back to the original analog form.
common channel signaling	See *CCS*.
communications system	Software-controlled processor complex that interprets dialing pulses, tones, and or keyboard characters and makes the proper interconnections both inside and outside. Consists of a computer, software, a storage device, and *carriers* with special hardware to perform the actual connections. Provides voice and/or data communications services, including access to public and private networks, for telephones and other equipment. Also referred to in this guide as “system,” short for MERLIN LEGEND Communications System.

control unit *Processor*, *power supply*, modules, *carrier*s, and housing of the system.

console Refers to telephone and adjuncts (if any) at operator or system programmer extension.

CONVERSANT Entry-level voice response application that automatically answers and routes calls and executes telephone transactions.

conversion resource See *modem pool*.

COR (class of restriction) Various types of restrictions that can be assigned to *remote access* trunks or barrier codes. These restrictions consist of Calling Restrictions, *ARS* Facility Restriction Levels (*FRL*s), Allowed Lists, Disallowed Lists, and Automatic Callback queuing.

Coverage Set of system features that can determine how extensions' calls are covered when the person at the extension is busy or not available.

CRC (cyclic redundancy check) An error-detection code used on *DS1* facilities with the extended superframe format (*ESF*).

CSU (channel service unit) Equipment used on customer premises to provide *DS1* facility terminations and signaling compatibility.

cyclic redundancy check See *CRC*.

D

D4 framing format *Framing format* consisting of a sequence of individual frames of 24 eight-*bit* slots and one signal bit (193 bits) in a 12-frame superframe. See also *ESF*.

Data-channel See *D-channel*.

data communications equipment See *DCE*.

data hunt group See *DHG*.

data module See *ISDN 7500B Data Module*.

data rate See *bps*.

data station Special type of extension where data communications take place; includes *DTE* and *DCE*; sometimes a telephone is also part of a data station.

data terminal An input/output (*I/0*) device (often a personal computer) that can be connected to the control unit via an interface.

data terminal equipment See *DTE* and *data terminal*.

DCE (data communications equipment) Equipment such as *modem*s or data modules used to establish, maintain, and terminate a connection between the system and data terminal equipment (*DTE*), such as printers, personal computers, host computers, or network workstations.

D-channel (Data-channel) 16-or 64-kbps channel that carries signaling information or data on a *PRI*.

DCP (Digital Communications Protocol) AT&T proprietary protocol to transmit digitized voice and data over the same communications link. A DCP link is made up of two 64-kbps information (I) channels and one signaling (S) channel to the B- and D-channels used in an *ISDN*.

dedicated feature buttons The imprinted feature buttons on a telephone: **Conf** or **Conference**, **Drop**, **Feature**, **HFAI** (Hands Free Answer on Intercom), **Hold**, **Message**, **Mute** or **Microphone**, **Recall**, **Speaker** or **Speakerphone**, and **Transfer**.

delay-dial-start tie trunk *Tie trunk* on which the originating end of the tie trunk transmits an off-hook signal to the receiving end and waits for the receiving end to send an off-hook signal followed by an on-hook signal. Also called “dial-repeating tie trunk.”

DFT (direct facility termination) See *personal line*.

DHG (data hunt group) Group of analog or digital *data stations* that share a common access code. Calls are connected in a round-robin fashion to the first available data station in the group.

dial access See *feature code*.

Dialed Number identification Service See *DNIS*.

dial-out code Digit (usually a *9*) or digits dialed by telephone users to get an outside line.

dial plan Numbering scheme for system extensions, lines, and trunks.

dial-repeating tie trunk See *delay-dial start tie trunk*.

DID (Direct Inward Dialing) Service that transmits from the telephone company central office and routes incoming calls directly to the called extension, *calling group*, or outgoing trunk *pool*, bypassing the system operator.

DID trunk Incoming trunk that receives dialed digits from the local exchange, allowing the system to connect directly to an extension without assistance from the system operator.

digital Representation of information in discrete elements such as off and on or zero and one. See also *analog transmission*.

Digital Communications Protocol See *DCP*.

Digital Signal 0 See *DS0*.

Digital Signal 1 See *DS1*.

digital switch element See *DSE*.

digital transmission Mode of transmission in which the information to be transmitted is first converted to digital form and then transmitted as a serial stream of pulses. See also *analog transmission*.

DIP switch (dual in-line package) Switch on a 400EM module used to select the signaling format for tie-line transmission. Also used on other equipment for setting hardware options.

direct facility termination (DFT) See *personal line*.

Direct Inward Dialing See *DID*.

Direct-Line Console See *DLC*.

Direct Station Selector See *DSS*.

display buttons Buttons on an MLX display telephone used to access the telephone's display.

DLC (Direct-Line Console) Telephone used by a system operator to answer outside calls (not directed to an individual or a group) and inside calls, transfer calls, make outside calls for users with outward calling restrictions, set up conference calls, and monitor system operation.

DNIS (Dialed Number Identification Service) Service provided by the AT&T Switched Network (*ASN*); it routes incoming 800 or 900 calls according to customer-selected parameters, such as area code, state, or time of call.

door answering unit Device connected to a basic telephone jack and used at an unattended extension or front desk.

DOS (disk operating system)

DS0 (Digital Signal 0) Single 64-kbps voice or data channel.

DS1 (Digital Signal 1) *Bit*-oriented signaling interface that multiplexes twenty-four 64-kbps channels into a single 1.544-Mbps stream.

DSS (Direct Station Selector) 60-button *adjunct* that enhances the call-handling capabilities of an MLX-20L or MLX-28D telephone used as an operator console.

DTE (data terminal equipment) Equipment that makes the endpoints in a connection over a data connection, for example, a data terminal, personal computer, host computer, or printer.

DTMF signaling (dual-tone multifrequency signaling) Touch-tone signaling from telephones using the voice transmission path. DTMF signaling provides 12 distinct signals, each representing a dialed digit or character, and each composed of two voiceband frequencies.

E

E&M signaling Trunk supervisory signaling, used between two communications systems, in which signaling information is transferred through two-state voltage conditions (on the Ear and Mouth leads) for analog applications and through two *bit*s for digital applications. See also *tie trunk*.

EIA (Electronic Industries Association)

EIA-232-D Physical interface, specified by the *EIA*, that transmits and receives asynchronous data at speeds of up to 19.2 Kbps over cable distances of 50 ft (15m) or less.

Electronic Switching System See *ESS*.

endpoint Final destination in the path of an electrical or telecommunications signal.

ESF (extended superframe format) *Framing format* consisting of individual frames of 24 eight-*bit* slots and one signal bit (193 bits) in a 24-frame extended superframe. See also *D4 framing format.*

ESS (Electronic Switching System) Class of central office (*CO*) switching systems developed by AT&T in which the control functions are performed principally by electronic data processors operating under the direction of a stored program.

expansion carrier *Carrier* added to the control unit when the basic carrier cannot house all of the required modules. Houses a power supply and up to six additional modules.

extension An endpoint on the internal side of the communications system. An extension can be a telephone with or without an adjunct. Also called “station.” See also *data station.*

extension jack An analog, digital, or *tip/ring* physical interface on a module in the control unit for connecting a telephone or other device to the system. Also called “station jack.”

extension programming Programming performed at an extension to customize telephones for personal needs; users can program features on buttons, set the telephone ringing pattern, and so on. See also *extension programming* and *system programming*.

extended superframe format See *ESF*.

F

facility Equipment (often a *trunk*) constituting a telecommunications path between the system and the telephone company central office (*CO*).

Facility Restriction Level	See *FRL*.
factory setting	Default state of a device or feature when an optional setting is not programmed by the user or system manager.
fax	(facsimile) Scanning and transmission of a graphic image over a telecommunications facility, or the resulting reproduced image, or the machine that does the scanning and transmitting.
FAX Attendant System	Fax handling and processing application available with *AUDIX Voice Power*.
FCC	Federal Communications Commission
feature	Function or service provided by the system.
feature code	Code entered on a dialpad to activate a feature.
feature module	Prior to Release 3.0, a circuit pack inserted into the *processor* module, used to provide system features and replaced when the system is upgraded.
Feature screen	Display screen on MLX display telephones; provides quick access to commonly used features.
ferrite core	Attachment to the AC power cord and ground wire of the carrier power supply for compliance with FCC part 15 requirements.
Flash ROM	Beginning with Release 3.0, a type of memory provided on the *processor* module.
foil shield	Copper foil sheet (for power units) used to prevent excessive noise on the module.
forced idle	Condition of the system during certain programming or maintenance procedure; system prevents initiation of new calls.
foreign exchange	See *FX*.
frame	One of several segments of an analog or digital signal that has a repetitive characteristic. For example, a *DS1* frame consists of a framing *bit* and 24 bytes, which equals 193 bits.
framing format	Pattern of *frames* used in transmissions.
frequency generator	See *ring generator*.
FRL	(Facility Restriction Level) *ARS* calling restriction type that restricts outgoing calls to certain specified routes.

FX (Foreign exchange) Central office (*CO*) other than the one that is providing local access to the public telephone network.

G

General-Purpose Adapter See *GPA*.

glare Condition that occurs when a user tries to call out on a *loop-start* trunk at the same time that another call arrives on the same trunk.

GPA (General-Purpose Adapter) Device that connects an analog multiline telephone to optional equipment such as an answering machine or a fax machine.

ground-start trunk Trunk on which the communications system, after verifying that the trunk is idle (no ground on tip lead), transmits a request for service (puts ground on ring lead) to the telephone company central office (*CO*).

Group IV (G4) fax machine A fax unit, offering 400 by 100 dots per inch (DPI) in fine mode, that can operate at any speed for communication with a Group III (G3) fax machine or another Group IV (G4) fax machine.

H

Hands Free Answer on Intercom See *HFAI*.

hands-free unit See *HFU*.

headset Lightweight earpiece and microphone used for hands-free telephone operation.

HFAI (Hands Free Answer on Intercom) Feature that allows a user to answer a voice-announced call.

HFU (Hands-Free Unit) Unit for analog multiline telephones that allows users to make and receive calls on the speakerphone without using the handset.

Home screen Display normally shown on an MLX display telephone; shows time, date, and call information, and shows when some features are in use.

host Telephone company or other switch providing features and services to the system users, usually when the system is operating in *Behind Switch mode*.

Hybrid/PBX mode One of three modes of system operation, in which the system uses trunk *pool*s and *ARS* in addition to *personal lines*. Provides a single interface (**SA** buttons) to users for both internal and external calling. See also *Behind Switch mode* and *Key mode*.

I

ICLID (Incoming Call Line Identification) A service provided by some local telephone companies (if local regulations allow) that supplies the calling party telephone number. In Release 3.0 and later, an 800 GS/LS-ID module on the system can capture this information and display it on the screens of MLX telephones. See also *ANI*.

ICOM buttons (intercom buttons) Telephone buttons that provide access to inside system lines for calling other extensions or receiving calls from them.

immediate-start tie trunk *Tie trunk* on which no start signal is necessary; dialing can begin immediately after the trunk is seized.

in-band signaling See *robbed-bit signaling*.

inside dial tone A tone users hear when they are off-hook on an **SA** or **ICOM** *button*.

Inspect screen Display screen on an MLX display telephone that allows the user to preview incoming calls and see a list of the features programmed on line buttons.

Integrated Administration Capability of *IS III* that simplifies the programming of common information for the system, *AUDIX Voice Power*, and, if it is also installed, *FAX Attendant System*.

Integrated Services Digital Network See *ISDN*.

Integrated Solution II/III See *IS II/III*.

Integrated Voice Power Automated Attendant — *IS II* application that automatically answers incoming calls with a recorded announcement and directs callers to a department, an extension, or the system operator.

intercom buttons — See *ICOM buttons.*

interface — Hardware and/or software that links systems, programs, or devices.

I/O device — (input/output device) Equipment that can be attached to a computer internally or externally for managing a computer system's input and output of information.

IROB protector — (In-Range Out-of-Building protector) Surge-protection device for off-premises telephones at a location within 1000 feet (305 m) of cable distance from the control unit.

IS II/III — (Integrated Solution II or Integrated Solution III) Set of UNIX system-based applications that augments and provides additional services using the system.

ISDN — (Integrated Services Digital Network) Public or private network that provides end-to-end digital connectivity for all services to which users have access by a limited set of standard multipurpose user and *network interfaces*; provides digital circuit-switched or packet-switched connections within the network and to other networks for national and international digital connectivity.

ISDN 7500B Data Module — Data communications device that allows connection between an RS-232 *DTE* device and the control unit via MLX extension jacks on the 008 MLX or 408 GS/LS-MLX module.

J

jack — Physical connection point to the system for a telephone, trunk, or other device. Also called "port."

K

kbps — Kilobits per second.

Key mode One of three modes of system operation, in which the system uses personal lines on line buttons for outside calls, with a separate interface (***ICOM*** *buttons*) for internal calling. See also *Behind Switch mode* and *Hybrid/PBX mode.*

L

LAN (local area network) Arrangement of interconnected personal computers or terminals, sometimes accessing a host computer, sometimes sharing resources like files and printers.

LDN listed directory number

LED (light-emitting diode) Semiconductor device that produces light when voltage is applied; light on a telephone.

line Connection between extensions within the communications system; often, however, used synonymously with *trunk*.

line and trunk assignment Assignment of lines and trunks connected to the system control unit to specific buttons on each telephone.

line coding Pattern that data assumes as it is transmitted over a communications channel.

line compensation Adjustment for the amount of cable loss in decibels (dB), based on the length of cable between a 100D module and a channel service unit (*CSU*) or other far-end connection point.

line/trunk Refers to inside system lines and outside trunks in general terms. See also *line* and *trunk*.

line/trunk jack Physical interface on a module in the control unit for connecting an outside trunk to the communications system. Also called “trunk jack.”

line/trunk and extension module Module on which the jacks for connecting central office lines/trunks and/or the jacks for connecting the extensions are located.

local host computer access A method for connecting an extension jack to an on-site computer for data-only calls through a *modem* or data module.

local loop See *access line.*

logical ID A logical ID is a number that is associated with each connection to the communications system. There is one set of logical IDs for *extensions* and one set for *lines/trunks*. Line/trunk logical IDs are numbered from 1 to 80. Extension module logical IDs are numbered from 1 to 200. For *most* modules there is a one-to-one correspondence between the jack and the logical ID. Exceptions are the 100D, 800 NI-BRI and 008 OPT modules.

loop-start trunk Trunk on which a closure between the tip and ring leads is used to originate or answer a call. High-voltage 20-Hz AC ringing current from the central office signals an incoming call.

M

Magic On Hold An AT&T Music on Hold enhancement that promotes a company's products or services.

Mbps megabits per second

Megacom AT&T's tariffed digital *WATS* offering for outward calling.

Megacom 800 AT&T's tariffed digital 800 offering for inward calling.

memory card Storage medium, similar in function to a floppy disk, that allows information to be added to or obtained from the communication system through the PCMCIA interface slot on the processor module.

MERLIN Identifier Adjunct that allows users to receive, store, and use information provided by Caller ID.

MERLIN Mail Voice Messaging System Application that provides automated attendant, call answering, and voice-mail services on the system.

MFM (Multi-Function Module) Adapter that has a *tip/ring* mode for answering machines, modems, fax machines, and tip/ring alerts, and an *SAA* mode for -48 VDC alerts. Installed inside an MLX telephone, and is used to connect optional equipment to the telephone. The optional equipment and the telephone operate simultaneously and independently.

MLX-10 or MLX-10D telephone 10-line button digital telephone offered with (MLX- 10D) or without (MLX-10) a 2-line by 24-character display.

MLX-20L telephone 20-line button digital telephone with a 7-line by 24-character display.

MLX-28D telephone 28-line button digital telephone with a 2-line by 24-character display.

mode codes Streams of touch-tone codes used by voice messaging applications to communicate with the system's control unit.

modem Device that converts digital data signals to analog signals for transmission over a telephone line, and analog signals received on a telephone line to digital signals.

modem pool Pair, or group of pairs, of *modems* and data modules with interconnected RS-232 interfaces that converts digital signals to analog, or analog signals to digital, thereby allowing users with digital *data stations* to communicate with users who have analog data stations.

module Circuit pack in the control unit that provides the physical jacks for connection of telephones and/or outside trunks to the communications system. In the name of a module, the first digit indicates the number of *line/trunk* jacks it contains; the last digit indicates the number of *extension jacks* it contains. If no letters appear after the number, a line/trunk module provides *loop-start trunks* or an extension jack module provides analog or *tip/ring* jacks. For example, a 408 GS/LS MLX module contains four line/trunk jacks and eight digital (MLX) extension jacks, provides either loop-start (LS) or *ground-start* (GS)*trunks.*

Multi-Function Module See *MFM*.

multiline telephone An analog or digital (MLX) telephone that provides multiple line buttons for making or receiving calls or programming features.

multiplexing The division of a transmission channel into two or more independent channels, either by splitting the frequency band into a number of narrower bands or by dividing the channel into successive time slots.

Music On Hold Customer-provided music source or Magic on Hold connected to the system through a *loop-start* jack.

N

network Configuration of communications devices and software connected for information interchange.

network interface Hardware, software, or both that links two systems in an interconnected group of systems, for example, between the local telephone company and a PBX.

O

off-hook Telephone is said to be off-hook when the user has lifted the handset, pressed the **Speaker** button to turn on the speakerphone, or used a headset to connect to the communications system or the telephone network.

off-premises telephone See *OPT*.

ones density Requirement for channelized *DS1* service to the public network that eight consecutive zeros cannot occur in a digital data stream.

on-hook Telephone is said to be on-hook when the handset is hung up, the speakerphone is turned off, and the user is not using a headset to connect to the communications system or the telephone network.

OPT (off-premises telephone) *Single-line telephone* or other *tip/ring* device connected to the system through an 008 OPT module in the control unit. Appears as an inside extension to the system, but may be physically located away from the system.

OPX off-premises extension

out-of-band signaling Signaling that uses the same path as voice-frequency transmission and in which the signaling is outside the band used for voice frequencies.

P

parity
The addition of a *bit* to a bit string so that the total number of ones is odd or even, used to detect and correct transmission errors.

Passageway Solution
Set of four software applications to provide an interface between a personal computer and the system: cardfile, telephone programming application, call log and viewer, and applications manager.

pass-through
Connection from an internal *modem* to a programming jack on the system.

PBX
(private branch exchange) Local electronic telephone switch that serves local stations (for example, extensions within a business) and provides them with access to the public network.

PC
personal computer

PCMCIA memory card
Personal Computer Memory Card International Association memory card) See *memory card*.

personal line
Central office trunk that terminates directly on one or more telephones. In *Hybrid/PBX mode*, a personal line cannot be part of a trunk *pool*. Also called “DFT” (direct facility termination).

PFT
(Power Failure Transfer) Feature that provides continuity of telephone service during a commercial power failure by switching some of the system’s trunk connections to telephones connected to specially designated extension jacks.

pool
In *Hybrid/PBX mode*, a group of outside trunks that users can access with a Pool button or by dialing an access code on an ***SA*** *button*. Also used by the *ARS* feature when choosing the least expensive route for a call.

port
See *jack*. Also, refers to *extension* or *line jacks* before these are numbered according to the *dial plan* during programming. The lowest jack on a module is always port 1.

Power Failure Transfer
See *PFT*.

power supply module Device that directs electricity to modules and telephones on the system. One power supply module is needed for each carrier, and an *auxiliary power unit* is added if the module exceeds capacity.

PRI (Primary Rate Interface) Standard interface that specifies the protocol used between two or more communications systems. As used in North America, provides twenty-three 64-kbps *B-channel*s for voice and/or data and one 16-kbps *D-channel*, which carries multiplexed signaling information for the other 23 channels.

primary system operator position First jack on the first MLX or analog multiline extension module in the control unit, that is, the extension jack with the lowest logical ID in the system.

prime line Individual extension number assigned to a telephone in a system operating in *Behind Switch mode*. Each telephone user has his or her own prime line and is automatically connected to that line when he or she lifts the handset.

processor module Module in the second slot of the control unit (Slot 0, to the right of the *power supply*). Includes the software and memory that runs the system.

programming port reassignment Reassignment of the system programming jack position to any of the first five extension jacks on the first MLX module in the control unit.

protocol Set of conventions governing the format and timing of message exchanges between devices, such as an MLX telephone and the control unit.

public network Network that is commonly accessible for local or long-distance calling. Also called “public switched telephone network.”

Q

QCC (Queued Call Console) MLX-20L telephone used by a system operator in *Hybrid/PBX mode* only. Used to answer outside calls (directed to a system operator position) and inside calls, direct inside and outside calls to an extension or an outside telephone number, serve as a message center, make outside calls for users with outward calling restrictions, set up conference calls, and monitor system operation.

R

RAM (random-access memory) Computer memory in which an individual *byte* or range of bytes can be addressed and read or changed without affecting other parts of memory.

read-only memory See *ROM*.

Remote Access System feature that allows an outside caller to gain access to the system, almost as if at a system extension.

restore Procedure whereby saved and archived system programming is reinstated on the system, from a floppy disk or *memory card*. See also *backup*.

ring generator Circuit pack added to the power supply that generates a high-voltage, 20–30 Hz signal to ring a telephone.

riser cable Cable that runs between floors in a multistory building and connects wiring closets.

RS-232 Physical interface, specified by the Electronics Industries Association (*EIA*), that transmits and receives *asynchronous* data at distances of up to 50 feet (15 m).

robbed-bit signaling Signaling in which the least significant *bit* of every sixth frame per channel is used for signaling in that channel.

ROM (read-only memory) Computer memory that can be read but cannot be changed.

S

SAA (Supplemental Alert Adapter) Device that permits -48-VDC alerting equipment to be connected to an analog multiline telephone jack so that people working in noisy or remote areas of a building can be alerted to incoming calls.

SA buttons Telephone buttons that provide a single interface to users for both internal and external calling.

SDN (Software Defined Network) AT&T private networking service created by specialized software within the public network.

SID	[station (extension) identification]
simplex signaling	Transmission of signals in one direction only across a telecommunications channel.
signaling	Sending of control and status information between devices to set up, maintain, or cease a connection such as a telephone call.
single-line telephone	Industry-standard touch-tone or rotary-dial telephone that handles only one call at a time and is connected to the system via an *extension jack* on a basic 012 or 008 OPT module.
slot	Position in a *carrier* for a module; numbered from 0 (*processor module*).
SMDR	(Station Message Detail Recording) Feature that captures detailed usage information on incoming and outgoing voice and data calls.
SMDR printer	Printer used to produce SMDR reports. Connected to the system via an RS-232 jack on the *processor* module.
Software Defined Network	See *SDN*.
special character	Pause, Stop, or End-of-Dialing signal in a programmed dialing sequence such as an Auto Dial or Personal Speed Dial number.
SPM	(System Programming and Maintenance) *DOS*- or UNIX system-based application for programming and maintaining the system.
square key	Configuration in *Key mode* operation in which all outside lines appear on all telephones.
station	See *extension*.
station jack	See *extension jack*.
Station Message Detail Recording	See *SMDR*.
Supplemental Alert Adapter	See *SAA*.
switchhook flash	Momentary (320 ms to 1 second) on-hook signal used as a control signal. May be directed either to the control unit or to a *host* switch outside the system. Also called “Recall” or “timed flash.”

synchronous data transmission Method of transmitting a continuous digital data stream in which the transmission of each binary *bit* is synchronized with a master clock. See also *asynchronous data transmission*.

system acceptance test Test of all trunks, telephones, data terminals, and features after installation to ensure that they are working correctly.

System Access buttons See *SA buttons*.

system date and time Date and time that appear on MLX display telephones and *SMDR* reports.

system programming Programming of system functions and features that affect most users, performed from an MLX-20L telephone or a computer using *SPM*. See also *extension programming* and *centralized telephone programming*.

System Programming and Maintenance See *SPM*.

system renumbering Procedure used to change the numbers assigned to telephones, adjuncts, *calling group*s, paging groups, park zones. *Remote Access*, and lines/trunks.

T

T1 Type of digital transmission facility that in North America transmits at the *DS1* rate of 1.544 Mbps.

TDM (time division multiplex) Process where the transmission channel is divided.

telephone power supply unit Equipment that provides power to an individual telephone.

tie trunk Private trunk directly connecting two telephone switches. See also *automatic-start tie trunk*, *delay-dial-start tie trunk*, *immediate-start tie trunk*, and *wink-start tie trunk.*

timed flash See *switchhook flash*.

tip/ring Contacts and associated conductors of a *single-line telephone* plug or jack.

touch-tone receiver See *TTR*.

T/R See *tip/ring*.

trunk Line creating a telecommunications path between the communications system and the telephone company central office (*CO*) or another switch. Often used synonymously with *line*.

trunk jack See *line/trunk jack*.

trunk pool See *pool* and *modem pool*.

TTR (touch-tone receiver) Device used to decode *DTMF* touch-tones dialed from *single-line telephones* or *Remote Access* telephones.

U

uninterruptible power supply See *UPS*.

unit load Measure of the power load drain of a module, telephone, or *adjunct*.

UPS (uninterruptible power supply) Device that connects to the system to provide 117 VAC to the equipment when the commercial power source fails.

V

VAC Alternating-current voltage.

VDC Direct-current voltage.

VMI (voice messaging interface) An enhanced *tip/ring* port.

voice-band channel A transmission channel. generally in the 300–3400-Hz frequency band.

voice mail Application that allows users to send messages to other extensions in the system, forward messages received with comments, and reply to messages.

voice messaging interface See *VMI*.

W

WATS (Wide Area Telecommunications Service) Service that allows calls to certain areas for a flat-rate charge based on expected usage.

wink-start tie trunk *Tie trunk* on which the originating end transmits an off-hook signal and waits for the remote end to send back a signal (a wink) that it is ready for transmission.

Index

#

008 MLX, 1-4
008 OPT module, 1-51
012 module,
  forward disconnect, 1-62
  remote programming connection, 1-3
  VMI port, 1-51
016 module
  downloadable firmware, 1-61
  forward disconnect, 1-62
  ringing frequency, 4-31-4-33
1 + 7-digit dialing requirements, 4-282-4-284
100D module
  clock synchronization, 4-55-4-59
  idle state, 1-44
2-digit numbering plan, 3-13, 4-13, 4-14
2B Data option, 4-324-4-325
3-digit numbering plan, 3-13-3-14, 4-13, 4-14-4-15
355A modular adapter, 2-2
408 GS/LS-MLX module, 1-49, 1-4
5ESS, 1-49
7 x 24 display, 2-17
800 CO-BRI
  clock synchronization, 4-55-4-59
800 GS/LS-ID delay, 2-56
800 LS-ID module, 1-53
8102 and 8110 analog telephones, 1-46
9-pin to 25-pin adapter, 2-2

A

Abbreviated ringing, 5-30
Aborting
  Backup, 2-24
  Convert, 2-29
  Print, 2-47
  Restore, 2-42
Access to Allowed Lists Report, F-23
Access to Disallowed Report, F-25
Accessing centralized telephone programming, 5-2-5-3
Accessing SPM, 2-12-2-16
Account code
  programming forced account code entry, 3-97-3-98
  SMDR format, 3-170-3-171
Account Code entry, 5-12
Adapter
  355A, 2-2
  9-pin to 25-pin, 2-2
Add digits, 4-124-4-126
Alarms
  calls-in-que, 4-242
  calls-in-queue, 5-21
  maintenance, 4-205-4-206
  system, 5-13
  threshold, 4-241
Allowed lists, 4-258
  Access to Allowed Lists Report, F-23
  Allowed Lists Report, F-22
  assign lists to telephones, 3-183-3-185
  creating or changing lists, 3-181-3-183
Allowed Lists Report, F-22
ams.cfg file, 2-4, 2-5-2-6
Analog multiline telephones
  at data stations, 4-322-4-324
  copy programming, 5-8
  with voice announce to busy, 3-76-3-78, 4-198-14-99
  without built-in speakerphone (BIS), 3-74-3-76, 4-198-4-99
  without Hands Free Answer on Intercom (HFAI), 3-74-3-76, 4-198-4-199
  programming special characters, H-2
ansi.sys file, 2-4
Area Codes, A-5
Arrow keys, 2-17, 2-19
ARS, see Automatic Route Selection (ARS)
Assign
  allowed lists to telephones, 3-183-3-185, 4-259
  disallowed lists to telephones, 3-188-3-189, 4-260
  Intercom buttons, 3-66-3-74, 4-195-4-196
  System Access (SA) buttons, 3-66-3-74, 4-195-4-196
  trunks or pools to telephones, 4-191-4-193
AT&T Digital Announcer Unit, 1-52
AUDIX Voice Power, 1-48
Authorization Code Information Report, F-38
Authorization codes, 1-56, 2-56, 3-105-3-107, 3-170-3-171, 4-216, 5-13
Auto Answer All, 5-13
Auto Answer Intercom, 5-14
Auto Dial, 5-14
Auto Dial button, 1-50

autoexec.bat file, 2-4
Automated Attendant, 4-206-4-209
Automatic backup, 2-56, 3-228-3-232
Automatic Callback, 4-265-4-266, 5-15
Automatic Hold or Release, 3-32
Automatic hold or release, 4-223
Automatic Line Selection, 5-14-5-15
Automatic maintenance busy, 4-8-4-11
Automatic Route Selection (ARS)
    dial 0 table, 4-303-4-306
    digit absorption, 4-295-4-298
    extension restriction level, 3-94-3-96
    facility restriction level, 4-292-4-295
    N11 special numbers table, 4-301-4-303
    other digits, 4-299-4-301
    overview, 4-282
    pool routing, 4-306-4-308
    report, F-26
    start and stop times for subpatterns, 4-287-4-290
    tables, 4-284-4-287
    voice and/or data routing, 4-306-4-308
Automatic Route Selection Report, F-26
Auxiliary equipment
    fax machines, 3-78-3-82
    loudspeaker paging, 4-202-4-203
    maintenance alarms, 4-205-4-206
    Music on Hold, 4-200-4-201
    voice messaging systems (VMSs), 4-206-4-209

B

B-Channel Groups, 4-133-4-138
Backup
    aborted, 2-24-2-25
    description, 2-21-2-23
    directory, 2-21
    header, 2-22
    menu option, 2-16, 2-20
    position busy, 3-54-3-56
    procedure, 2-23-2-25
    to memory card, 3-225-3-228
backup.ams, 2-23
Barge-In, 5-2, 5-15
Barrier code, 1-55
Barrier codes
    changing codes, 4-275-4-276
    changing length, 4-275
    establishing requirements, 4-274
    upgrading to Release 3.0, 2-51
Basic Rate Interface (BRI)
    Directory Number, 4-185-4-187
    clock synchronization, 4-55-4-59
    enhancements to Release 4.0, 1-60
    Service Profile Identifier, 4-185-4-187
    timers, 4-187-4-190
Basic system operating conditions, 4-1-4-11
Behind Switch mode
    default Intercom buttons, 3-59
    dial codes, 3-177-3-179
    one-touch hold, 3-150
    recall timer, 3-180
BIS, see built-in speakerphone (BIS)
Block assignment, DID trunks, 4-113-4-116
Block renumbering, 3-17-3-19, 4-17-4-18
Block selection, 1-17-1-18
Board renumbering, 2-25, 4-5-4-6
Boards
    inspect, 2-25, 2-27
    menu option, 2-16, 2-20
    null, 2-25
    phantom, 2-25
    procedure, 2-26-2-27
    programming in surrogate mode, 2-59
    types, 2-26
Branching, 1-16-1-18
BRI, see Basic Rate Interface (BRI)
Browse, 2-16, 2-19, 2-28
Built-in speakerphone (BIS), 3-74-3-76
Button diagrams, D-1
Button labeling cards, 1-5
Buttons
    display, 1-5
    Fixed Feature, 1-5
    line, 1-5

C

Call
    extended completion, 3-48-3-50
    remote forwarding, 3-103-3-105, 4-216-4-217
    restrictions, 3-89-3-91, 4-212-4-213
Call Forwarding
    Delayed, 3-105-3-107
    QCC operator to receive calls, 3-39
Call Management System (CMS) mode, 3-161
Call pickup groups, 3-110-3-112, 4-231

Call types
operator to receive, 4-225-4-226
operator to receive calls, 3-39-3-43
queue priority level, 3-44-3-46, 4-226
Call Waiting, 5-16
Call-by-call service table, 4-176-4-184
Callback, 5-15-5-16
Automatic, 5-15
automatic interval, 3-160-3-161, 4-249
Selective, 5-16
Caller ID, 4-51-4-54
Calling groups
Calls-In-Que alarm, 5-21
enhancements to Release 4.0, 1-61
members, 5-22
Night Service group assignment, 1-48
supervisor, 5-21
Calls-in-queue Alarm, 5-21
Calls-in-queue alert, 3-37-3-39, 4-224-4-225
Camp-On
assigning a button, 5-16
return time, 3-156-3-157, 4-247-4-248
Canadian Department of Communications (DOC),
interference information, A-2
notification and repair information, A-5
Cancel reminder, 5-29
Cards, button labeling, 1-5
Centralized telephone programming
accessing, 5-2-5-3
menu option, 1-41
overview, 5-1-5-2
type of programming, 1-3
Channel service unit, 4-94-4-95
Clock synchronization, 4-54-4-55
CMS, see Call Management System (CMS)
Codes feature, general instructions for using, A-3
Codes, programming, 5-5-5-7
Color monitor, 2-7
COM1, 2-6, 2-7
COM2, 2-6, 2-7
Command
install, 2-4-2-5
spm, 2-4, 2-6, 2-13, 2-15
Communications port, 2-6
Compatibility, 2-50-2-51
Compressed files, 2-22, 2-29
Conference
assigning a button, 5-17
button (Conf), 1-5
config.sys file, 2-4
Configuration
attributes, 2-7-2-8
file, 2-4, 2-6
Connection procedure (PC), 2-9
Connectors, 2-2
Console
buttons, 1-6-1-7
MLX-20L, 2-17
overlay, 1-7-1-8
system programming, 2-1, 2-12, 2-17
window language, 2-34
Contrast control, 1-5
Control unit
cover, 1-51
Convert
aborted, 2-29
menu option, 2-16, 2-18
overview, 2-28-2-29
part of upgrade procedure, 2-52
procedure, 2-29-2-33
requirements for restore, 2-51
Copy
call restrictions, 3-91-3-94, 4-213-4-214
extension programming, 5-8-5-12
line/trunk assignments, 3-62-3-66, 4-194-4-195
options, 1-10
options for lines/trunks, 4-63-4-67
procedure, 5-11-5-12
telephone number to send, 4-141-4-143
Copyable features
all telephones, 5-9-5-10
Direct Line Console (DLC), 5-11
Cordless telephones, 3-58
Counters, PRI, 4-185-4-190
Coverage, 1-48
centralized telephone programming, 5-17-5-18
enhancements to Release 2.0, 1-48
group, 5-17
inside, 5-17
primary, 5-17
secondary, 5-17
turning off, 5-18
Voice Messaging Systems (VMS), 1-47-1-48, 2-55, 5-18
Coverage VMS, 1-47
Cursor movement keys, 2-17, 2-19
Customer support helpline, AT&T, A-1

D

D8W modular cord, 2-2
Data
  2B Data, 4-324-4-325
  entry, 1-12-1-13
  menu option, 1-41
Data features, 4-321
Data Status, 2-55, 5-18
Date, 3-8-3-9, 4-11
DB-25 connector, 2-2
DB-9 connector, 2-2
DEBUG attribute, 2-6
Default
  barrier codes, 2-51
  filename, 2-23, 2-42, 2-48
  language, 2-5, 2-34
  password, 2-37
Delayed Call Forwarding,
  enhancements to Release 4.0, 1-61
  programming, 3-105-3-107
Delete digits, 4-122-4-124
Delete key, 1-19
Desk stand, 1-5
Dial 0 table, 4-303-4-306
Dial mode, 4-102-4-105
Dial Plan Report, F-8
Dial plan routing, 4-158-4-167
Dial tone
  inside, 3-171-3-172
  recall timer, 3-179-3-180
  second, 3-67
Dial-out code, 3-86-3-89
Dialpad, 1-5
DID, see Direct Inward Dialing (DID)
Digit absorption, 4-295-4-298
Digital Signal 1 (DS1) facilities
  channel service unit, 4-94-4-95
  clock synchronization, 4-54-4-55
  frame format, 4-75-4-88
  line compensation, 4-92-4-93
  overview, 4-68
  report, A-14
  signaling mode, 4-90-4-91
  type of facility, 4-68-4-75
  zero code suppression, 4-88-4-89
Digits
  add, 4-124-4-126
  delete, 4-122-4-124
  expected, 4-120-4-122
Direct Group Calling Information Report, F-34
Direct Inward Dialing (DID) trunks
  add digits, 4-124-4-126
  block assignment, 4-113-4-116
  delete digits, 4-122-4-124
  disconnect time, 4-118-4-120
  emulation, 2-55
  expected digits, 4-120-4-122
  invalid destination, 4-128-4-129
  enhancements, 1-48
  signaling, 4-126-4-128
  report, A-14
  type, 4-116-4-118
Direct local connection, 2-9-2-10, 2-12-2-13
Direct Station Selector (DSS)
  attached to MLX-20L, 1-4
  buttons, 1-6
  designation cards, 1-6
  LEDs, 1-6, 1-9
  page buttons, 1-6, 4-18-4-19
Direct Voice Mail, 5-19
Direct-Line Console (DLC)
  copy programming, 5-9
  features that can be copied, 5-11
  operator automatic hold, 3-28-3-29
  operator positions, 3-23-3-25, 4-23
Directory
  extension, 3-201
  personal, 3-201
  system speed dial, 3-210
Directory Number (DN), 4-185-4-187
Disallowed lists, 4-259-4-260
  Access to Disallowed Lists Report, F-24
  assign lists to telephones, 3-188-3-189
  Disallowed Lists Report, F-23
  creating or changing lists, 3-185-3-188
  enhancements to Release 3.1, 1-58
Disallowed Lists Report, F-23
Disconnect interval, 4-39-4-42
Disconnect signaling reliability, 4-31-4-37
Disconnect time, 4-303-4-306, 4-118-4-120
Display
  buttons, 1-5
  screen, 1-5
DLC, see Direct Line Console (DLC)
Do Not Disturb, 1-48, 2-55, 5-19
DOC, see Canadian Department of Communications (DOC)
DOS-based PC, 2-1
DN, see Directory Number
Drop, 1-5, 5-19

DS1, see Digital Signal 1 (DS1) facilities
DSS, see Direct Station Selector (DSS)

E

E&M Signal, 4-100-4-102
Electromagnetic interference information, A-1
Elevate priority, 4-224
End key, 2-18
Enhancements, product, 1-45-1-62
Enter key, 2-18
Entry mode, 1-18
Equal Access Codes, A-5
Error Log Report, F-37
Escape to shell, 2-18-2-19
Exchange Codes, A-5
Exit
    key, 1-19
    menu option, 1-42
    system programming, 1-42
Expected digits, 4-120-4-122
Extended call completion, 3-48-3-50
Extension
    copy, 2-55
    copy features, 5-8-5-12
    directory, 4-313
    forced idle, 1-44, 2-45
    language, 4-210-4-211
    menu option, 1-41
    print reports, 5-4
    programming, 1-3, 5-3-5-8
    status, 4-250
Extension Directory Report, F-28
Extension Information Report, F-31
Extension Status, 5-20
Extensions
    allowed lists, 3-183
    Automatic Route Selection (ARS) restriction level, 3-94-3-96
    directory, 3-201-3-203
    directory report, F-28
    disallowed lists, 3-188
    features, 3-83-3-105
    language, 3-83-3-86
    report, F-31
    status, 3-161-3-163

F

Facility Restriction Level (FRL)
    programming, 4-292-4-295
    enhancements to Release 3.1, 1-59
Factory setting, 1-10
Fax
    assigning an extension, 3-78-3-82
    message-waiting indicator, 3-78-3-79, 3-81
Fax Attendant System, 1-48-1-49
FCC, see Federal Communications Commision (FCC)
Feature
    button, 5-20, D-1
    codes, D-3
    general use, D-1
Feature button, 1-5
Feature Table, D-3
Features,
    data, 4-321
    enhancements, 1-45-1-62
    group, 3-110, 4-229-4-236
    group calling, 3-125-3-146, 4-237-4-143
    operator, 3-26
    Queued Call Console (QCC), 3-30, 4-222
    remote access, 4-261
    summaries, 5-12-5-34
    system, 3-147-3-189, 4-244-4-245
    telephone, 3-83-3-105, 4-209-4-217
Federal Communications Commision (FCC),
    Electromagnetic Interference Informaction, A-1
    notification and repair information, A-2
    PF registration, 1-47
Ferrite cores, 1-51
Find Feature, 5-8
Fixed DSS buttons, 1-6
Fixed feature buttons, 1-5
Flash, 2-18
Flash ROM, 1-53
Flexible Numbering, 3-12
Follow Me
    Delayed Call Forwarding, 3-105-3-107
    QCC operator to receive calls, 3-39
Forced Account Code Entry, 1-50, 3-97-3-98, 4-214-4-215

Forced idle
extension, 1-44
extensions, 2-45
general, 2-44
line/trunk, 1-44
lines/trunks, 2-45
reminder tones, 1-45, 2-45-2-46
states, 1-42-1-43
system, 1-43
Forward, 5-21
Frame format, 4-75-4-88
FRL, see Facility Restriction Level (FRL)
FTS2000, 1-49
Function keys, 2-17
Function of PC keys in SPM, 2-18-2-19

G

General pickup, 5-28
General Trunk Information Report, F-15
Ground-start trunks
outmode signaling, 4-27-4-30
toll type, 4-37-4-39
reports, F-14
Group Call Pickup Report, F-37
Group calling
assigning buttons, 5-21-5-22
Call Management System (CMS) configuration, 5-20
calls-in-queue alarm threshold, 3-138-3-141, 4-241
delay announcement, 3-127-3-130, 4-237-4-238
external alert for calls-in-queue alarm, 3-141-3-143, 4-242
features, 3-125-3-146, 4-237-4-243
labeling, 3-208-3-210, 4-314-4-315
line trunk or pool assignments, 4-235-4-236
line/trunk pool assignments, 3-121-3-224
member assignments, 3-119-3-121, 4-234-4-235
message waiting indicator, 4-239-4-241
message-waiting indicator, 3-133-3-138
number based overflow, 3-132-3-133
overflow and threshold, 4-239
overflow and thresholds, 3-132-3-133
time based overflow, 3-132-3-133
type, 3-143-3-146, 4-242-4-243
Group Calling/Call Mangement System (CMS) mode, 3-161
Group coverage, 5-17
delay interval, 3-117-3-119, 4-233-4-234
member assignments, 3-114-3-117, 4-232-4-233
receiver, 3-130-3-132, 4-238-4-239
report, F-33
Group Coverage Information Report, F-33
Group Page Auto Dial Button, 5-22
Group paging, 3-112-3-114, 4-231-4-232
Group Paging Report, F-30
Groups
call pickup, 3-110-3-112, 4-231
Night Service, 3-190-3-193
GS/LS Trunk Information Report, F-14

H

HackerTracker, 1-52
Hands Free Answer on Intercom (HFAI), 1-5, 3-74-3-76
Headsets
Headset Auto Answer, 5-22
Headset Hang Up, 5-2, 5-23
Headset Mute, 5-23
Headset Status, 5-23
release enhancements, 1-5
programming buttons, 5-22-5-23
Help, 2-18, 2-20-2-21, 2-29
help files, 2-4
Helpline, AT&T, A-1
HFAI, see Hands Free Answer on Intercom (HFAI)
Hold
automatic, 3-32-3-34, 4-223
automatic, Direct-Line Console (DLC), 3-28-3-29
button, 1-5
disconnect interval, 4-39-4-42
one-touch, 3-150-3-152, 4-245-4-246
return, 3-30-3-32, 4-222-4-23
timer, 3-26-3-27, 4-329, 4-220-4-221
Home button, 1-7
Home key, 2-18
Host system
dial codes, 3-177-3-179, 4-256
transfer feature, 5-33
Hotel configuration, 5-20
Hotel mode, 3-161-3-62
Hunt type, 3-125-3-127, 4-237
Hybrid/PBX mode
default System Access (SA) buttons, 3-59
Queued Call Console, 3-21

I

I/O address, 2-3

ICLID, see Incoming Call Line Identification (ICLID)
Idle
100D module, 1-44
condition, 1-10
extensions, 1-44
lines/trunks, 1-44
reminder tones, 1-45
states, 1-42-1-43, 2-44-2-45
system, 1-43
Incoming Call Line Identification (ICLID), 1-56, 2-56, 4-51
Incoming routing, 4-144-4-145
Initialization procedure, SPM, 2-5-2-8
Inside coverage, 5-17
Inside dial tone, 3-171-3-172, 4-253-4-254
Inspect,
boards, 2-25, 2-27
display button, 1-7
key, 2-17, 2-18
screen, 1-13
Install command
options, 2-5
overview, 2-5
Installation and Operational Procedures, A-14
Installation procedure, 2-3
Integrated Administration
capabilities, 4-326
common information, 4-326
options, 4-327-4-329
set up, 4-327
Integrated Solution II, 2-1
Integrated Solution III, 2-1
Inter-digit timers, 4-257
Inter-release compatibility, 2-50-2-51
Intercom buttons
assigning, 3-66-3-74, 4-195-4-196, 5-32
programming restrictions, 5-2
Interrupt, 2-3
Invalid destination, 4-128-4-129

K

Key mode, 5-2
default Intercom buttons, 3-59
unavailable options, 4-7
Key sequences, 2-18
Keys
arrow, 2-17, 2-19
cursor movement, 2-17, 2-19
function, 2-17

L

Label Information Report, F-11
Labeling,
extension directory, 3-201-3-203, 4-314
group calling, 3-208-3-210, 4-314-4-315
lines/trunks, 3-204-3-205, 4-314
menu option, 1-41
posted message, 3-206-3-208, 4-314
programming, 3-200-3-213
system speed dial directory, 3-210-3-213, 4-315-4-316
using SPM, 3-201
using system programming console, 3-201
LANG attribute, 2-33
Language,
console window, 2-34
enhancement to Release 1.1, 1-45-1-46
extension, 3-83-3-86
menu option, 1-41, 2-16, 2-20
overview, 2-33
PC, 2-33
procedure, 2-34
programming, 2-54
report, 3-214-3-215, 4-317
Station Message Detail Recording (SMDR) report, 3-163-3-165
system, 3-6-3-8
Language selection, 1-45
Last Number Dial, 5-23
Leave Message, 1-48
Leave message, 5-24
LED display, C-1
LEDs
console, 1-5
Direct Station Selector (DSS), 1-6, 1-9
display simulation, 2-18
Liability, A-20
Limited Warranty and Limitation of Liability, A-20
Line
buttons, 1-5
compensation, 4-92-4-93
Lines/trunks
assign to telephones, 3-57-3-62
assigning to telephones, 4-191-4-193
assignments to pools, 4-54-4-63
copy assignments, 3-62-3-66
copy options, 4-63-4-67
copying assignments, 4-194-4-195
forced idle, 1-44, 2-45

group calling assignments, 3-121-3-124, 4-235-4-236
Lines/trunks, *continued*
labeling, 3-204-3-205, 4-314
menu option, 1-41
programming, 4-314
remote access assignment, 4-262-4-265
reports, F-11-F-16
tie, 4-95-4-112
type, 4-25
List Feature, 5-8
Local modem connection, 2-10-2-11, 2-13-2-16
Loop-start trunks
disconnect signaling reliability, 4-31-4-37
hold disconnect interval, 4-39-4-42
loop-start identification (LS-ID)delay, 4-51-4-54
outmode signaling, 4-27-4-30
toll type, 4-37-4-39
Loop-Start Identification (LS-ID) delay, 4-51-4-54
Loudspeaker Paging, 1-50
Loudspeaker paging, 4-202-4-203
LS-ID, see Loop-Start Identification (LS-ID)

M

Magic on Hold, 1-52, 3-152
Main menu
options, 1-40-1-41, 2-19-2-20
return to, 2-18
Maintenance
enhancements, 1-49
programming, 2-16, 2-20
Maintenance alarms, 4-205-4-206
Manual signaling, 5-31
MDC 9000, 3-58
MDW 9000 wireless telephones, 3-58
Memory card
automatic backup, 3-228-3-232
backup, 3-225-3-228, 4-333-4-334
backup error messages, 3-232-3-235
formatting, 4-332-4-333
inserting, 4-331
inserting the card, 3-224
restore, 4-335-4-338
restore error messages, 4-338-4-341
types, 3-223, 4-329-4-331
Menu button, 1-7
Menu hierarchy, B-1
MERLIN Identifier, 1-52
MERLIN II, 2-49
Message
centralized telephone programming, 5-24-5-25
leave, 5-24
light, 1-5
posted, 5-24
receiving, 5-25
remove, 5-24
send, 5-24
status buttons, 1-6
Message Center, 3-46-3-48, 4-226-4-227
Message-waiting indicator
fax, 3-78-3-79, 3-81, 4-204
group calling, 4-239-4-241
programming, 3-133-3-138
Messaging systems, 4-206-4-209
MFM, see multi-function module (MFM)
Microphone operation, 3-108-3-109, 4-215-4-216
Missed reminder, 5-29
MLC-5 cordless telephone, 3-58
MLX Display Telephones, H-4
MLX Non-Display Telephone, H-3
MLX telephones, 5-8
MLX-10DP telephone, 1-52
MLX-20L
console, 1-4-1-5, 2-17
system programming position assignment, 3-4
Mode, 1-10
Mode of operation, 4-7-4-8
Modem
processor, 1-53
speed, 2-1, 2-3, 2-18
Modular adapter
355A, 2-2
355AF, 2-2
Modular cord, D8W, 2-2
Monitor, 2-16, 2-20
More button, 1-7
Multi-function Module (MFM), 5-9
Music on Hold, 3-152, 3-57, 4-200-4-201
Mute, 1-5

N

N11 special numbers table, 4-301-4-3
National Service Assistance Center (NSAC), A-4
Network selection tables, 4-168-4-170
Network service, 4-138-4-141
New features, 2-54-2-56

Night Service, 1-48, 2-55, 4-309-4-312, 5-26
emergency allowed list, 3-194
enhancements to Release 2.0, 1-48
exclusion list, 3-194
group assignment, 3-190-3-193
menu option, 1-41
outward restriction, 3-193-3-197, 4-310-4-311
overview, 3-190
report, F-35
setting system time, 3-10
time set, 3-197-3-200, 4-311-4-312
with group assignment, 1-48, 4-309
Night Service Information Report, F-35
Notify feature, 5-26
NSAC, see National Service Assistance Center (NSAC)
Null boards, 2-25
Numbering
2-digit, 4-13
3-digit, 4-13
set up space, 4-13-4-14
Numbering plan, 4-14-4-17
2-digit, 3-13, 4-14
3-digit, 3-13-3-14, 4-14-4-15
set up space, 3-14, 4-15

O

Off-Premises Range Extender (OPRE), 1-52
One-touch transfer/one-touch hold, 3-150-3-152, 4-245-4-46
Operator
assigning Direct-Line Console (DLC) positions, 3-23-3-25, 4-23
assigning Queued Call Console (QCC) positions, 3-21-3-23, 4-22
features, 4-217-4-221
menu option, 1-41
optional features, 3-26
positions, 3-20, 4-22
primary position, 3-21
report, F-20
Queued Call Console (QCC) optional features, 3-30
Operator hold timer, 3-26-3-27, 4-220
Operator Information Report, F-20
OPRE, see Off-Premises Range Extender (OPRE)
Options
menu option, 1-41
Queued-Call Console, 3-30
telephone, 3-3-83
system, 3-147
Other digits, 4-299-4-301
Outgoing tables, 4-167-4-168
Outmode signaling, 4-27-4-30
Outside dial tone, 3-171-3-172
Overlay, 1-7-1-8

P

Page buttons
Direct Station Selector (DSS), 4-18-4-19
Page Down key, 2-18
Page Up key, 2-18
PagePac Plus, 1-53
Paging
group, 3-112-3-114, 4-231-4-232
loudspeaker, 4-202-4-203
Park
assign button, 5-26
renumbering, 3-14
return time, 3-157-3-158, 4-248
Park Zone Auto Dial, 5-27
Pass-thru
connection, 2-35-2-36
menu option, 2-16, 2-20
modem speed, 2-35
overview, 2-35-2-37
procedure, 2-36-2-37
PassageWay Solution, 1-53
Password
choosing, A-19
entering, 2-16
menu option, 2-20
overview, 2-37-2-39
procedure, 2-37-2-39
Pause character, 3-186
PC keys, 2-18-2-19
PCMCIA Card, see Memory card
Personal Directory, 1-50
Personal line
principal user, 4-42-4-45
Personal Speed Dial, 5-27
Personalized ringing, 5-29
phantom boards, 2-25
Pickup, 5-28
Planning forms, 1-2

Pools
assign to telephones, 3-57-3-62
assigning to telephones, 4-191-4-193
dial-out code, 3-86-3-89
group calling assignments, 4-235-4-236
routing, (ARS), 4-290-4-292
trunk assignment, 4-54-4-63
Port
communications, 2-6
SMDR, 2-39
Position busy backup, 3-54-3-56, 4-229
Posted message, 2-55, 3-206-3-208, 4-314, 5-24
Power supply
ferrite cores, 1-51
PRI, see Primary Rate Interface (PRI)
PRI Information Report, F-17
Primary coverage, 5-17
Primary Rate Interface (PRI)
B-channel groups, 4-133-4-138
call-by-call service table, 4-176-4-184
copy telephone number to send, 4-141-4-143
DEFINITY and, 1-52
dial plan routing, 4-158-4-167
enhancements to Release 2.0, 1-49
network selection tables, 4-168-4-170
network service, 4-138-4-141
outgoing tables, 4-167-4-168
report, F-17
special services table, 4-170-4-176
telephone number, 4-131-4-133
telephone number to send, 4-146-4-149
terminal equipment identifier, 4-155-4-158
test telephone number, 4-149-4-151
timers and counters, 4-185-4-190
upgrading to Release 2.0 or later, 2-55
Principal user
personal line, 4-42-4-45
Print
background, 2-4
extension information, 5-4
menu option, 1-41
options, 2-39
report language, 3-214
SMDR Call Report format, 3-165
system reports, 3-216-3-228
Priority
call type queue, 3-44-3-46, 4-226
elevate, 3-35-3-37, 4-224
QCC Queue, 4-45-4-48
Privacy, 5-28
Product enhancements, 1-45
Programmed Buttons, D-2-3
Programming
codes, 5-5-5-7, D-3-8
console, 1-4-1-5
enhancements, 1-45
enhancements to Release 1.1, 1-46
enhancements to Release 2.0, 1-47
extensions, 5-3-5-8
general intructions, 1-10
sequence, G-1
special characters, H-1

Q

QCC, see Queued Call Console (QCC)
Queue over threshold, 3-34-3-35, 4-223-4-224
Queued Call Console (QCC)
automatic hold or release, 3-32
call-in-queue alert, 3-37
copy programming, 5-9
extended call completion, 3-48
hold return, 3-30-3-32
operator positions, 3-21-3-23, 4-22
operator to receive calls, 3-39-3-43
optional features, 3-30
message center operation, 3-46
position busy backup, 3-52
queue over threshold, 3-34
queue priority level, 4-45-4-48
Voice Announce, 3-54-3-56

R

RAM requirements, 2-2
Recall,
feature, 5-28
timer, 4-257
button, 3-180
Recall timer, 3-179-3-181
Receiving messages, 5-25
Redirect outside calls to unassigned extension numbers, 3-174-3-177, 4-255
Release 1.0, 2-49, 2-51
Release 1.1
upgrades, 2-52-2-53
enhancements, 1-45

Release 2.0
upgrades, 2-52-2-53, 2-54-2-55
enhancements, 1-47
Release 2.1
upgrades, 2-52-2-53, 2-54-2-55
enhancements, 1-49
Release 3.0,
upgrades, 2-52-2-53, 2-56
enhancements, 1-53
Release 3.1,
upgrades, 2-56, 2-53-2-54
enhancements, 1-58,
Release 4.0,
upgrades, 2-56-2-58, 2-54
enhancements, 1-60
Release, automatic, 3-32-3-34, 4-223
Reminder
cancel, 5-29
missed, 5-29
service programming, 5-29
set, 5-29
Remote Access,
automatic callback, 4-265-4-266
barrier codes, 2-56-2-58, 4-271-4-276
enhancements, 1-55
report, F-19
trunk assignment, 4-262-4-265
with barrier codes, 4-276-4-281
without barrier codes, 4-266-4-271
Remote Access (DISA) Information Report, F-19
Remote Administration and Maintenace, A-21
Remote Call Forwarding
Delayed Call Forwarding, 3-105-3-107
with loop-start trunks, 4-35
Remote modem connection, 2-11-2-12, 2-13-2-14
Remove message, 5-24
REN, see Ringer Equivalence Number (REN)
Renumbering, 4-11-4-19
block, 3-17-3-19, 4-17-4-18
overview, 3-12-3-14
single, 3-14-3-17, 4-17
Report Contents, F-1
Report language, 4-317
Reports
directory, 2-4
language, 3-214-3-215
printing, 2-46-2-48, 3-216-3-218
Station Message Detail Recording (SMDR) Call, 3-168-3-70
Station Message Detail Recording (SMDR) format, 3-165-3-166
system, 3-213-3-221, F-1
Requirements, system, 2-2-2-3
Reset
communication port, 2-18-2-19
factory defaults, 2-40
Restart, 4-2-4-3
Restart (cold start), 2-40
Restore
conversion requirements, 2-50
from memory card, 4-335-4-338
procedure, 2-39-2-40
Restrictions
Automatic Route Selection (ARS) restriction level for extensions, 3-94-3-96
call, 3-89-3-91, 4-212-4-213
copy call, 4-213-4-214
copy call restrictions, 3-91-3-94
disallowed lists, 3-186
Night Service, 3-193-3-197
Return ring, 3-50-3-51, 4-228-4-229
Ring
delay interval, 3-159-3-160, 4-249
return, 3-50-3-51, 4-228-4-229
Ringer Equivalence Number (REN), A-3
Ringing
abbreviated, 5-30
personalized, 5-29
send ringing options, 5-30
timing, 5-30
Ringing Frequency (016 module), 4-31-4-33
Ringing/Idle Line Preference, 5-29
Rotary trunk digit transfer, 4-33-4-35
Routing
by dial plan, 4-158-4-167
voice and data, 4-306-4-308

S

SA, see System Access (SA)
Saved Number Dial, 5-31
Screens
data entry, 1-12
information, 1-11
menu selection, 1-11-1-12
Second Dial Tone Timer, 1-58, 4-33-4-34
Secondary coverage, 5-17
Security
system, 4-261-4-62

Security Hints
choosing passwords, A-19
description, A-16
educating users, A-16-18
establishing a policy, A-18
limiting Outcalling, A-19
physical security, A-19
Security information, A-9
Select system numbering plan, 4-14-4-17
Selective Callback, 5-15, 5-16
Send message, 5-24
Send Ringing Options, 5-30
Send/Remove Message, 5-31
Serial port, 2-2
Service Profile Identifier (SPID), 4-185-4-187
Set reminder, 5-29
Set system date, 4-11
Set system time, 4-170-4-176
Set up space numbering, 4-13-4-14
Set up space numbering plan, 3-14, 4-15
Shared System Access (SSA), 1-56
Shared System Access (SSA) buttons, 5-32
Shell command (DOS), 2-6, 2-19
Signaling, 4-126-4-28
manual, 5-31
mode, 4-90-4-91
outmode, 4-27-4-30
reliability, 4-31-4-37
Single renumbering, 3-14-3-17, 4-17
Single-Line Telephones, A-1-2
Single-line telephones, 5-9
SMDR, see Station Message Detail Recording (SMDR)
Speakerphone operation, 3-108-3-109
Special characters,
analog-multiline telephones, H-2
MLX Display telephones, H-4
MLX Non-Display telephone, H-3
single-line sets, H-1
Special services table, 4-170-4-76
Specific pickup, 5-28
Speed dial
directory, labeling, 3-210-3-213
personal, 5-27
system, 5-33
Speed dial directory
labeling, 4-315-4-316
programming, 5-33
SPID, see Service Profile Identifier (SPID)
SPM
additional functionality, 2-1
directories, 2-4
display screen, 2-17-2-18
enhancements to Release 1.1, 1-46
enhancements to Release 4.0, 1-62
help, 2-20-2-21
Main Menu, 2-19-2-20
password, 1-62
versions, 2-52-2-53
spm
command, 2-1, 2-6, 2-13, 2-15
options, 2-6
SSA, see Shared System Access (SSA)
Star Codes, 1-58
second dial tone, 4-33-4-34
Start and stop times for subpatterns, 4-287-4-290
Station Message Detail Recording (SMDR)
account code format, 3-170-3-171
call length, 3-166-3-168
call report format, 3-165-3-166
calls recorded, 3-168-3-170
language, 3-163-3-165
Support telephone number, A-1
Surrogate mode programming, 2-56-2-59
Switched 56 Data Service, 4-68, 4-70, 4-80
Dial Plan Routing, 4-82
Switched 56 Dial Plan Routing, 4-82
Switchhook, 1-48
Switchhook flash, 2-18
System
backing up programming to a memory card, 3-225-3-228
date, 3-8-3-9, 4-11
enhancements, 1-45
features, 3-147-3-89
forced idle, 1-43
language, 3-6-3-8, 4-4-4-5
mode, 4-7-4-8
numbering, 3-12-3-14
numbering plan, 4-14-4-17
operating conditions, 3-4, 4-1-4-11
operator positions, 3-20, 4-22
programming position assignment, 3-4-3-5
renumbering, 3-12-3-14, 4-11-4-19
reports, 3-213-3-221
requirements, SPM, 2-2-2-3
restart, 4-2-4-3
security, 4-261-4-262
speed dial directory, 3-210-3-213
time, 3-10-3-11, 4-170-4-176
warranty, A-20

System Access (SA) buttons
assigning, 3-66-3-74, 4-195-4-196, 5-32
programming restrictions, 5-2
shared, 5-32
type, 5-32
System Directory Report, F-29
System Erase (frigid start), 2-40, 2-59
System features, 4-244-4-245
System planning forms, 1-2, 1-10
System programming
console, 2-1, 2-12
jack, 2-9
main menu, 3-3
menu, 2-44
position assignment, 4-3-4-4
procedure, 2-43-2-44
System Programming and Maintenance (SPM),
enhancements to Release 1.1, 1-46
international release, 1-52
System Reports,
samples, F-1
printing, 3-214
System restart, 4-2-4-3
System Speed Dial, 5-33

T

T1, see also, 100D module
Switched 56 Dial Plan Routing, 4-82
type of emulation, 4-68
Tables
Automatic Route Selection (ARS), 4-284-4-287
call-by-call service, 4-176-4-184
dial 0, 4-303-4-6
N11 special numbers, 4-301-4-303
network selection, 4-168-4-170
outgoing, 4-167-4-168
special services, 4-170-4-176
Telephone number to send, 4-141-4-143, 4-146-4-149
Telephone number, PRI channel, 4-131-4-133
Telephone Programming, D-8
Telephones, 4-184-4-199
cordless or wireless, 3-58
features, 3-83-3-105
programming, 3-57
single-line, 1-53
Terminal emulation type, 2-37
Terminal equipment identifier, 4-155-4-158
Test telephone number, 4-149-4-151
Tie Trunk Information Report, F-13
Tie trunks
answer supervision time, 4-107-4-110
dial tone, 4-105-4-107
direction, 4-96-4-98
Switched 56 Data Service, 4-68, 4-80
type, 4-98-4-100
Time, 3-10-3-11, 4-170-4-176
Time set
Night Service, 3-197-3-200
Timed ringing, 5-30
Timers
BRI, 4-187-4-190
inter-digit, 3-181
Night Service, 3-197
operator hold, 3-26
PRI, 4-185-4-190
recall, 3-179-3-181
second dial tone, 4-33
tmp directory, 2-4
Toll fraud
detecting, A-17
preventing, A-9, 4-261-4-262
Toll type, 4-37-4-39
Transfer
assigning a button, 5-33
audible, 3-152-3-154, 4-246-4-247
one-touch, 3-150-3-152, 4-245-4-246
return time, 3-147-3-149, 4-245
type, 3-154-3-156, 4-247

U

Uncompressed files, 2-22
UNIX system PC, 2-1
Upgrade
overview, 2-48-2-49
procedure, 2-52-2-53
requirements, 2-50

V

VMSs, see Voice messaging systems (VMSs)
Voice and/or data routing, 4-306-4-308
Voice Announce, 5-33
Voice Announce for the Queued Call Console, 3-54-3-56
Voice mail coverage, 2-55

Voice messaging systems (VMSs)
coverage, 5-18
programming ports, 4-206-4-209
security risk, A-12

W

Warranty, A-20
Welcome screen, 2-50
Wildcards, 3-186
Wireless telephones, 3-58

Z

Zero code suppression, 4-88-4-89